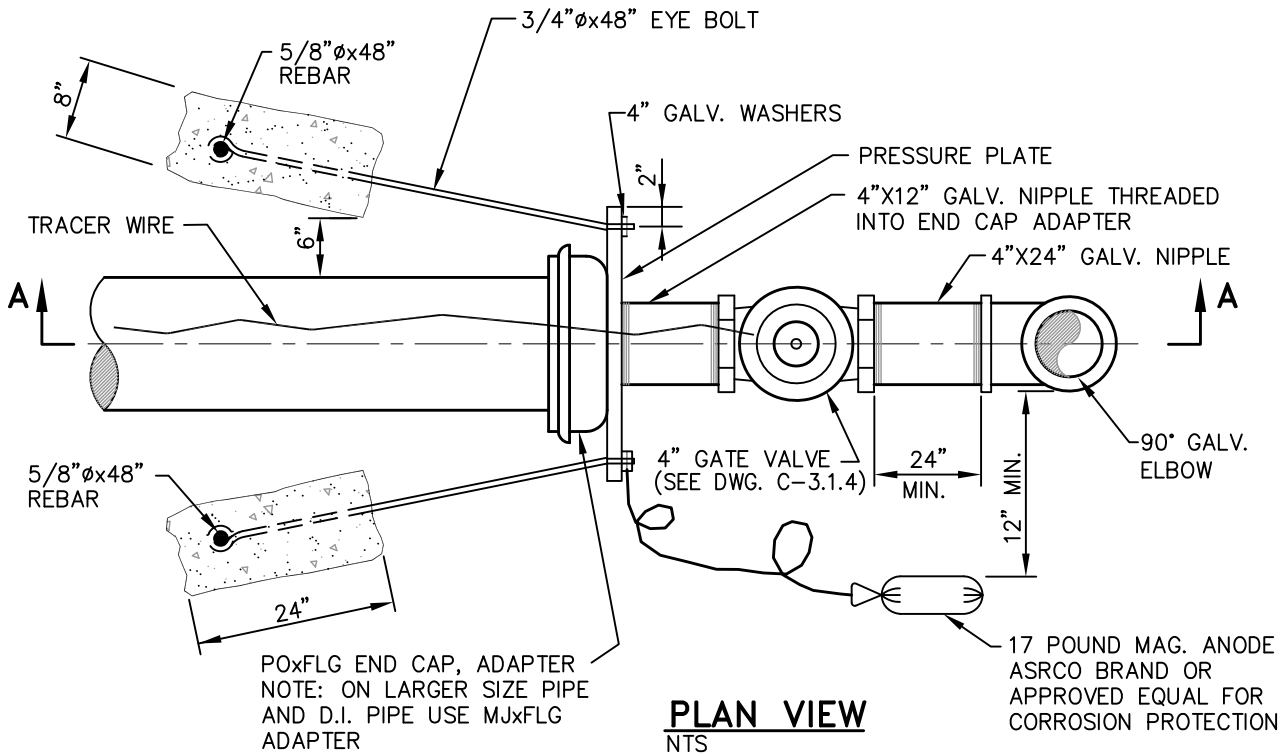

PLAN VIEW
NTS

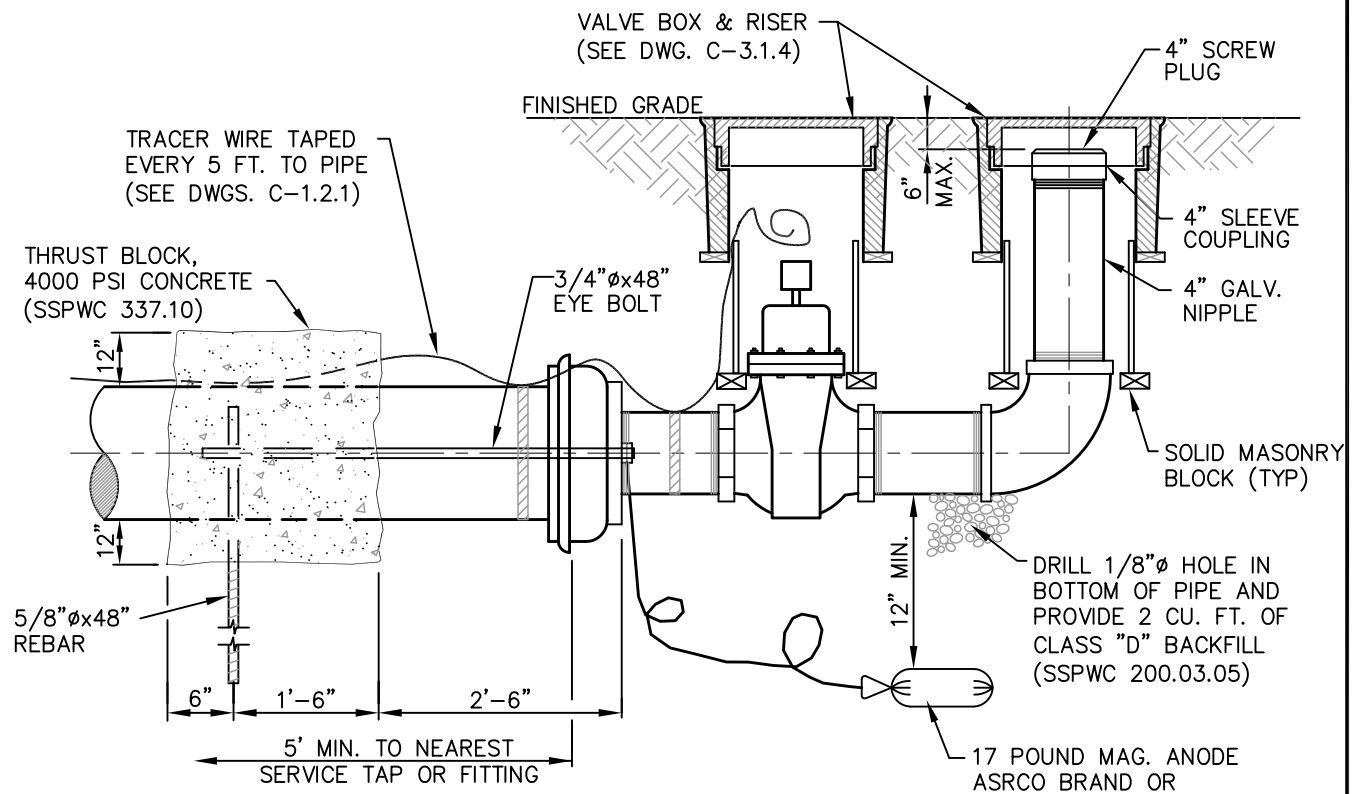

SECTION A-A
NTS

NO.	REVISION	DATE	STANDARD DETAIL FOR PUBLIC WORKS CONSTRUCTION	SECTION CARSON CITY
			FLUSH ASSEMBLY PERMANENT	DRAWING NO. C-3.1.12 (203,307)
				DATE 7/2009
APPROVED BY:		07/09		