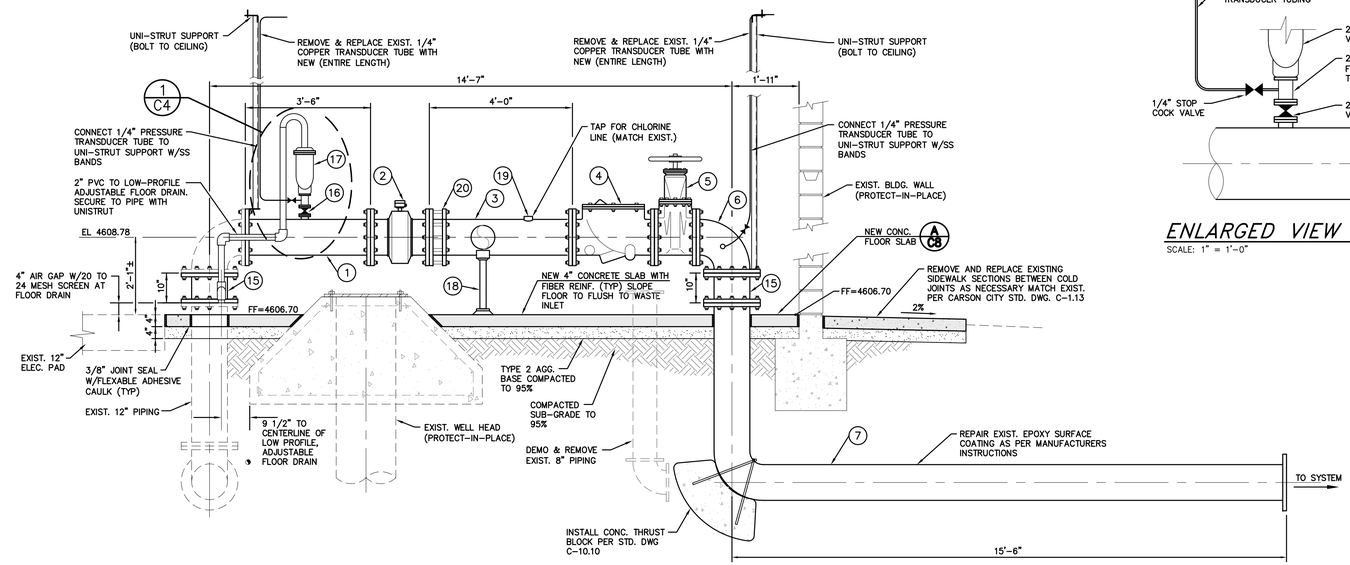

PIPING ELEVATION (A/C4)
SCALE: 1/2" = 1'-0"

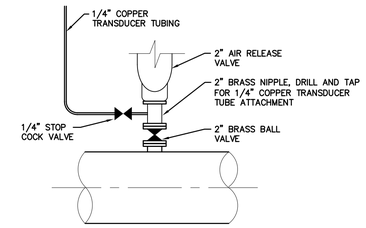

ENLARGED VIEW (1/C4)
SCALE: 1" = 1'-0"

MATERIAL LIST

ITEM	QUANTITY	DESCRIPTION
1	1	12" WELDED STEEL PIPE, SCH 40, FUSION BONDED EPOXY LINED & COATED FLGxFLG
2	1	12" "FOXBORO" FLOW METER
3	1	12" WELDED STEEL PIPE W/FUSION BONDED EPOXY COATING
4	1	12" "SURGE BUSTER" VALMATIC CHECK VALVE
5	1	12" GATE VALVE FLGxFLG
6	1	12" – 90° ELBOW FLGxFLG
7	1	12" WELDED STEEL PIPE W/FUSION BONDED EPOXY COATING (PROVIDED BY CARSON CITY)
8	1	8"x8" D.I. TEE FLG
9	2	8" GATE VALVE FLGxFLG
10	1	8" PUMP CONTROL VALVE
11	2	8" ROMAC FLANGED COUPLING ADAPTER (FCA)
12	6	8" – 90° WELDED STEEL ELBOW
13	6	8" WELDED STEEL SPOOL SECTION
14	1	8"x8" WELDED STEEL TEE
15	2	12"x27" WELDED STEEL PIPE, SCH 40, FUSION BONDED EPOXY LINED & COATED FLGxFLG
16	1	2" BALL VALVE
17	1	2" AIR RELEASE VALVE (ARV) (RE-USE EXIST.)
18	2	ADJUSTABLE PIPE SUPPORT
19	1	CHLORINATION SYSTEM (RE-CONNECT EXIST.)
20	1	12" ROMAC FLANGED COUPLING ADAPTER (FCA)
~~21~~	~~2~~	~~1/2" MIP x PLAIN SPOUT SAMPLING TAP~~
22	3	ZURN MODEL FD-2322 LOW PROFILE ADJUSTABLE FLOOR DRAIN
~~23~~	~~1~~	~~BRASS HOSE BIB W/ VACUUM BREAKER~~
24	1	8" TIDEFLEX SERIES 35 FLANGED CHECK VALVE

NOTES:

THIS MATERIAL LIST IS FOR GENERAL CONVENIENCE ONLY AND BY NO MEANS SHOULD BE INTERPRETED AS 100% COMPLETE. THE CONTRACTOR IS RESPONSIBLE FOR ALL ITEMS AND QUANTITIES AS SHOWN ON THE PLANS.

ALL ABOVE GRADE PLUMBING SHALL BE PAINTED FEDERAL SAFETY BLUE. ALL COLORS SHALL BE APPROVED BY CARSON CITY BEFORE WORK IS PERFORMED.

ALL NEW PIPELINE SHALL BE PRESSURE TESTED AND DISINFECTED PER AWWA STD C651 AND C605.

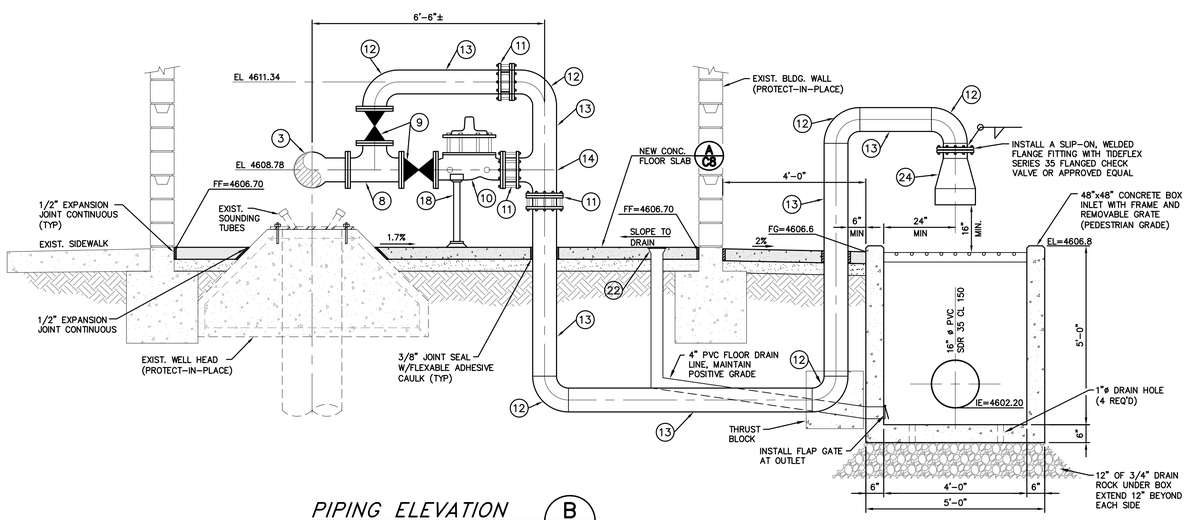

PIPING ELEVATION (B/C4)
SCALE: 1/2" = 1'-0"

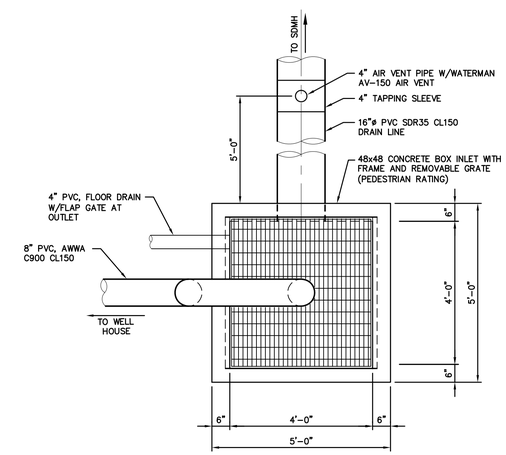

FLUSH TO WASTE STRUCTURE (2/C7)
SCALE: 1/2" = 1'-0"

Call before you Dig
Avoid cutting underground utility lines. It's costly.
Call 811 OR 1-800-227-2600

DESIGNED BY: DR/MB
DRAWN BY: DO/DR
CHECKED BY: MB
DWG NO.: 07-60038S1.DWG
SCALE (HORIZ): NOTED
SCALE (VERT): NA
PLOT DATE: 1-11-10

CARSON CITY
PUBLIC WORKS DEPARTMENT
3505 BUTTI WAY CARSON CITY, NEVADA 89701
PH: 887-2355 FAX: 887-2112

PROFESSIONAL ENGINEER – STATE OF NEVADA
MARK BRETHAUER
Exp: 12/31/10
CIVIL
No. 10102

REV.	DATE	DESCRIPTION	BY	APP'D

CARSON CITY PRODUCTION WELL #24
PHASE II UP-GRADES
PROJECT No. 4.0703
PIPING DETAILS

SHEET C4 OF 22