14

CODES:

2006 INTERNATIONAL BUILDING CODE (06 I.B.C.)
2006 INTERNATIONAL ENERGY CONSERVATION CODE (06 IECC)
2006 INTERNATIONAL FIRE CODE (06 IFC)
2006 UNIFORM MECHANICAL CODE (06 UMC)
2006 UNIFORM PLUMBING CODE (06 UPC)
2005 NATIONAL ELECTRICAL CODE (05 NEC)
2007 NORTHERN NEVADA AMENDMENT PACKAGE
ICC/ANSI A117.1-2003 ACCESSIBLE AND USEABLE BUILDINGS AND FACILITIES

PROJECT ELEVATION	4,737
ROOF SNOW LOAD	20 LBS (EXISTING)
LATERAL LOADS	WIND 105 MPH FASTEST WIND SPEED OR 3 SECOND GUST EXPOSURE C SEISMIC CATEGORY D
OCCUPANCY CLASSIFICATION:	A-1
OCCUPANT LOAD: THEATER	714
GYM	2000 POSTED @ 1000
MEETING	738
TOTAL	3452
CONSTRUCTION TYPE:	I-A
FIRE ALARM	YES
FIRE SPRINKLERS	NO
BASIC ALLOWABLE FLOOR AREA:	UNLIMITED
THEATER	18,965 SF
GYM	17,275 SF
TOTAL FLOOR AREA:	36,240 SF
BUILDING HEIGHT	42'-6" (ONE STORY W/ MEZZ)
DISTANCE FROM PROPERTY LINES	
NORTH	90.00'
SOUTH	70.00'
EAST	135.00'
WEST	15.00'
MIXED OCCUPANCY SEPARATION	NONE
EXTERIOR WALL AND OPENING PROTECTION:	
BEARING	ONE-HOUR LESS THAN 30 FEET > 10 FEET
NONBEARING	SAME AS BEARING
OPENINGS	25 % UNPROTECTED GREATER THAN 15 FEET TO 20 FEET

13

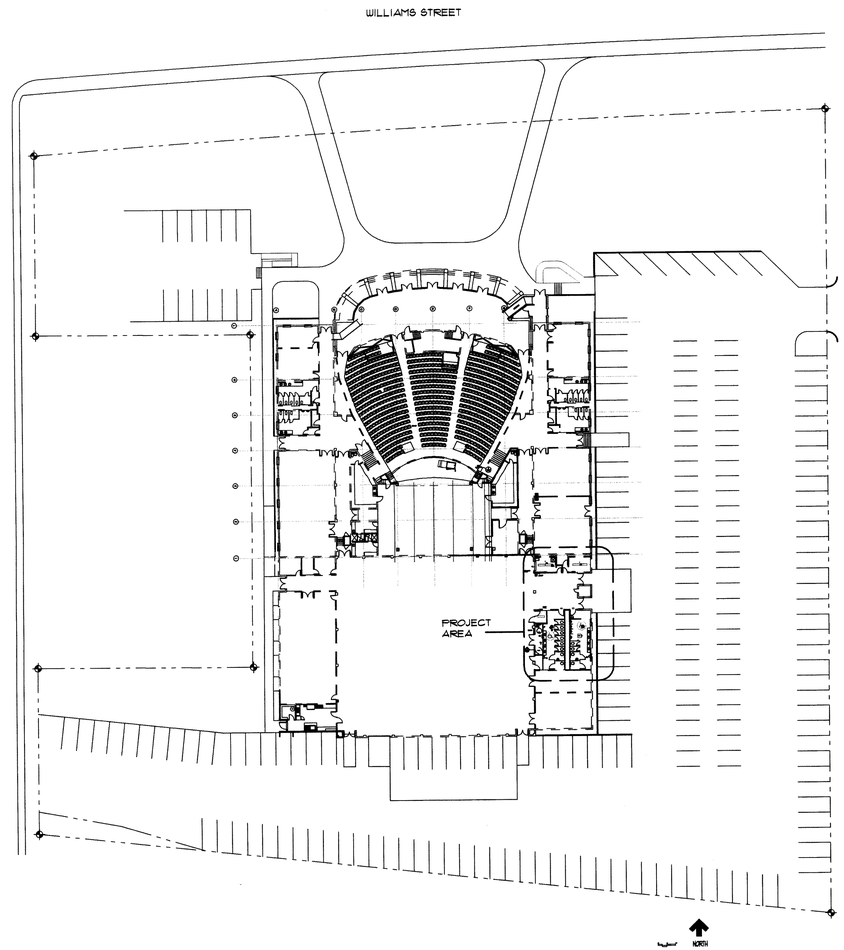

SITE PLAN 1"=40'-0" 5

CARSON CITY COMMUNITY CENTER ADA IMPROVEMENTS

851 WILLIAMS STREET
CARSON CITY, NEVADA

MECHANICAL
ASPEN ENGINEERING
5474 LONGLEY LN #200
RENO, NEVADA
(775) 826-6061

ARCHITECT
J.P. COPOULOS, ARCHITECT
P.O. BOX 2517
CARSON CITY, NEVADA
(775) 885-7907

ELECTRICAL
PK ELECTRICAL, INC
681 SIERRA ROSE DR
RENO, NEVADA
(775) 826-9010

4

* THIS PERMIT DOES NOT INCLUDE INTERIOR DEMOLITION. SEE PERMIT # 10-731 FOR THAT PORTION OF WORK.

APPROVED BUILDING PLAN AND PERMIT INSPECTION CARDS MUST BE ON JOB SITE. STREET ADDRESS REQUIRED AND MUST BE CLEARLY VISIBLE. FAILURE TO PROVIDE THE ABOVE ITEMS COULD CAUSE DELAY IN INSPECTION.

REVIEWED FOR SUBSTANTIAL CODE COMPLIANCE
CARSON CITY BUILDING DIVISION

BUILDING	9/8/10
PLANNING	K Green by spare
ENGINEERING	R Hogan
FIRE DEPT	D Lemons
ECA	M Irwin
HEALTH	N/A

SIGNATURE DATE

THE ISSUANCE OF A PERMIT BASED UPON PLANS, SPECIFICATIONS AND OTHER DATA SHALL NOT PREVENT THE BUILDING OFFICIAL FROM THEREAFTER REQUIRING THE CORRECTION OF ERRORS IN SAID PLANS, SPECIFICATIONS AND OTHER DATA.

3

INDEX TO DRAWINGS

ARCHITECTURAL

A100 COVER SHEET/ LOCATION MAP/ CODE DATA
A101 DEMOLITION PLAN
A200 REMODEL PLAN
A201 DETAILS, INTERIOR ELEVATION
A202 REFLECTED CEILING PLAN
A300 ARCHITECTURAL SPECIFICATION

MECHANICAL

M1.1 MECHANICAL PLAN
M2.1 MECHANICAL SCHEDULES
MP1.1 MECHANICAL SPECIFICATIONS
MP1.2 MECHANICAL SPECIFICATIONS

PLUMBING

P0.1 PLUMBING DEMO PLAN
P1.1 PLUMBING PLAN
P2.1 PLUMBING SCHEDULES

ELECTRICAL

E1 ELECTRICAL SPECIFICATION
E2 DEMOLITION ELECTRICAL PLAN
E3 LIGHTING PLAN
E4 POWER & SIGNAL PLAN

2

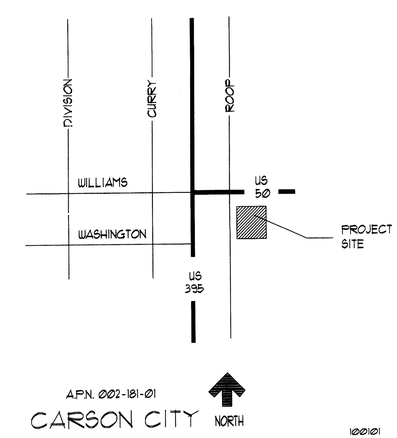

A.P.N. 002-181-01
CARSON CITY

100101

LOCATION MAP NO SCALE 1

J.P. COPOULOS ARCHITECT

P.O. Box 2517
Carson City
Nevada
89702

T 775-885-7907
F 775-885-6806

www.jpcarchitect.com

JOHN P. COPOULOS REGISTERED ARCHITECT STATE OF NEVADA
8/25/10

Project Address:
851 East Williams St
Phone 775-887-2290
Fax 775-887-2256

Owner:
Carson City Parks & Rec Dept
3303 Butti Way Bldg #9
Carson City, Nv 89701
Phone 775-887-2262
Fax 775-887-2145
Rmoellendorf@carson.org

Mechanical Engineer
Aspen Engineering
5474 Longley Lane #200
Reno, NV 89511
Phone: (775) 826-6061
Fax: (775) 826-1228
e-mail: mail@aspenreno.com

Electrical Engineer
PK Electrical
681 Sierra Rose Dr. Suite B
Reno, NV 89511
Phone: (775) 826-9010
Fax: (775) 826-9030
e-mail:
kpurcell@pkelectrical.com

No.	Description	Date

CARSON CITY COMMUNITY CENTER ADA IMPROVEMENTS

COVER SHEET

Project number	
Date	8-11-10
Drawn by	JPC
Checked by	JPC

A100

Scale 1/4" = 1'-0"

10-708 851 E Williams St

15 12 9

14 11

13 10 7

GENERAL NOTES

1. VERIFY ALL UTILITY INFORMATION PRIOR TO START OF DEMOLITION
2. COORDINATE DEMOLITION WORK WITH OWNER. PROVIDE PROTECTION TO EXISTING SURFACES TO REMAIN
3. PROVIDE BARRACADES TO PROTECT OCCUPANTS FROM ADJACENT DEMOLITION
4. PROVIDE PLASTIC OR OTHER PROTECTION TO MINIMIZE DUST IN OCCUPIED SPACES
5. PATCH TO MATCH ALL SURFACES DAMAGED FROM DEMOLITION AND REMODEL WORK TO PROVIDE FINISHED APPEARANCE.
6. VERIFY ALL DIMENSIONS, REPORT ANY DISCREPANCIES TO THE ARCHITECT.

DEMOLITION SCHEDULE

ITEM	REMOVAL BY: CONTRACTOR	OWNER	REMOVE FROM SITE	SALVAGE TO OWNER	REUSE IN REMODEL	ITEM TO REMAIN IN PLACE PROTECT FROM DAMAGE
1 WALL	//		//			
2 CEILING	//		//			
3 ELECTRICAL	//		//			
4 CONCRETE SLAB	//		//			
5 PLUMBING FIXTURE	//		//			
6 ELECTRICAL FIXTURE	//					//
7 ELECT POWER/SIGNAL	//		//			
8 PLUMBING FIXTURE	//				//	
9 DOOR	//			//		
10 COUNTER	//		//			
11 MECH DIFFUSER	//		//			
12 ELECTRIC HAND DRYER	//				//	

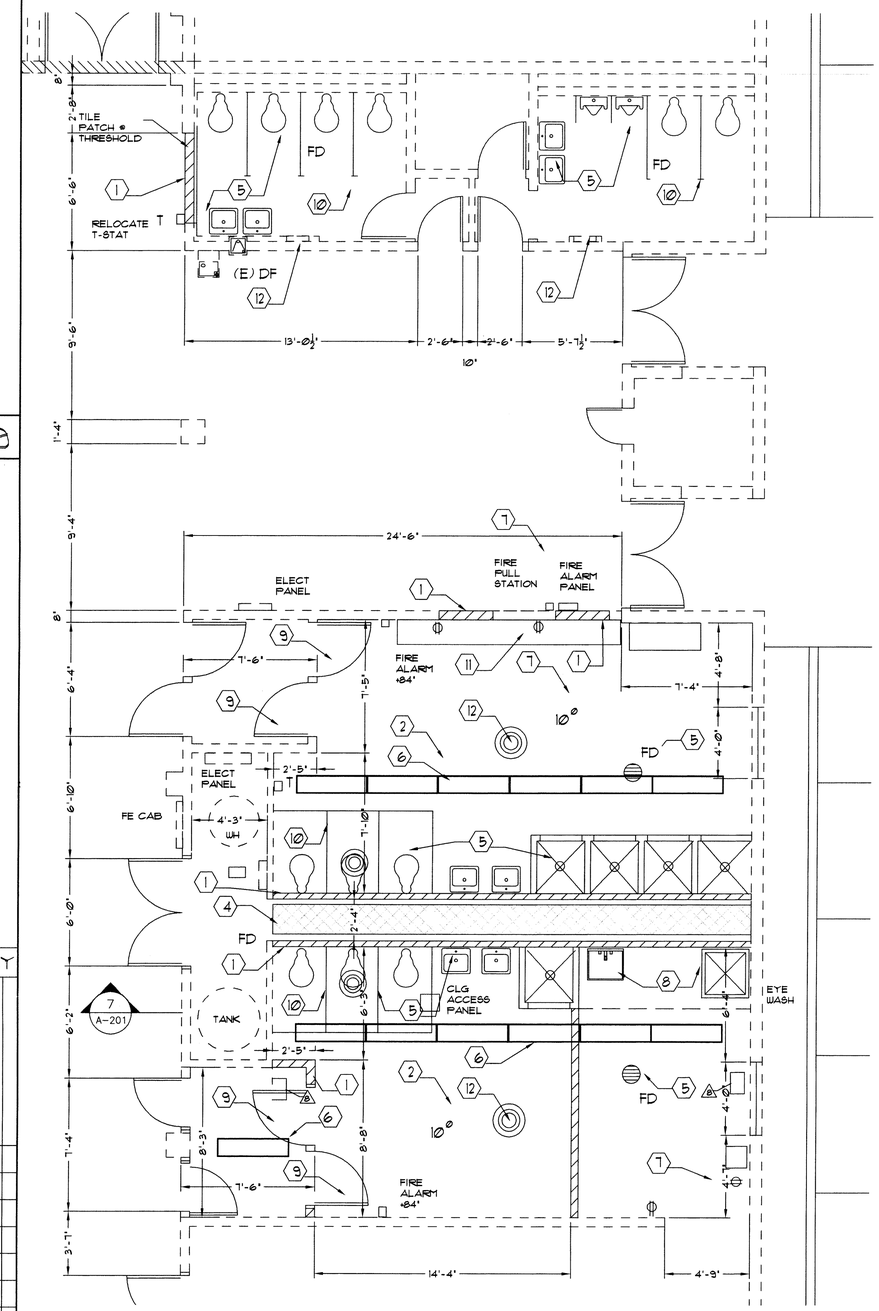

DEMOLITION PLAN 1/4" = 1'-0" 1

J.P. COPOULOS ARCHITECT

P.O. Box 2517
Carson City
Nevada
89702

T 775-885-7907
F 775-885-6806

www.jpcarchitect.com

JOHN P. COPOULOS REGISTERED ARCHITECT STATE OF NEVADA
9/25/10

Project Address:
851 East Williams St
Phone 775-887-2290
Fax 775-887-2256

Owner:
Carson City Parks & Rec Dept
3303 Butti Way Bldg #9
Carson City, Nv 89701
Phone 775-887-2262
Fax 775-887-2145
Rmoellendorf@carson.org

Mechanical Engineer
Aspen Engineering
5474 Longley Lane #200
Reno, NV 89511
Phone: (775) 826-6061
Fax: (775) 826-1228
e-mail: mail@aspenreno.com

Electrical Engineer
PK Electrical
681 Sierra Rose Dr. Suite B
Reno, NV 89511
Phone: (775) 826-9010
Fax: (775) 826-9030
e-mail:
kpurcell@pkelectrical.com

No.	Description	Date

CARSON CITY COMMUNITY CENTER ADA IMPROVEMENTS

DEMOLITION PLAN

Project number	
Date	8-11-10
Drawn by	JPC
Checked by	JPC

A101

Scale 1/4" = 1'-0"

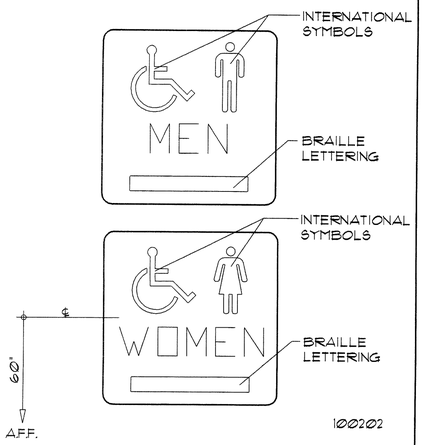

HANDICAP SIGNS 3"=1'-0" | 15

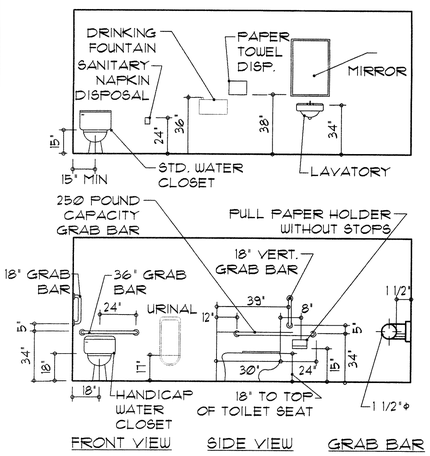

MTG. HGTS. 1/4"=1'-0" | 14

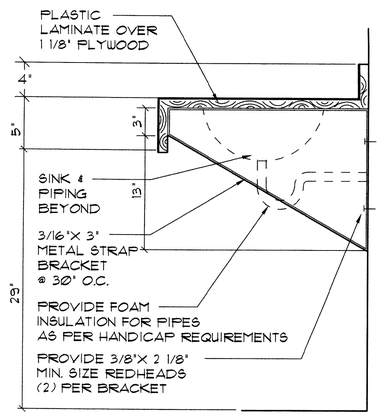

TOILET COUNTER 1 1/2"=1'-0" | 11

FINISH KEY	FLOOR	BASE	WALLS	CEILING	REMARKS
A	TILE	4" TILE	GYPSUM BOARD	GYPSUM BOARD	48" HIGH FRP WAINSCOTT
B	(E) CONC	4" RUBBER	GYPSUM BOARD	GYPSUM BOARD	
C	EXIST TILE	EXIST TILE	EXIST GYP BD	EXIST GYP BD	PATCH TILE @ DEMO
D	EXIST CONC	EXIST	EXIST GYP BD	EXIST GYP BD	
E					
F					

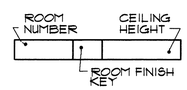

100220

ROOM FINISH LEGEND | 8

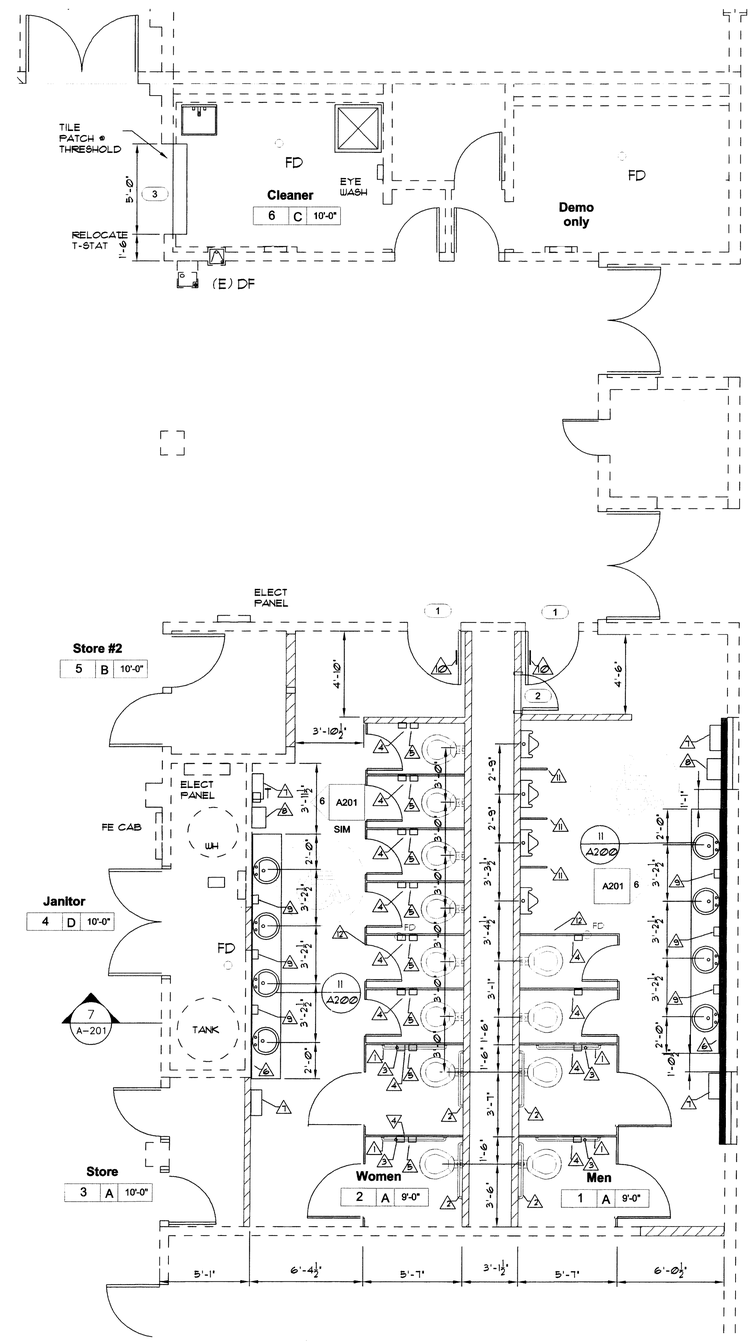

REMODEL FLOOR PLAN 1/4"=1'-0" | 1

ACCESSORIES SCHEDULE

1. 48" GRAB BAR
2. 36" GRAB BAR
3. 18" VERTICAL GRAB BAR
4. TOILET PAPER DISPENSER (BY OWNER)
5. SANITARY NAPKIN DISPOSAL (BY OWNER)
6. 32" W X 42" H MIRROR (EACH SINK)
7. PAPER TOWEL DISPENSER (BY OWNER)
8. ELECTRIC HAND DRYER (FROM DEMOLITION)
9. SOAP DISPENSER (BY OWNER)
10. HANDICAP SIGN SEE 9/A2.1

100016

HARDWARE SETS

1. 1 1/2 PAIR BUTTS (BALL BEARING)
   BEST 9K SERIES 15 D TRIM
   WALL STOP - GYLNN- JOHNSON
2. 1 1/2 PAIR BUTTS (BALL BEARING)
   PUSH-PULL - GLYNN- JOHNSON
   WALL STOP - GYLNN- JOHNSON
   CLOSER - LCN

HARDWARE FINISH
SATIN CHROMIUM 26D

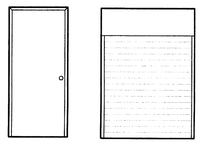

DOOR SCHEDULE

DOOR NO.	SIZE W	SIZE H	SIZE T	TYPE	DETAIL	FRAME	REMARKS	HARDWARE
1	3'0"	6'8"	1 3/4	A	1/A201	HM		2
2	2'0"	6'8"	1 3/4	A	1/A201	HM		1
3	5'0"	8'0"	1 3/4	B	2/A201 & 3/A201	MTL		- -

DOOR TYPES 1/4"=1'-0" | 10

WALL LEGEND

EXISTING 8" CONCRETE MASONRY
3 5/8" METAL STUDS @ 16"oc
WITH R-11 ACOUSTIC INSULATION
5/8 " GYPSUM BOARD ONE SIDE

EXISTING 2 X 4 WOOD STUDS @ 16"oc
W/ 5/8 " GYPSUM BOARD EACH SIDE

3 5/8" METAL STUDS @ 16"oc
WITH R-11 ACOUSTIC INSULATION
5/8 " GYPSUM BOARD EACH SIDE
1/2" PLYWD TLT SIDE OF PLUMBING CHASE

CONTRACTOR OPTION: 2 X 4 WOOD
STUDS @ 16" O.C

GENERAL NOTES

1. PATCH TO MATCH ALL SURFACES DAMAGED FROM DEMOLITION AND REMODEL WORK TO PROVIDE FINISHED APPEARANCE.
2. VERIFY ALL DIMENSIONS, REPORT ANY DISCREPANCIES TO THE ARCHITECT.

100200

13 | 7

J.P. COPOULOS ARCHITECT (C)

P.O. Box 2517
Carson City
Nevada
89702

T 775-885-7907
F 775-885-6806

www.jpcarchitect.com

JOHN P. COPOULOS REGISTERED ARCHITECT STATE OF NEVADA
8/25/10

Project Address:
851 East Williams St
Phone 775-887-2290
Fax 775-887-2256

Owner:
Carson City Parks & Rec Dept
3303 Butti Way Bldg #9
Carson City, NV 89701
Phone 775-887-2262
Fax 775-887-2145
Rmoellendorf@carson.org

Mechanical Engineer
Aspen Engineering
5474 Longley Lane #200
Reno, NV 89511
Phone: (775) 826-6061
Fax: (775) 826-1228
e-mail: mail@aspenreno.com

Electrical Engineer
PK Electrical
681 Sierra Rose Dr. Suite B
Reno, NV 89511
Phone: (775) 826-9010
Fax: (775) 826-9030
e-mail:
kpurcell@pkelectrical.com

No.	Description	Date

CARSON CITY COMMUNITY CENTER ADA IMPROVEMENTS

FLOOR PLAN

Project number	
Date	8-11-10
Drawn by	JPC
Checked by	JPC

A200

Scale 1/4" = 1'-0"

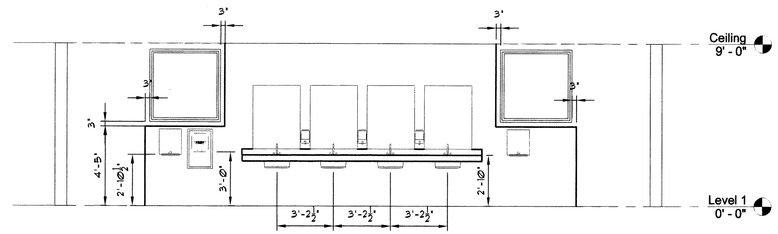

15 — 12 — SINK ELEVATION 1/4"=1'-0" — 6

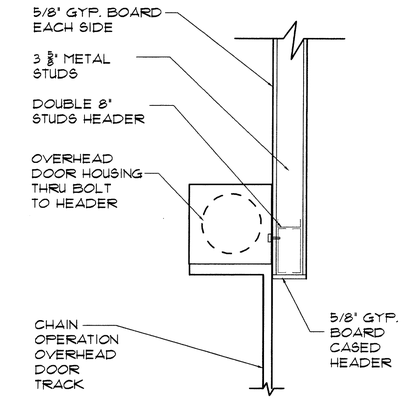

ROLLING DOOR HEAD 1"=1'-0" — 3

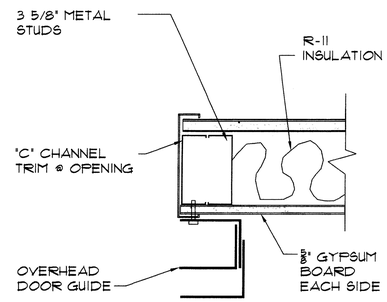

14 — 5 — ROLLING DOOR JAMB 3"=1'-0" — 2

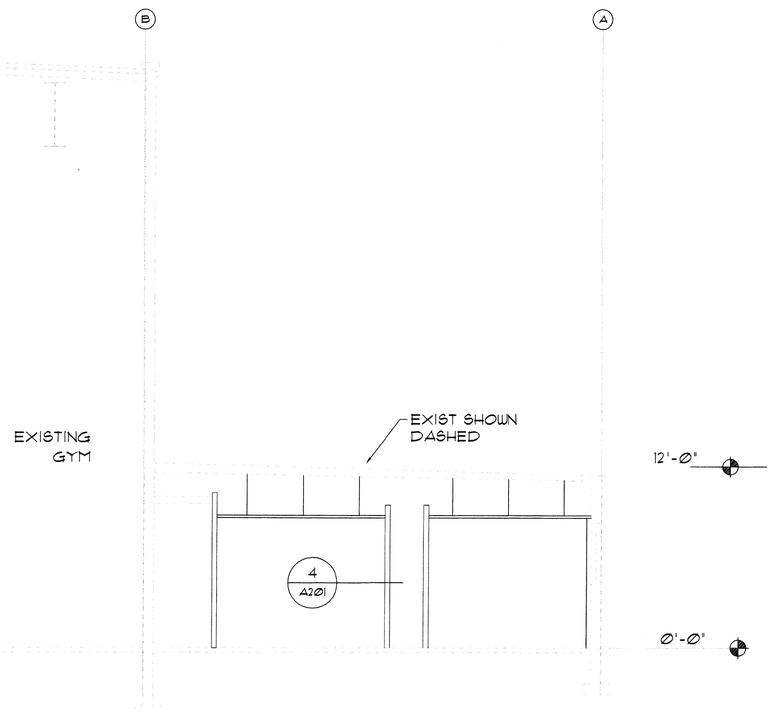

13 — BUILDING SECTION 1/4"=1'-0" — 7

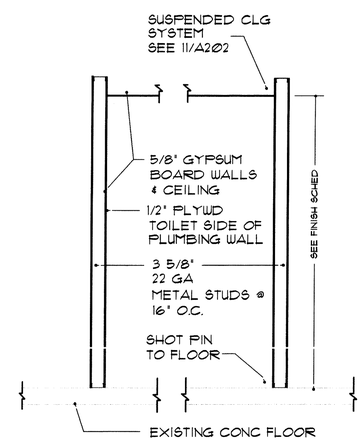

WALL SECTION 1/2"=1'-0" — 4

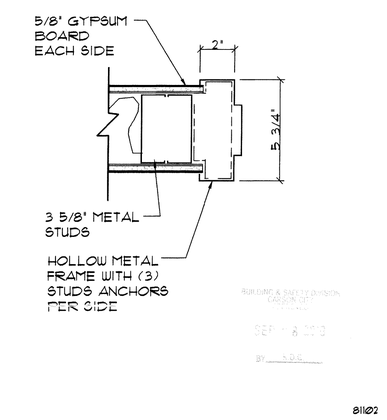

JAMB DETAIL 3"=1'-0" — 1

J.P. COPOULOS ARCHITECT

P.O. Box 2517
Carson City
Nevada
89702

T 775-885-7907
F 775-885-6806

www.jpcarchitect.com

JOHN P. COPOULOS REGISTERED ARCHITECT STATE OF NEVADA
8/25/10

Project Address:
851 East Williams St
Phone 775-887-2290
Fax 775-887-2256

Owner:
Carson City Parks & Rec Dept
3303 Butti Way Bldg #9
Carson City, Nv 89701
Phone 775-887-2262
Fax 775-887-2145
Rmoellendorf@carson.org

Mechanical Engineer
Aspen Engineering
5474 Longley Lane #200
Reno, NV 89511
Phone: (775) 826-6061
Fax: (775) 826-1228
e-mail: mail@aspenreno.com

Electrical Engineer
PK Electrical
681 Sierra Rose Dr. Suite B
Reno, NV 89511
Phone: (775) 826-9010
Fax: (775) 826-9030
e-mail:
kpurcell@pkelectrical.com

No.	Description	Date

CARSON CITY
COMMUNITY
CENTER ADA
IMPROVEMENTS

DETAILS

Project number	
Date	8-11-10
Drawn by	JPC
Checked by	JPC

A201

Scale 1/4" = 1'-0"

CEILING DIFFUSER - SUPPLY

CEILING DIFFUSER - RETURN

EXHAUST FAN

LIGHT FIXTURES -
SEE LIGHTING PLAN / FIXTURE SCHEDULE

SPEAKER / SMOKE DETECTOR

5/8" GYPSUM BOARD CEILING
SUSPENSION SYSTEM PER DETAIL 11/A202
& ICC-ESR-1222 SYSTEM

EXIT LIGHT

EMERGENCY LIGHT

100017

15 — 12 — CLG MAT LEGEND — 9

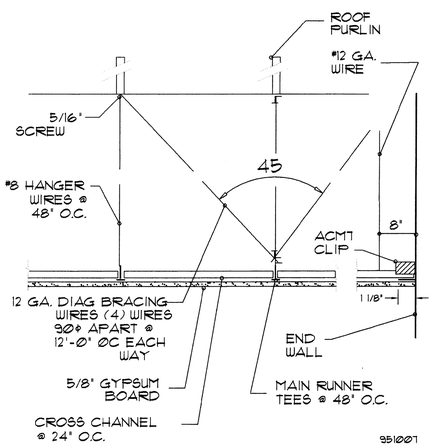

14 — SUSP. GYP. BD — NO SCALE — 11

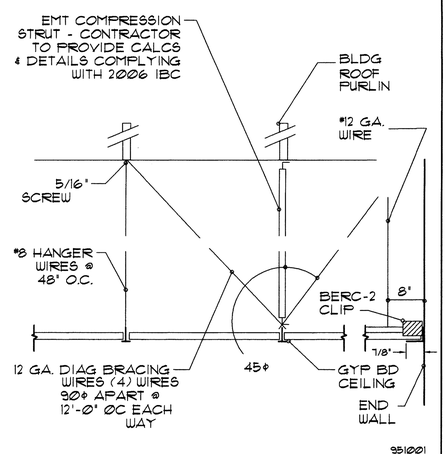

SEISMIC BRACE — NO SCALE — 8

COMPRESSION POST SCHEDULE		
MAX. LENGHT	MEMBER 'A'	MEMBER 'B'
6'-6"	1" O.D. EMT	1 1/4" O.D. EMT
8'-6"	1 1/4" O.D. EMT	1 1/2" O.D. EMT

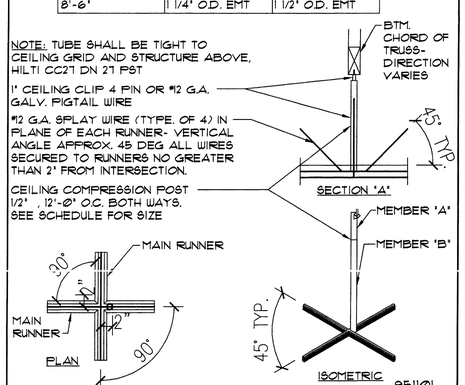

13 — 10 — COMPRESSION STRUT 1/4"=1'-0" — 7

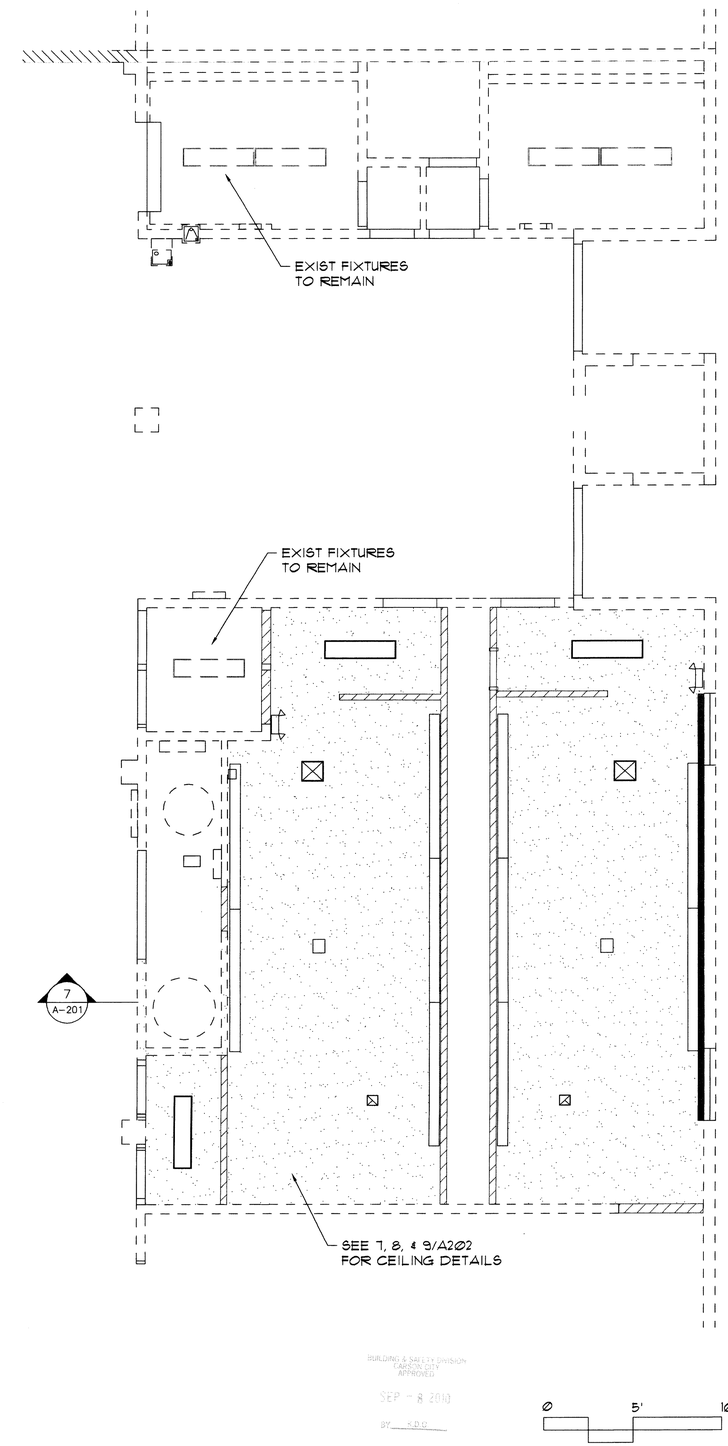

REFLECTED CEILING PLAN — 1/4"=1'-0" — 1

J.P. COPOULOS ARCHITECT

P.O. Box 2517
Carson City
Nevada
89702

T 775-885-7907
F 775-885-6806

www.jpcarchitect.com

JOHN P. COPOULOS REGISTERED ARCHITECT STATE OF NEVADA
8/25/10

Project Address:
851 East Williams St
Phone 775-887-2290
Fax 775-887-2256

Owner:
Carson City Parks & Rec Dept
3303 Butti Way Bldg #9
Carson City, Nv 89701
Phone 775-887-2262
Fax 775-887-2145
Rmoellendorf@carson.org

Mechanical Engineer
Aspen Engineering
5474 Longley Lane #200
Reno, NV 89511
Phone: (775) 826-6061
Fax: (775) 826-1228
e-mail: mail@aspenreno.com

Electrical Engineer
PK Electrical
681 Sierra Rose Dr. Suite B
Reno, NV 89511
Phone: (775) 826-9010
Fax: (775) 826-9030
e-mail:
kpurcell@pkelectrical.com

No.	Description	Date

CARSON CITY COMMUNITY CENTER ADA IMPROVEMENTS

REFLECTED CEILING PLAN

Project number	
Date	8-11-10
Drawn by	JPC
Checked by	JPC

A202

Scale 1/4" = 1'-0"

GENERAL , SUPPLEMENTARY and SPECIAL CONDITIONS

General Conditions: The "General Conditions ", standard form of Carson City, latest edition, is hereby made a part of these specifications. In case of conflict, the following paragraphs shall govern over the General Conditions.

Contract Documents: Include the drawings, specifications, general conditions, and agreement (building contract). They are complimentary, and what is called for by any one shall be as binding as if called for by all. Their intention is to include all labor and materials necessary for the proper execution of the work except as may be specifically noted otherwise on the drawings or for which separate prices may be asked in the bid proposal.

Regulations, Taxes and Permits: The whole of the work is to be executed in strict accordance with applicable regulations and codes. The contract sum, and any agreed variations thereof, shall include all taxes imposed by law except taxes and assessments on the real property comprising the site of this project.

Subcontractors: Division of these specifications into trade headings conforms roughly to customary practice. They are for convenience only. The Architect is not bound to define the limits of any subcontract. Note : The acceptance of a bid is contingent upon submission of a list of acceptable subcontractors whom the General Contractor proposes to use.

Number of Specified Items Required: Wherever in these specifications an article, device or piece of equipment is referred to in singular number, such reference shall apply to as many such articles as are shown in the drawings or required to complete the installation.

Claims for Extra Costs: If the Contractor claims that any instructions from the Architect involves extra cost under this contract, he shall give the Architect written notice thereof within a reasonable time after the receipt of such instructions, and in any event before proceeding to execute the work, except in emergency endangering life or property, and the procedure shall then be as provided for changes in the work. No such claim shall be valid unless so made.

Temporary Heat: Provide as necessary to protect the work, by methods approved by the Architect. Permanent heating plant may be used for this purpose when ready.

Contractor's Supervision: There shall be continuing superintendence throughout the job which can either be performed by the General Contractor himself or by someone in his employ.

Guarantee: The Contractor shall be responsible for and shall replace or remedy any faulty, improper of inferior materials or workmanship or any damage to other work resulting there from, without cost to the Owner, which shall appear within one year after the completion and acceptance of the work under this contract.

METAL FRAMING••

□ Metal studs: roll□formed galvanized steel. 22 gauge, "C" shaped and of size shown on the drawings. Conform to ASTM C645 - 81.
□ Runners: roll - formed 22 gauge.
□ Finish: Factory applied rust inhibitive primer or galvanized finish.
□ Fasteners: Cadmium plated screws or bolts as recommended by the m'fgr.
□ Powder driven fasteners: 1/4" or 3/8" diameter. Use washer with inserts. Powder driven fasteners will not be permitted at rough openings or edge of concrete.
□ Expansion bolts: Wej□it or equal for use at rough openings and edges of concrete. Use washers under all bolt heads.
□ Secure tracks to structure at 48" o.c. maximum and 6" from ends typical. Attach studs securely to track and provide seismic bracing in compliance with code requirements and m'fgrs recommendations.
□ Frame openings and secure to structure as per m'fgrs recommendations.

CASEWORK••

□ Comply with all applicable provisions of the Architectural Woodworking Institute (AWI).
□ Submit shop drawings, plastic laminate, and hardware for approval.
□ Materials:
Plastic laminate: Formica, Wilson Art or equal.
Cabinet liner: NEMA Cabinet□liner Type, nominal .020" thick.
Backing sheets: M'fgrs standard, nominal .020" thick.
Hardboard: American Hardboard Assoc. I.S. □ 71, tempered.

□ Fabrication grade to be similar to AWI Section 400, custom grade. All exterior exposed surfaces to be plastic laminate. Assemble all parts with m'fgrs standard fasteners and adhesive.

DOORS & FRAMES••

□ Furnish and install hollow metal frames as shown on the drawings equal to Timely prefinished "C" series frames. Color to be selected by owner. Provide accessories as required for hardware specified.
□ Doors to be flush interior doors for stained finish, Natural birch, rotary cut, solid core particle board core, meeting the grade of AWI: Custom.

FINISH HARDWARE ••

-Finishes: Satin chrome, 626.
- Hardware Schedule: Hardware supplier shall submit two copies of proposed finish hardware schedule for owner's approval prior to delivery of any finish hardware to site:
□ All hinged doors will have Glynn□Johnson 65 silencers or equal, two per door at the 1/4 points.
□ Butts: Stanley or equivalent, 1 1/2 pair on interior and exterior doors.
□ Locksets: Best , 9K commercial series with 15D trim, storeroom function. All doors to be keyed alike.
- Door Stops: Wall mounted Trimco 1270WX.
- Closer: LCN 1460 series parallel arm
- Push/Pull plate: Trimco 1001-3 & 1010-3
□ Hardware sets: See 10/A200 on plans.

FLOORING••

Ceramic tile:

□ Equal to Dal Tile "Stratford Place" 6" X 6". Color as selected by the owner. Installation shall conform to the Tile Council of America, Inc. "Handbook for Ceramic Tile Installation", latest edition.

Floors: Method F113□10

- Grout: Equal to Laticrete Spectralock colored grout. Color as selected by the owner.

DRYWALL ••

General:

□ Subcontractor must be a specialist in this type of work employing experienced personnel, and be approved by the Architect. Subcontractor must be able to show similar installations in good condition after approximately three years service.
□ Provide adequate heat and ventilation for proper drying.

Materials and installation:

□ 5/8" thick gypsum wallboard, recess edge type, taped and spackled. USG "Sheetrock W/P Wallboard" or equal in toilets.
□ Where fireated wallboard is required on the drawings, USG 5/8" Firecode "C" gypsum wallboard or equal.
□ Bent or rusty materials not acceptable.
□ Nailing in strict accordance with manufacturer's recommendations, using annular ring flathead nails or drywall screws.
□ All electrical boxes and all other rough□in openings must be cleaned of excess spackle before painter starts.
□ Use metal corner bead on all outside corners.
□ Spackled areas shall be sanded to smooth even surfaces. Verify with owner areas to receive wall fabric and provide smooth finish. All other areas to receive knockdown finish. Provide samples for owner's approval.
□ Paint will have no texture additives to hide defects.

□ Backblock all unsupported wallboard joints where wallboard is applied to ceiling joists and rafters with extra layer of board set in cement.

GYPSUM BOARD CEILING SYSTEM ••••••••••••••••••••••••••••••••

□ Suspension system to be equal to USG Dom drywall suspended ceiling system 15/16"meeting ICC-ES evaluation report ESR-1222. See drawings for locations. See drawings for seismic bracing detail.

□ Suspension system to be equal to USG Dom drywall suspended ceiling system 15/16"meeting ICC-ES evaluation report ESR-1222. See drawings for locations. See drawings for seismic bracing detail.

PAINTING AND FINISHING ••••••••••••••••••••••••••••••••••••••

General:

□ Use tarpaulins or drop cloths when working above finished work. Clean paint splatters, etc. from finished surfaces. Take extraordinary care to prevent fire.
□ Deliver materials in unbroken containers.
□ Application of first coat constitutes acceptance of surfaces by Painting Subcontractor.
□ Colors: Owner will submit color schedule to Painting Subcontractor who, if requested, will prepare samples of each color on same base as materials are to be applied. Allow ample time for selection of colors. Do no work until colors are approved by the owner.
□ Brand names: where brand names are specifically called out, they cannot be substituted for without permission of the Architect. Where not otherwise called out, materials shall be of general quality and price range as Dutch Boy or Pratt and Lambert products.
□ Fill all nail holes. Color to match finish in stained surfaces. Finish flush with adjacent surfaces.

Schedule:

□ Surfaces to receive no finish: unless specifically noted otherwise, apply no finish to the following: Aluminum, brass, bronze, stainless steel, copper, brick, concrete, ceramic tile, glass, resilient flooring.
□ Exposed metal surfaces: two coats oil based enamel, first coat gloss and second coat semi□gloss. Apply appropriate primer where items are not shop primed. Include painting of new flues, exhaust vents, mechanical equipment, and other new mechanical penetrations.
□ Interior wood: Interior doors and wood trim to be stained: One coat pigmented Olympic Stain or equal followed by three coats sprayed lacquer, sanded between coats with all coats gloss except the final coat semigloss or one coat white shellac, one coat gloss varnish, final coat dull varnish sanded between coats. Varnish shall be Pratt and Lambert #38 Pale Trim or equal.
□ Gypsum wallboard: No texture additives in paint. One coat of primer sealer. Two coats of flat latex paint except in toilets use two coats of satin enamel with stipple finish.

MISCELLANEOUS ACCESSORIES••••••••••••••••••••••••••••••••••••

Toilet Accessories:

□ Furnished and installed by the contractor. See plans for schedule. All numbers are by Bobrick or equal.

1. 48" Grab Bar	B-6806
2. 36" Grab Bar	B-6806
3. 18" Vertical Grab Bar	B-6806
4. Toilet Paper Dispenser	By Owner
5. Sanitary Napkin Disposal	By Owner
6. Mirror	B-290- 32" X 42" high
7. Paper Towel Dispenser	By owner
8. Electric hand dryer	Xlerator model XL-C w/ recess kit #40502 by Excel Dryer, Inc.
9. Soap Dispenser	By Owner
10. Handicap Sign	See plan

-Toilet Partitions:

Equal to Global Partitions, floor anchored overhead braced, powder coated finish.

- Doors and panels shall be 1" thick, constructed of two sheets of 22-gauge, galvanized, stretcher-leveled quality steel formed and bonded under pressure with a non-toxic adhesive to a resin-impregnated, sound-deadening honeycomb core.
- Pilasters shall be 1-1/4", constructed of two sheets of 22-gauge, galvanized steel, formed and bonded under pressure with a non-toxic adhesive to a full resin-impregnated, sound-deadening full-face honeycomb core.
- Hardware: Chromium plated die cast zamac hinge shall have gravity acting cam and wrap around flanges. Upper and lower door hinges are recessed. Door hardware shall include a coat hook, bumper, stop, keeper, a concealed latch with emergency access and chromium plated vandal resistant fasteners.
- Panel and pilaster brackets shall be as noted: Stirrup brackets shall be 2 1/8" long chromium plated die cast zamac. Stirrup brackets shall be 1/8" thick and mounted with chrome plated steel vandal resistant fasteners. The attachment of brackets to the adjacent wall construction shall be accomplished with 2 ½" chrome plated steel vandal resistant screws and plastic anchors.
- Pilaster shoes shall be stainless steel 3" high with a #4 satin finish.
- Head rail shall be made of heavy-duty anodized extruded aluminum (6063-T5 alloy). Head rail is anit-grip and attaches to the top of the pilaster with stainless steel vandal resistant screws.
- Head rail brackets shall be made from a die cast aluminum alloy and shall be attached to the adjacent wall construction with 2 ½" stainless steel vandal resistant screws and plastic anchors.

□ Provide solid backing for all accessories for secure installation.

••••••••••••••••••••••••END OF SPECIFICATIONS••••••••••••••••••••••••

J.P. COPOULOS ARCHITECT (C)

P.O. Box 2517
Carson City
Nevada
89702

T 775-885-7907
F 775-885-6806

www.jpcarchitect.com

8/25/10

Project Address:
851 East Williams St
Phone 775-887-2290
Fax 775-887-2256

Owner:
Carson City Parks & Rec Dept
3303 Butti Way Bldg #9
Carson City, Nv 89701
Phone 775-887-2262
Fax 775-887-2145
Rmoellendorf@carson.org

Mechanical Engineer
Aspen Engineering
5474 Longley Lane #200
Reno, NV 89511
Phone: (775) 826-6061
Fax: (775) 826-1228
e-mail: mail@aspenreno.com

Electrical Engineer
PK Electrical
681 Sierra Rose Dr. Suite B
Reno, NV 89511
Phone: (775) 826-9010
Fax: (775) 826-9030
e-mail:
kpurcell@pkelectrical.com

No.	Description	Date

CARSON CITY COMMUNITY CENTER ADA IMPROVEMENTS

ARCHITECTURAL SPECIFICATION

Project number	
Date	8-11-10
Drawn by	JPC
Checked by	JPC

A300

Scale 1/4" = 1'-0"