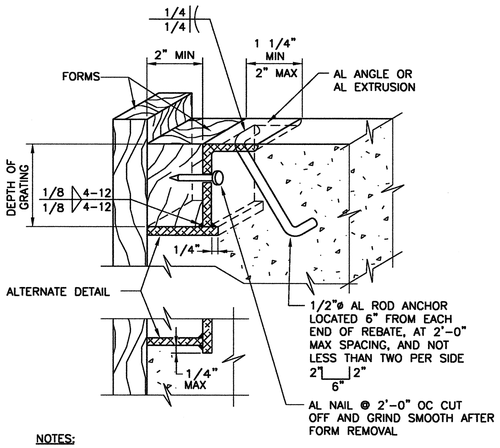

NOTES:

1. FOR GRATING SEE SPECIFICATIONS.
2. REBATE ANGLE TO BE CONTINUOUS AROUND ENTIRE OPENING.
3. AL ANGLE AND BEARING PLATE SHALL BE 1/4" MIN THICK.
4. REBATE MAY BE EXTRUDED, SUBJECT TO ENGINEER'S ACCEPTANCE.
5. COAT ALL ALUMINUM IN CONTACT WITH CONCRETE PER SPECIFICATIONS.
6. UNLESS OTHERWISE INDICATED ON THE DRAWINGS, ANGLE SHALL BE ALUMINUM FOR ALUMINUM GRATING AND TYPE 304 OR 316 SST FOR FRP GRATING.

A400 TYP S — GRATING REBATE — 06-30-99

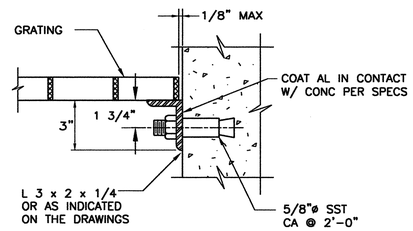

NOTE:

1. UNLESS OTHERWISE INDICATED ON THE DRAWINGS, ANGLE SHALL BE ALUMINUM FOR ALUMINUM GRATING AND TYPE 304 OR 316 SST FOR FRP GRATING.

A402 TYP S — GRATING SEAT — 11-01-96

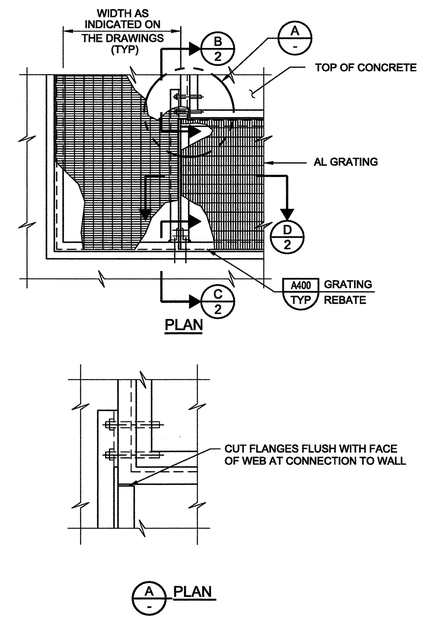

NOTE:

1. COAT ALUMINUM SURFACES IN CONTACT WITH CONCRETE PER SPECS.

A408 TYP N — SUPPORTS FOR ALUMINUM GRATING — SHEET 1 OF 2 — 03-16-09

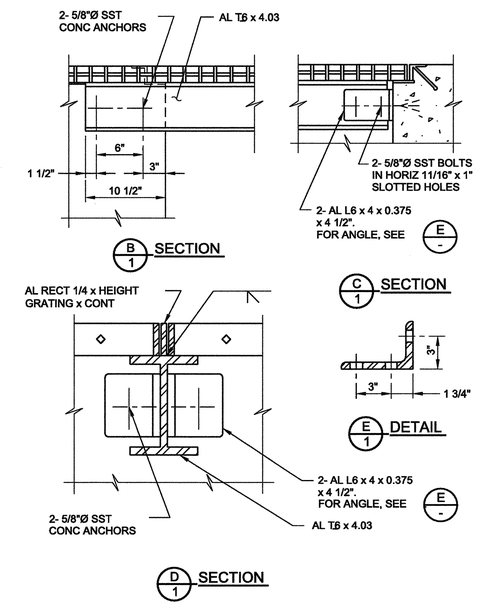

A408 TYP N — SUPPORTS FOR ALUMINUM GRATING — SHEET 2 OF 2 — 03-16-09

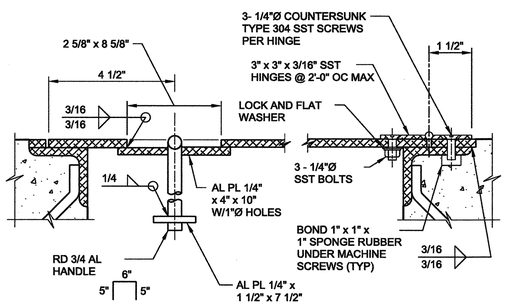

HINGE & HANDLE DETAIL

THICKNESS OF TREAD PLATE "T" (INCH)				
LIVE LOAD (PSF)	SHORTER SPAN "L" (FT-IN)			
	12"	1'-6"	2'-0"	2'-6" TO 4'-0"
100	3/16	1/4	3/8	1/2
150	1/4	3/8	1/2	1/2
200	1/4	3/8	1/2	3/8*
250	1/4	3/8	1/2	3/8*
300	1/4	3/8	1/2	3/8*
350	3/8	1/2	3/8*	3/8*
400	3/8	1/2	3/8*	3/8*

NOTE:

1. * 3/8" PLATE W/ AL T 3.00 x 3.00 x 2.72 STIFFENERS. SEE SECTION A - 3 AND B - 3

SCHEDULE FOR TREAD PLATE

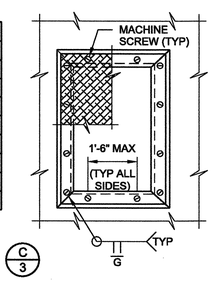

SEAT PLAN

A500 TYP NS — ALUMINUM TREAD PLATE — SHEET 1 OF 3 — 12-14-05

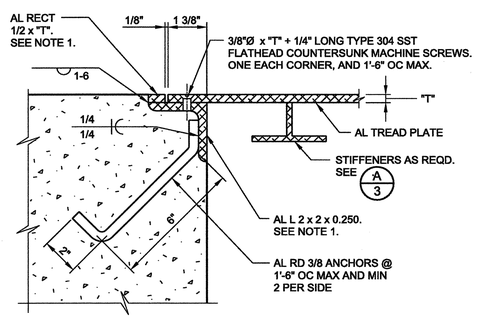

SECTION - REBATE

NOTES:

1. ALUMINUM ANGLE AND BAR MAY BE EXTRUDED.
2. COAT ALUMINUM SURFACE IN CONTACT WITH CONCRETE IN ACCORDANCE WITH THE SPECIFICATIONS.
3. OMIT PERIMETER MACHINE SCREWS WHERE HINGE IS INDICATED ON THE DRAWINGS.
4. HINGE AND HANDLE DETAIL SHALL APPLY WHERE INDICATED ON THE DRAWINGS.
5. TREAD PLATE LIVE LOAD SHALL BE SAME AS FLOOR LIVE LOAD.
6. TREAD PLATE SHALL BE FABRICATED IN UNITS THAT DO NOT WEIGH MORE THAN 75 POUNDS.

A500 TYP NS — ALUMINUM TREAD PLATE — SHEET 2 OF 3 — 12-14-05

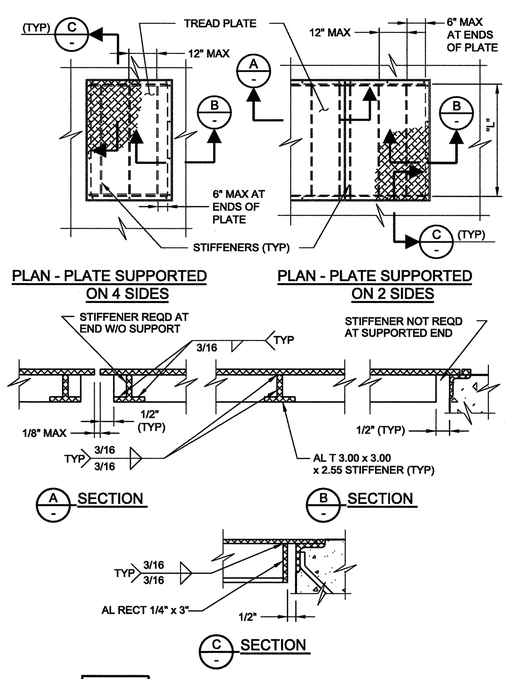

A500 TYP NS — ALUMINUM TREAD PLATE — SHEET 3 OF 3 — 12-14-05

VERIFY SCALES
BAR IS ONE INCH ON ORIGINAL DRAWING
0 1"
IF NOT ONE INCH ON THIS SHEET, ADJUST SCALES ACCORDINGLY

DESIGNED	JBR
DRAWN	ARE
CHECKED	GAG
DATE	OCTOBER 2010

carollo

STATE OF NEVADA — JOEL D. SMASON — CIVIL — No. 13012 — PROFESSIONAL ENGINEER — 10-13-10

REV.	DATE	DESCRIPTION	BY	APPD

CARSON CITY PUBLIC WORKS
NORTH LIFT PUMP STATION IMPROVEMENTS
CARSON CITY CIP NO. 5.0609

TYPICAL
TYPICAL DETAILS I

DRAWING NO. T-1

SHEET NO. 46 OF 55

Last Saved By: $(GETPROP)??
c:\pw_working\projectwise\adorbin\dms82540\G-BDR 9-12-10 04:30pm ADorbin XREFS: $(XREFS)??

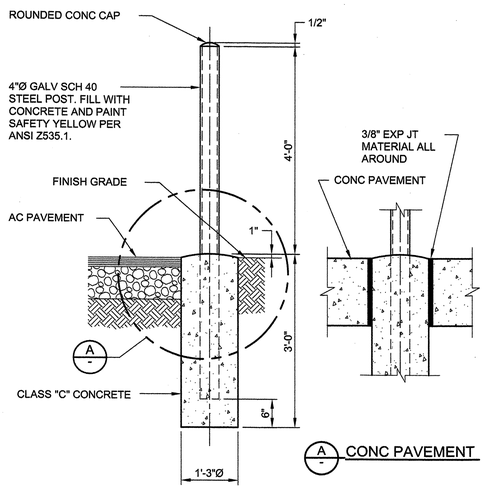

AC PAVEMENT AND FINISH GRADE

A CONC PAVEMENT

C160 TYP N GUARD POST 08-01-05

VERIFY SCALES
BAR IS ONE INCH ON ORIGINAL DRAWING
0 1"
IF NOT ONE INCH ON THIS SHEET, ADJUST SCALES ACCORDINGLY

DESIGNED	JBR
DRAWN	ARE
CHECKED	GAG
DATE	OCTOBER 2010

carollo

JOHN B. RICHARDSON Exp. 12/31/11 10/8/10

REV.	DATE	DESCRIPTION	BY	APP'D

CARSON CITY PUBLIC WORKS
NORTH LIFT PUMP STATION IMPROVEMENTS
CARSON CITY CIP NO. 5.0609

TYPICAL
TYPICAL DETAILS II

DRAWING NO.
T-2

SHEET NO.
44 OF 55

Last Saved By: AEvans 10-12-10 11:37am

C:\pw_working\projectwise\aevans\dms82532\T-02 10-12-10 01:04pm AEvans XREFS: G-BDR

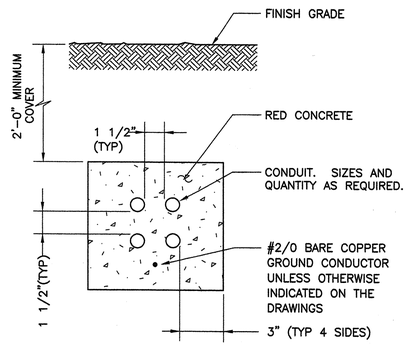

NOTES:

1. DIMENSIONS ARE MINIMUM UNLESS OTHERWISE INDICATED ON THE DRAWINGS.
2. THIS ENCASEMENT FOR NON-TRAFFIC AREAS ONLY, OR WHERE SPECIFICALLY INDICATED ON THE DRAWINGS.

E102 TYP — UNREINFORCED ENCASEMENT FOR ELECTRICAL CONDUITS

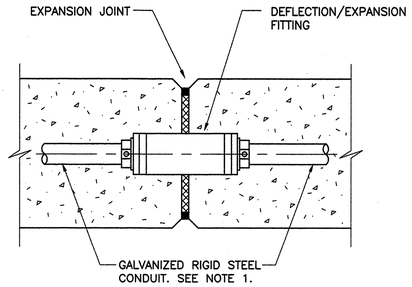

NOTE:

1. FOR EMBEDDED PVC CONDUIT RUNS, PROVIDE ADDITIONAL FITTINGS REQUIRED TO MAKE TRANSITION FROM PVC TO GALVANIZED RIGID STEEL CONDUIT AT DEFLECTION/EXPANSION FITTING.

E144 TYP — CONDUIT DEFLECTION/EXPANSION FITTING FOR EMBEDDED CONDUIT

11-01-96

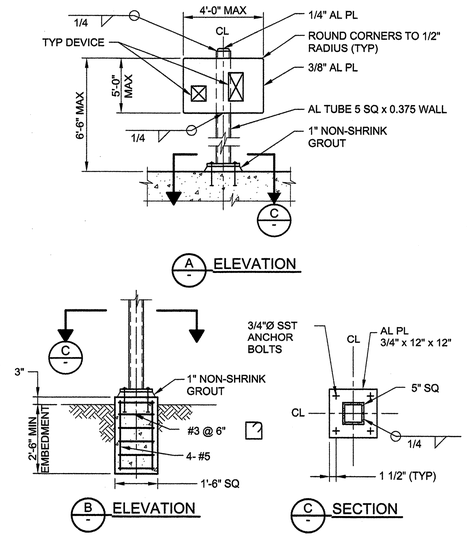

NOTES:

1. WHERE SEPARATE FOUNDATION IS REQD, SEE B.
2. COAT ALUMINUM SURFACES IN CONTACT W/ CONCRETE PER SPECS.
3. USE SST FASTENERS FOR MOUNTING DEVICES.
4. WEIGHT OF DEVICE(S) SHALL NOT EXCEED 300 POUNDS.

E332 TYP — DEVICE SUPPORT AND MOUNTING

08-01-05

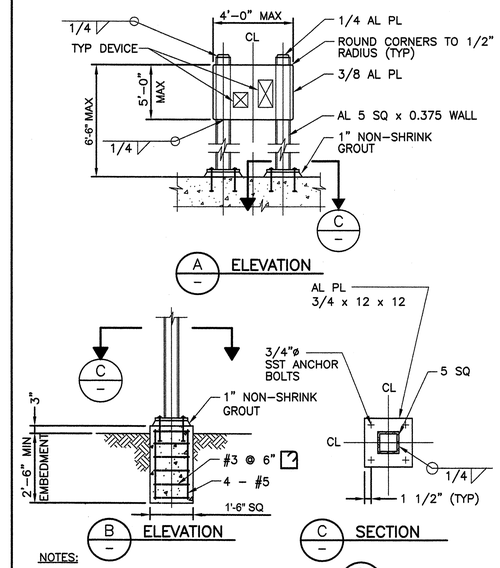

NOTES:

1. WHERE SEPARATE FOUNDATION IS REQD, SEE B.
2. COAT ALUMINUM SURFACES IN CONTACT W/ CONCRETE PER SPECS.
3. USE SST FASTENERS FOR MOUNTING DEVICES.
4. WEIGHT OF DEVICE(S) SHALL NOT EXCEED 300 POUNDS.

E333 TYP — DEVICE SUPPORT AND MOUNTING

NTS

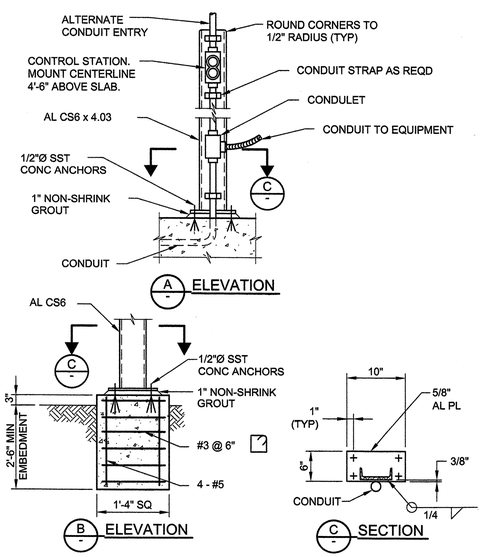

NOTES:

1. WHERE SEPARATE FOUNDATION IS REQD, SEE B.
2. COAT ALUMINUM SURFACES IN CONTACT W/ CONCRETE PER SPECS.
3. USE SST FASTENERS FOR MOUNTING DEVICES.

E336 TYP — CONTROL STATION

08-01-05

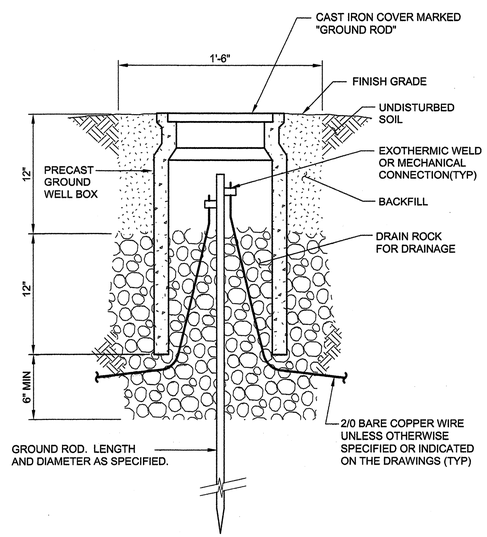

E410 TYP — GROUND ROD INSTALLATION

08-01-05

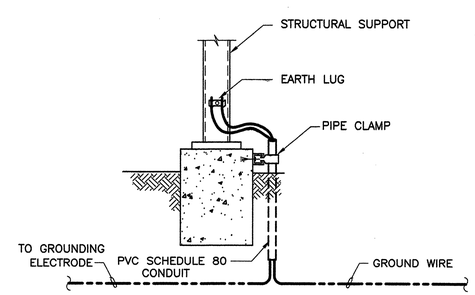

E422 TYP — STRUCTURAL SUPPORT GROUNDING

VERIFY SCALES

BAR IS ONE INCH ON ORIGINAL DRAWING

0 1"

IF NOT ONE INCH ON THIS SHEET, ADJUST SCALES ACCORDINGLY

DESIGNED	JBR
DRAWN	ARE
CHECKED	GAG
DATE	OCTOBER 2010

carollo

STATE OF NEVADA — JOHN M. JACOBS — ELECTRICAL — PROFESSIONAL ENGINEER — No. 12211 — 10/8/10

REV.	DATE	DESCRIPTION	BY	APP'D

CARSON CITY PUBLIC WORKS
NORTH LIFT PUMP STATION IMPROVEMENTS
CARSON CITY CIP NO. 5.0609

TYPICAL

TYPICAL DETAILS III

DRAWING NO. T-3

SHEET NO. 45 OF 55

Last Saved By: AEvans 10-11-10 04:39pm

C:\pw_working\projectwise\aevans\dms82532\T-03 10-12-10 11:36am AEvans XREFS: G-BDR

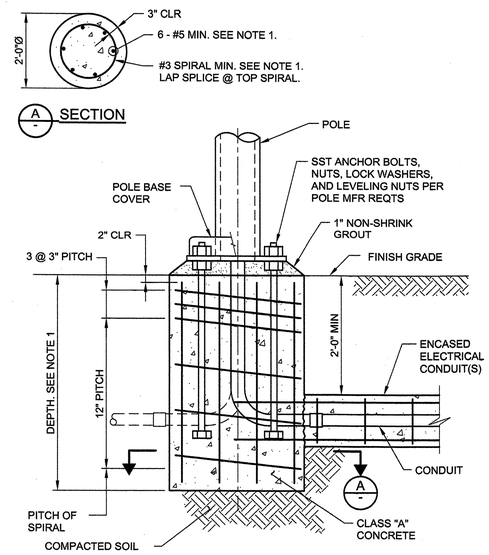

NOTE:

1. IF NOT SPECIFIED OR INDICATED ON THE DRAWINGS, DEPTH AND REINFORCEMENT SHALL BE DETERMINED BY POLE MANUFACTURER.

E510 TYP — AREA LIGHTING POLE MOUNTING

08-01-05

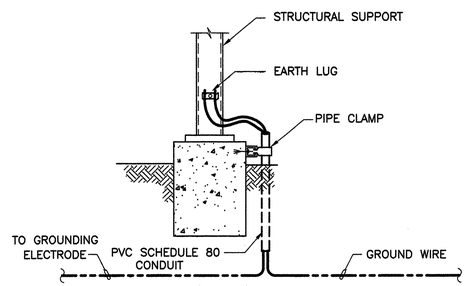

EM050 TYP — STRUCTURAL SUPPORT GROUNDING

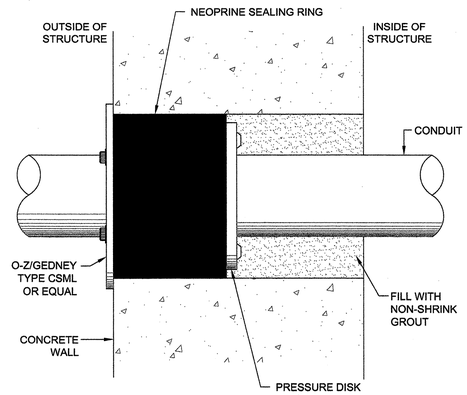

NOTES:

1. USE O-Z/GEDNEY FITTING CSMC OR EQUAL OF THE STRUCTURE HAS AN EXTERIOR MEMBRANE.

EM134 TYP S — CORE HOLE CONDUIT WALL PENETRATION

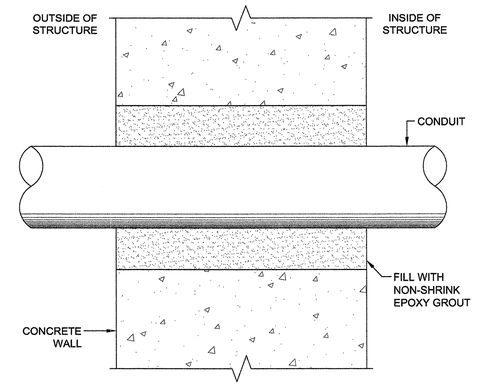

NOTES:

1. ROUGHEN SURFACE OF OPENING AND APPLY EPOXY CEMENT BONDING AGENT IMMEDIATELY PRIOR TO GROUTING.

EM138 TYP S — CORE HOLE CONDUIT WALL PENETRATION

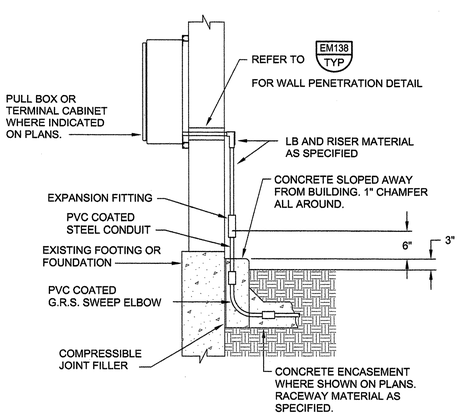

EM219 TYP S — CONDUIT PENETRATION ABOVE GRADE

VERIFY SCALES
BAR IS ONE INCH ON ORIGINAL DRAWING
0 1"
IF NOT ONE INCH ON THIS SHEET, ADJUST SCALES ACCORDINGLY

DESIGNED	JBR
DRAWN	ARE
CHECKED	GAG
DATE	OCTOBER 2010

carollo

STATE OF NEVADA — JOHN M. JACOBS — ELECTRICAL — PROFESSIONAL ENGINEER — No. 12201 — 10/13/10

REV.	DATE	DESCRIPTION	BY	APP'D

CARSON CITY PUBLIC WORKS
NORTH LIFT PUMP STATION IMPROVEMENTS
CARSON CITY CIP NO. 5.0609

TYPICAL
TYPICAL DETAILS IV

DRAWING NO.
T-4

SHEET NO.
46 OF 55

Last Saved By: AEvans 10-11-10 04:40pm
C:\pw_working\projectwise\aevans\dms82532\T-04 10-12-10 11:38am AEvans XREFS: G-BDR

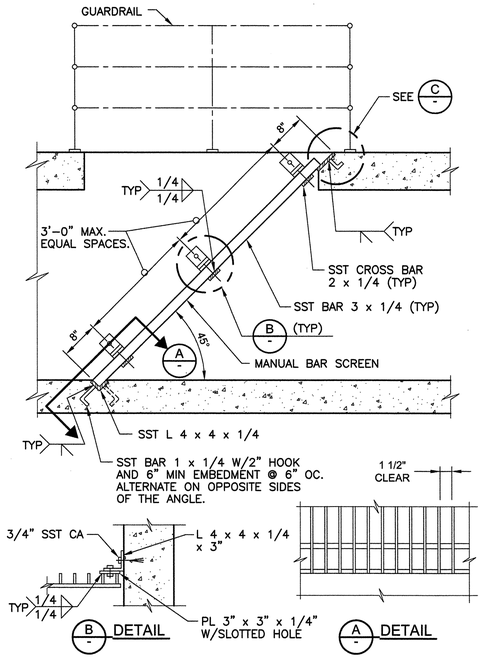

M232 TYP Y — ANCHORED MANUAL BAR SCREEN
SHEET 1 OF 2

6562A10 10-12-10

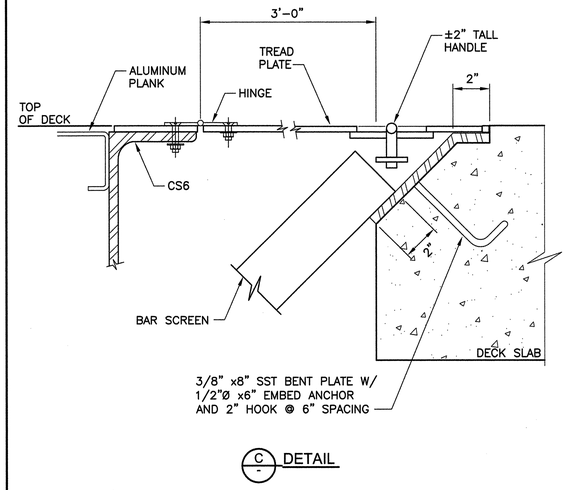

M232 TYP Y — ANCHORED MANUAL BAR SCREEN
SHEET 2 OF 2

6562A10 10-12-10

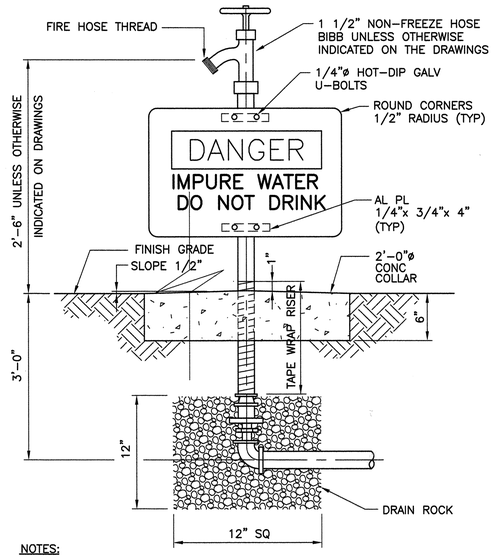

NOTES:

1. SIGN SHALL BE 3/8" THICK PLASTIC RESISTANT TO SUNLIGHT (ULTRAVIOLET) DETERIORATION.
2. SIGN SHALL BE 7" x 10" & SHALL CONFORM TO THE SPECIFICATIONS.
3. SIGN AS SHOWN IS ROTATED 90° OFF TRUE POSITION. SIGN SHALL BE MOUNTED TO PERMIT EASY READING.
4. INSTALL HOSE RACK, TYPICAL DETAIL M280, AT EACH HOSE VALVE.

M274 TYP R — FREEZELESS YARD HYDRANT
8/11/00

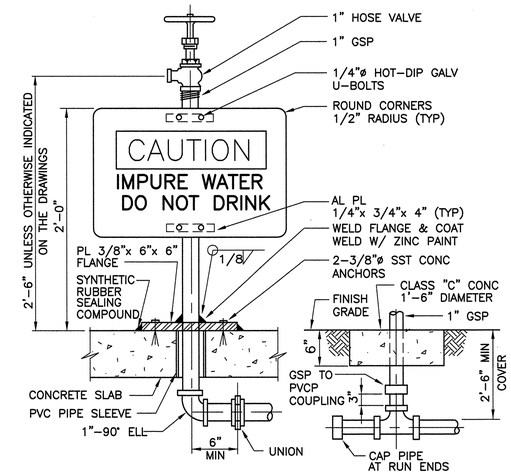

STRUCTURE INSTALLATION — YARD INSTALLATION

NOTES:

1. SIGN SHALL BE 3/8" THICK PLASTIC RESISTANT TO SUNLIGHT (ULTRAVIOLET) DETERIORATION.
2. SIGN SHALL BE 7" x 10" & SHALL CONFORM TO THE SPECIFICATIONS.
3. SIGN AS SHOWN IS ROTATED 90° OFF TRUE POSITION. SIGN SHALL BE MOUNTED TO PERMIT EASY READING.
4. INSTALL HOSE RACK, TYPICAL DETAIL M280, AT EACH HOSE VALVE.

M276 TYP NS — 1" HOSE VALVE AND SIGN
06-01-98

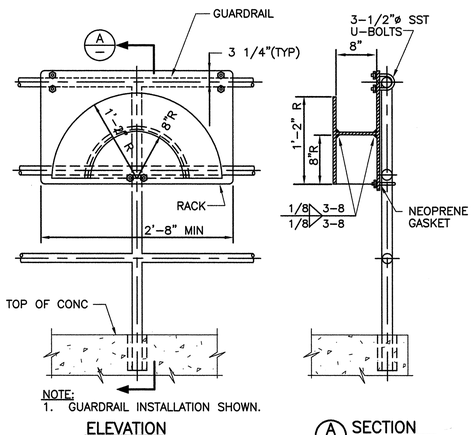

NOTE:
1. GUARDRAIL INSTALLATION SHOWN.

ELEVATION — A SECTION

NOTES:

1. HOSE RACK SHALL BE FABRICATED FROM 3/16" ALUMINUM PLATE. ROUND ALL EDGES SMOOTH.
2. HOSE RACKS INSTALLED IN YARD LOCATIONS SHALL BE MOUNTED ON POST. THE POST SHALL BE TS 3 x 3 x 0.1875 x 4'-0" HOT-DIP GALVANIZED AND SHALL BE SET IN CONCRETE 18"ø x 18" DEEP. WELD CAP ON TOP OF POST.
3. HOSE RACKS INSTALLED IN STRUCTURES SHALL BE WALL MOUNTED. FASTEN RACK TO WALL WITH 2-5/8"ø SST CONCRETE ANCHORS. FOR MASONRY WALLS, FASTEN TO GROUTED CELLS.

M280 TYP — HOSE RACK

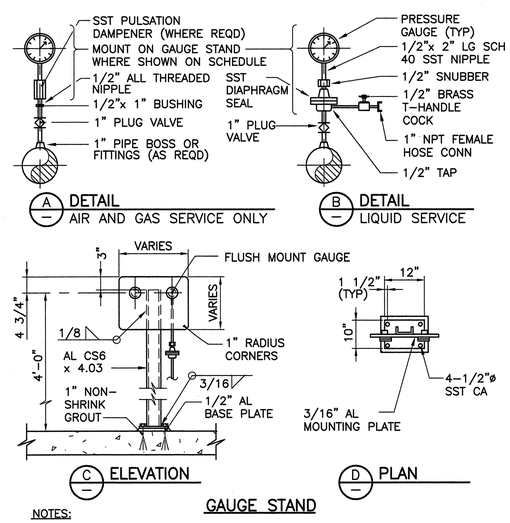

GAUGE STAND

NOTES:

1. ALL GAUGES SHALL BE DUAL SCALE. SCALES ON THE GAUGE FACE SHALL BE MARKED IN PSIG AND FEET OF WATER (FOR POSITIVE READINGS) OR INCHES OF MERCURY (FOR VACUUM READINGS).
2. MOUNTING PLATE DIMENSIONS VARY ACCORDING TO SIZE AND NUMBER OF GAUGES REQUIRED.
3. AT GAUGE STAND, DIAPHRAGM SHALL BE LOCATED BELOW THE MOUNTING PLATE. ONE INCH PIPE SHALL BE ROUTED BETWEEN DIAPHRAGM AND SERVICE PIPE PLUG VALVE. CROSSES WITH THREADED PLUGS SHALL BE USED IN LIEU OF 90° ELBOWS, WITH AT LEAST ONE UNION PER CROSS.
4. COAT ALUMINUM IN CONTACT WITH CONCRETE PER SPECIFICATIONS.

M294 TYP — PRESSURE GAUGE DETAILS

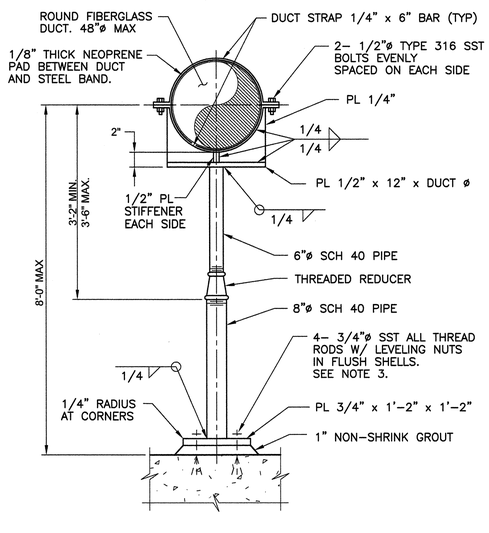

NOTES:

1. DUCT SUPPORT SHALL BE HOT-DIP GALVANIZED AFTER FABRICATION.
2. MAXIMUM VERTICAL LOAD = 1000 POUNDS.
3. CHEMICAL ANCHORS MAY BE SUBSTITUTED FOR FLUSH SHELLS AND ALL THREAD RODS.

M901 TYP — ADJUSTABLE DUCT SUPPORT
08-01-05

VERIFY SCALES
BAR IS ONE INCH ON ORIGINAL DRAWING
0 1"
IF NOT ONE INCH ON THIS SHEET ADJUST SCALES ACCORDINGLY

DESIGNED	JBR
DRAWN	ARE
CHECKED	GAG
DATE	OCTOBER 2010

carollo

STATE OF NEVADA — PROFESSIONAL ENGINEER — JOHN B. RICHARDSON — Exp. 12/31/11 — No. 9704

REV.	DATE	DESCRIPTION	BY	APP'D

CARSON CITY PUBLIC WORKS
NORTH LIFT PUMP STATION IMPROVEMENTS
CARSON CITY CIP NO. 5.0609

TYPICAL
TYPICAL DETAILS V

DRAWING NO. T-5

SHEET NO. 47 OF 55

Last Saved By: AEvans 10-12-10 02:58pm

C:\pw_working\projectwise\aevans\dms82532\T-05 10-12-10 03:23pm AEvans XREFS: G-BDR

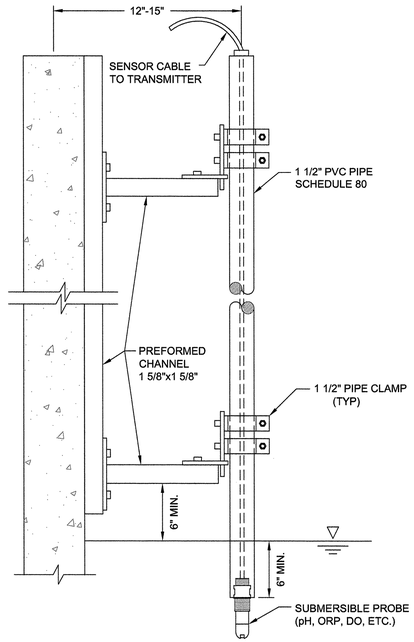

NA012 TYP S ANALYZER PROBE MOUNTING DETAIL

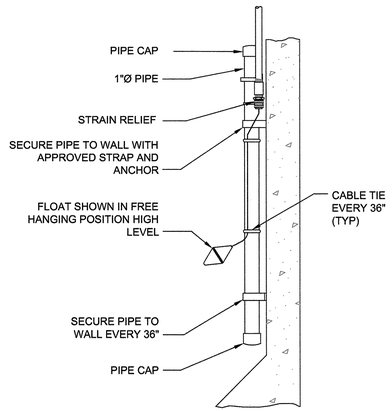

NL101 TYP S FLOAT SWITCH INSTALLATION

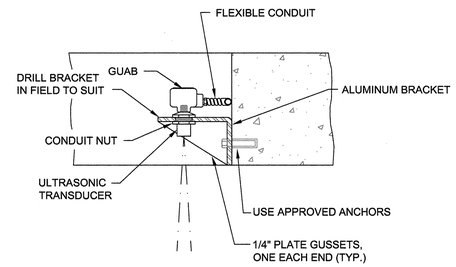

NL185 TYP S ULTRASONIC LEVEL TRANSDUCER MOUNTING DETAIL

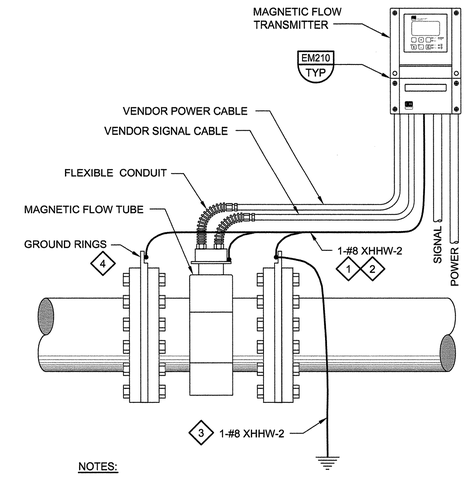

NOTES:

1. VERIFY ZERO POTENTIAL BETWEEN FLOW TUBE, EARTH GROUND AND TRANSMITTER GROUND TERMINAL.
2. CONNECT TRANSMITTER GROUND TERMINAL TO GROUND RINGS.
3. CONNECT METER BODY TO EARTH GROUND POTENTIAL.
4. EQUALIZE POTENTIAL VIA GROUND RINGS BETWEEN FLUID AND MAGMETER.

NF135 TYP S REMOTE TRANSMITTER MAGNETIC FLOW METER GROUNDING DETAIL

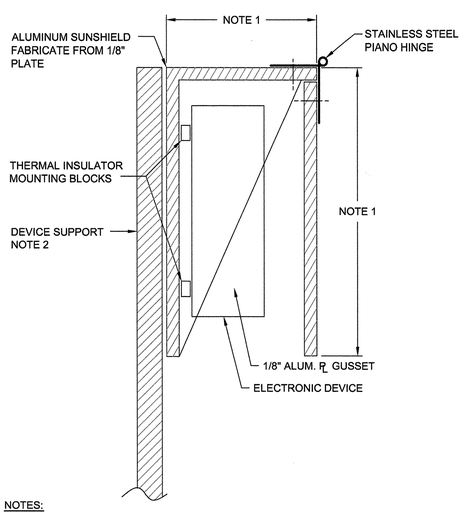

NOTES:

1. SUNSHIELD DIMENSIONS SHALL EXCEED THOSE OF THE ELECTRONIC DEVICE BY 2" ON ALL SIDES.
2. WHEN WALL MOUNTED, USE 4 STAINLESS STEEL ANCHOR BOLTS. WHEN MOUNTED ON HANDRAIL, USE STAINLESS STEEL U-BOLTS, NUTS & WASHERS.

NM107 TYP S SUNSHIELD MOUNTING DETAIL

VERIFY SCALES
BAR IS ONE INCH ON ORIGINAL DRAWING
0 1"
IF NOT ONE INCH ON THIS SHEET, ADJUST SCALES ACCORDINGLY

DESIGNED	JBR
DRAWN	ARE
CHECKED	GAG
DATE	OCTOBER 2010

carollo

STATE OF NEVADA PROFESSIONAL ENGINEER JOHN M. JACOBS ELECTRICAL No. 12212 10/18/10 6/30/11

REV.	DATE	DESCRIPTION	BY	APP'D

CARSON CITY PUBLIC WORKS
NORTH LIFT PUMP STATION IMPROVEMENTS
CARSON CITY CIP NO. 5.0609

TYPICAL
TYPICAL DETAILS VI

DRAWING NO.
T-6

SHEET NO.
48 OF 55

Last Saved By: AEvans 10-11-10 04:41pm

C:\pw_working\projectwise\aevans\dms82532\T-06 10-12-10 11:35am AEvans XREFS: G-BDR

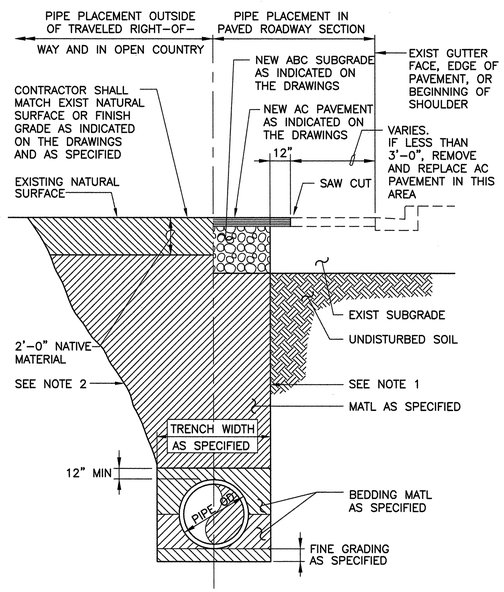

NOTES:

1. SEE SPECIFICATIONS FOR SHORING REQUIREMENTS.
2. SEE SPECIFICATIONS FOR SLOPING REQUIREMENTS.

P002 TYP — PIPE INSTALLATION AND PAVEMENT REPLACEMENT

01-22-99

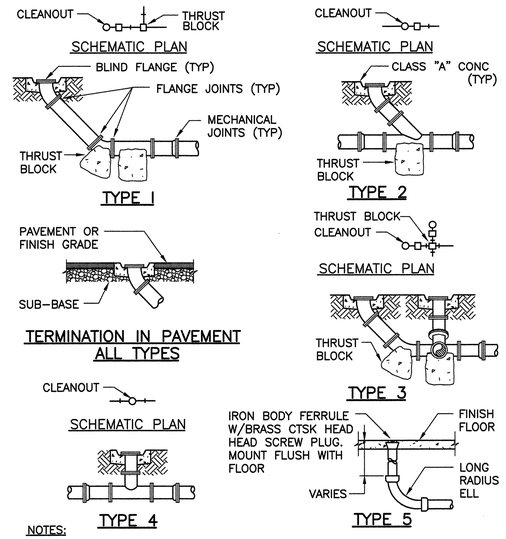

NOTES:

1. ALL THRUST BLOCKS SHALL BE PLACED PER TYPICAL DETAIL P102.
2. CONCRETE RING SHALL BE PLACED AFTER PAVEMENT PLACEMENT.
3. ALL FLANGES CAST IN CONCRETE SHALL BE TAPPED TO ALLOW THE INSTALLATION OF BLIND FLANGES WITH CAP SCREWS.
4. CLEANOUT PIPE SHALL BE SAME SIZE AS LINE PIPE.
5. CONCRETE RING SHALL BE FLANGE OD + 8". MINIMUM RING THICKNESS SHALL BE 4".
6. FOR CLEANOUTS IN YARD AREA, POUR 12" SQUARE CONC PAD 4" THICK.

P004 TYP S — CLEANOUTS

11-01-96

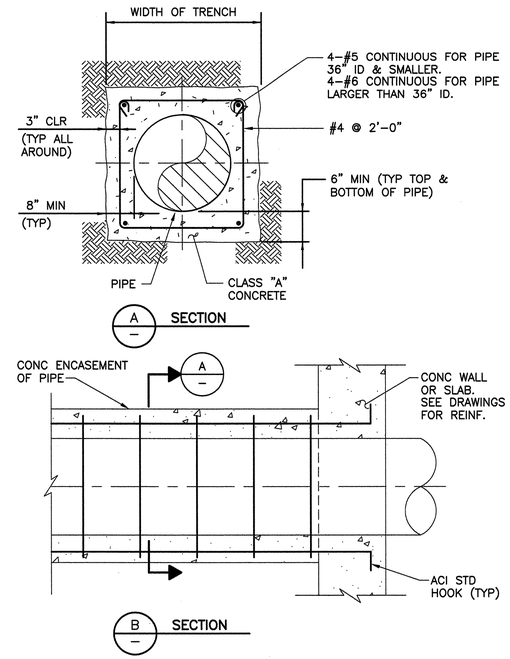

P040 TYP S — CONCRETE ENCASEMENT OF PIPE

09-01-00

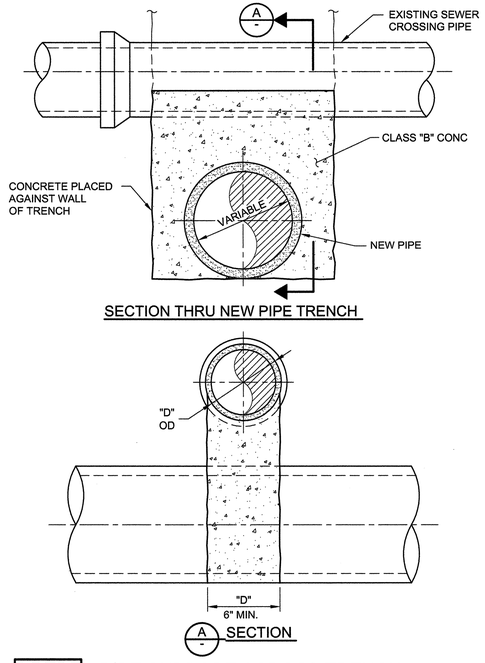

P048 TYP — PIPE SUPPORT ACROSS TRENCH

08-01-05

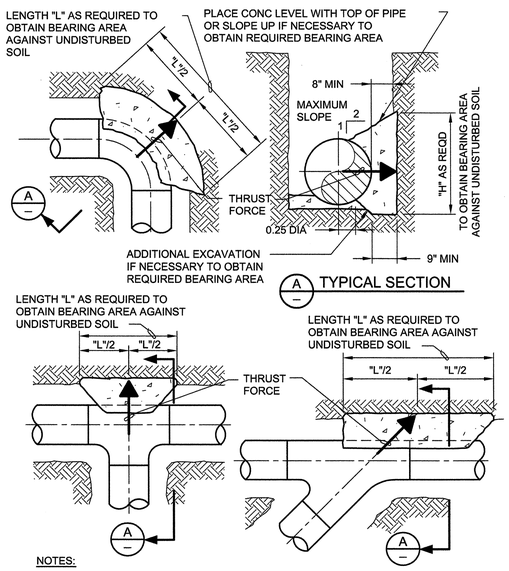

NOTES:

1. BEARING AREA IS THE AREA REQUIRED TO OBTAIN A MAXIMUM SOIL LOADING OF 200 PSF PER FOOT OF DEPTH TO A MAXIMUM VALUE OF 1500 PSF WHEN THE PIPE IS SUBJECTED TO ITS TEST PRESSURE, OR BEARING AREA SHOWN ON DRAWINGS.
2. CONCRETE SHALL BE CLASS "A" OR "C".
3. THRUST BLOCK SHALL BEAR ON UNDISTURBED SOIL.

P102 TYP NS — PIPE THRUST BLOCK

06-01-03

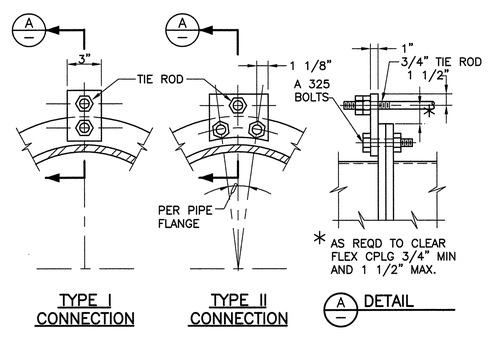

NOTES:

1. ALL EXPOSED FLEXIBLE COUPLINGS SHALL HAVE TIE RODS UNLESS SPECIFICALLY INDICATED OTHERWISE ON THE DRAWINGS.
2. PIPE THRUST SHALL BE BASED ON TEST PRESSURE.
3. PIPE THRUST = 0.7854 x D^2 x TEST PRESSURE, WHERE D IS PIPE OD.
4. MINIMUM TIE ROD YIELD 48,000 PSI.
5. FOR THRUSTS GREATER THAN 30,000 POUNDS, ADD ONE 3/4 INCH DIAMETER ROD FOR EVERY 6,000 POUNDS INCREASE IN THRUST.
6. CONTRACTOR MAY USE ONE INCH DIAMETER ROD FOR THRUSTS GREATER THAN 30,000 POUNDS. NUMBER OF ONE INCH RODS = NUMBER OF 3/4 INCH RODS x 0.5625. ROUND OFF TO THE NEXT LARGER NUMBER.
7. ALL ROD CONNECTIONS SHALL BE TYPE II FOR THRUSTS GREATER THAN 30,000 POUNDS.
8. GRIND ALL CORNERS SMOOTH.

P110 TYP — DUCTILE IRON PIPE FLEXIBLE COUPLING TIE DOWN

SHEET 1 OF 2

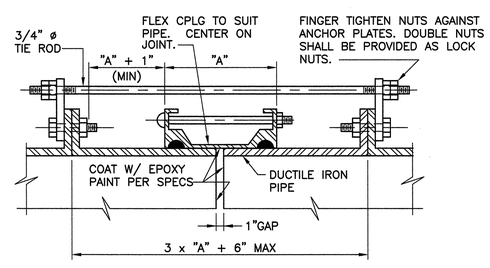

ROD SCHEDULE FOR DIP		
PIPE THRUST. SEE NOTE 2.	TYPE OF CONNECTION	NO RODS
0-6,000#	I	2
6,001-12,000#	II	2
12,001-18,000#	II	3
18,001-24,000#	II	4
24,001-30,000#	II	5

NOTE:

1. REFER TO NOTES ON SHEET 1 OF 2.

P110 TYP — DUCTILE IRON PIPE FLEXIBLE COUPLING TIE DOWN

SHEET 2 OF 2

VERIFY SCALES

BAR IS ONE INCH ON ORIGINAL DRAWING

0 1"

IF NOT ONE INCH ON THIS SHEET ADJUST SCALES ACCORDINGLY

DESIGNED	JBR
DRAWN	ARE
CHECKED	GAG
DATE	OCTOBER 2010

carollo

REV.	DATE	DESCRIPTION	BY	APP'D

CARSON CITY PUBLIC WORKS
NORTH LIFT PUMP STATION IMPROVEMENTS
CARSON CITY CIP NO. 5.0609

TYPICAL

TYPICAL DETAILS VII

DRAWING NO. T-7

SHEET NO. 49 OF 55

Last Saved By: AEvans 8-20-10 11:28am
C:\pw_working\projectwise\aevans\dms82532\T-07 10-11-10 04:41pm AEvans XREFS: G-BDR

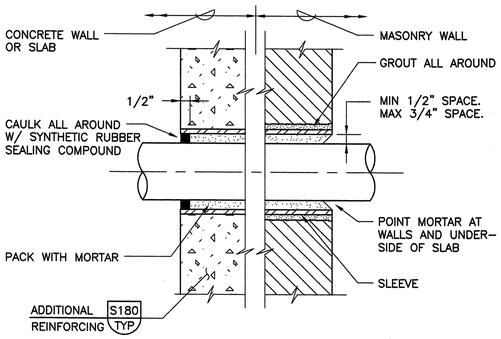

NOTES:

1. 6"ø DIAMETER SLEEVES AND SMALLER SHALL BE SCHEDULE 40 STEEL PIPE OR SCHEDULE 80 PVC PIPE.
2. SLEEVES LARGER THAN 6"ø SHALL BE 1/4" THICK STEEL PIPE.
3. STEEL SLEEVE SHALL BE HOT-DIP GALVANIZED AFTER FABRICATION.
4. SLEEVES FOR ELECTRICAL CONDUIT SHALL BE SCHEDULE 80 PVC.

P302 TYP — SLEEVE INSTALLATION THROUGH DRY WALLS AND FLOOR SLABS

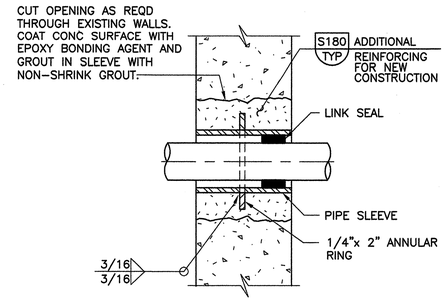

NOTES:

1. FOR NEW CONSTRUCTION, SLEEVES SHALL BE CAST INTO WALL. BLOCKOUTS AND SUBSEQUENT GROUTING IN SLEEVES WILL NOT BE PERMITTED UNLESS A KEYED WATERSTOP JOINT IS PROVIDED.
2. 6"ø SLEEVES AND SMALLER SHALL BE SCH 40 STL PIPE.
3. SLEEVES LARGER THAN 6"ø SHALL BE 1/4" THICK STL PIPE.
4. IN WALLS THICKER THAN 12", LINK SEAL SHALL BE INSTALLED AT BOTH ENDS OF WALL SLEEVE. SLEEVE DIAMETER SHALL BE PER LINK SEAL MANUFACTURER'S RECOMMENDATION.
5. SLEEVE SHALL BE HOT-DIP GALVANIZED AFTER FABRICATION.

P304 TYP — SLEEVE INSTALLATION THROUGH WALLS AND FLOOR SLABS

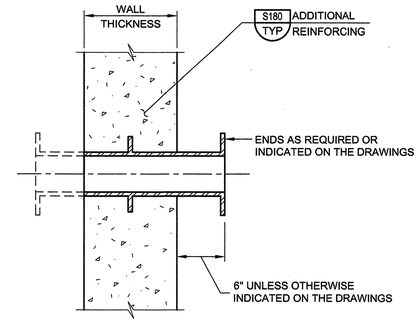

P312 TYP N — WALL THIMBLE FOR DIP

08-01-05

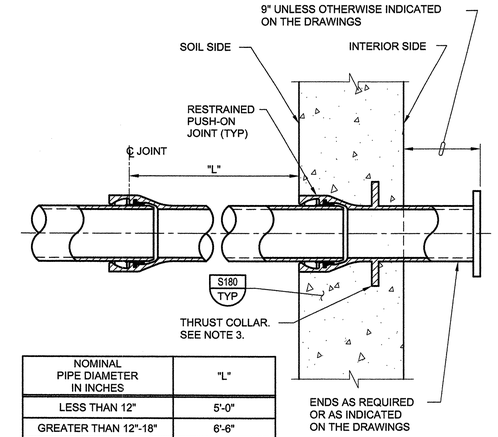

NOMINAL PIPE DIAMETER IN INCHES	"L"
LESS THAN 12"	5'-0"
GREATER THAN 12"-18"	6'-6"
GREATER THAN 18"-24"	7'-9"
GREATER THAN 24"-36"	12'-9"
GREATER THAN 36"	STANDARD PIPE LENGTH

NOTES:

1. FLEXIBLE CONNECTION IS DESIGNED TO ACCOMMODATE SETTLEMENT AND EARTHQUAKE MOVEMENT.
2. PIPES SHALL BE INSTALLED STRAIGHT WITHOUT HORIZONTAL OR VERTICAL OFFSET. DO NOT USE JOINT ROTATION TO MAKE UP MISALIGNED PIPE.
3. WALL PIPE WITH WEEP RING (THRUST COLLAR) SHALL BE CAPABLE OF RESISTING THRUST.

P342 TYP N — RESTRAINED DIP FLEXIBLE CONNECTION AT WALL PENETRATION

08-01-05

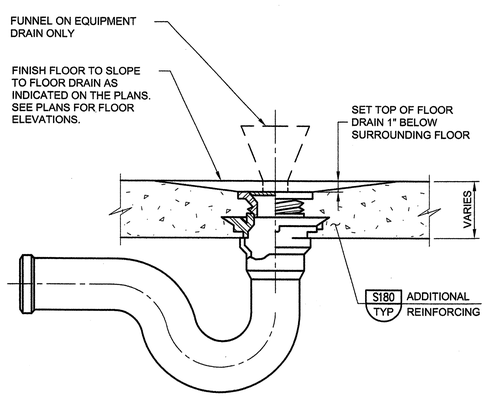

NOTE:

1. PROVIDE 12" RADIUS SLOPE TO EQUIPMENT DRAINS WHERE FLOOR DOES NOT SLOPE TO DRAIN.

P410 TYP S — FLOOR DRAIN OR EQUIPMENT DRAIN

08-01-05

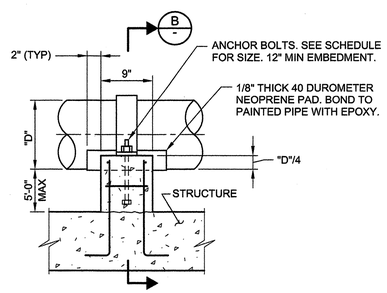

A — SECTION-SUPPORT AT STRUCTURE

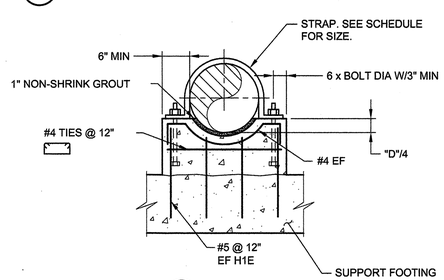

B — SECTION

P602 TYP N — CONCRETE PIPE SUPPORT

SHEET 1 OF 2 08-01-05

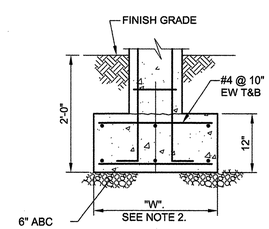

C — SECTION-ISOLATED SUPPORT W/FOOTING

SCHEDULE		
PIPE SIZE	STRAP SIZE	ANCHOR BOLT DIA
8"-12"	FB 1/4" x 4"	1/2"Ø
14"-24"	FB 5/16" x 4"	5/8"Ø
26"-36"	FB 3/8" x 4"	3/4"Ø

NOTES:

1. IF SUPPORT IS SUBMERGED OR LOCATED BELOW THE TOP OF WALL IN WATER BEARING STRUCTURE, MATERIAL FOR ANCHOR BOLTS AND STRAP SHALL BE STAINLESS STEEL. IN ALL OTHER AREAS, MATERIAL FOR ANCHOR BOLTS AND STRAP SHALL BE HOT-DIP GALVANIZED STEEL UNLESS OTHERWISE INDICATED ON THE DRAWINGS.
2. THE WIDTH OF THE FOOTING "W" = 2'-6". THE LENGTH OF THE FOOTING = "D" + 2'-0".

P602 TYP N — CONCRETE PIPE SUPPORT

SHEET 2 OF 2 08-01-05

VERIFY SCALES: BAR IS ONE INCH ON ORIGINAL DRAWING. 0 — 1". IF NOT ONE INCH ON THIS SHEET, ADJUST SCALES ACCORDINGLY

DESIGNED	JBR
DRAWN	ARE
CHECKED	GAG
DATE	OCTOBER 2010

carollo

JOHN B. RICHARDSON — STATE OF NEVADA — PROFESSIONAL ENGINEER — No. 9705 — Exp. 12/31/11 — CIVIL — 10/8/10

REV.	DATE	DESCRIPTION	BY	APP'D

CARSON CITY PUBLIC WORKS
NORTH LIFT PUMP STATION IMPROVEMENTS
CARSON CITY CIP NO. 5.0609

TYPICAL
TYPICAL DETAILS VIII

DRAWING NO. T-8

SHEET NO. 50 OF 55

Last Saved By: AEvans 9-20-10 11:28am

C:\pw_working\projectwise\aevans\dms82532\T-08 10-11-10 04:42pm AEvans XREFS: G-BDR

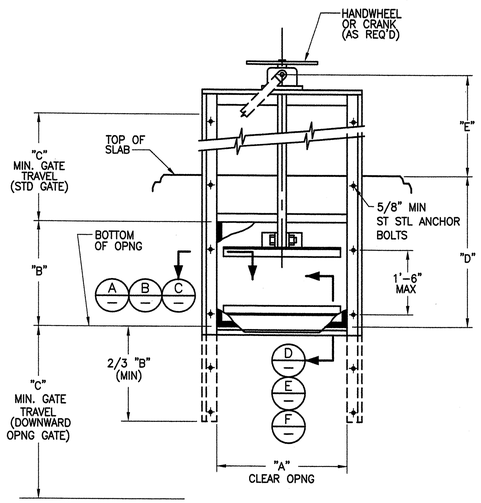

NOTES

1. GATE DIMENSIONS AS INDICATED ON PLANS AND SLIDE GATE SCHEDULE.

P710 TYP SLIDE GATE
SHEET 1 OF 2 REV 9/14/99

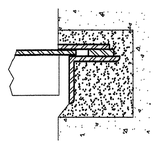

A EMBEDDED FRAME

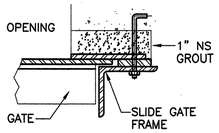

B FACE MOUNTED FLAT BACK FRAME

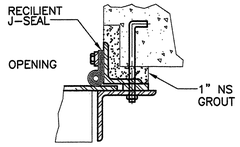

C FACE MOUNTED SPIGOT BACK FRAME

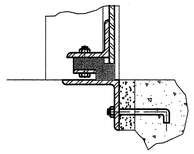

D FLUSH BOTTOM WALL FACE MOUNTED

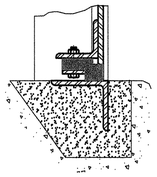

E FLUSH BOTTOM

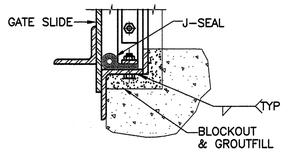

F WEIR GATE INVERT

P710 TYP SLIDE GATE
SHEET 2 OF 2 REV 9/14/99

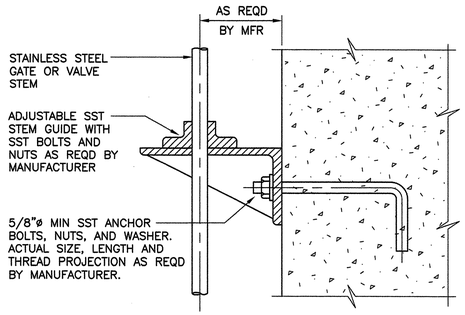

P750 TYP STEM GUIDE

VERIFY SCALES
BAR IS ONE INCH ON ORIGINAL DRAWING
0 1"
IF NOT ONE INCH ON THIS SHEET, ADJUST SCALES ACCORDINGLY

DESIGNED	DRAWN	CHECKED	DATE
JBR	ARE	GAG	OCTOBER 2010

carollo

STATE OF NEVADA
JOHN B. RICHARDSON
Exp. 12/31/11
PROFESSIONAL ENGINEER
10/4/10

REV.	DATE	DESCRIPTION	BY	APP'D

CARSON CITY PUBLIC WORKS
NORTH LIFT PUMP STATION IMPROVEMENTS
CARSON CITY CIP NO. 5.0609

TYPICAL

TYPICAL DETAILS IX

DRAWING NO.
T-9

SHEET NO.
51 OF 55

Last Saved By: AEvans 8-20-10 11:29am

C:\pw_working\projectwise\aevans\dms82532\T-09 10-11-10 04:42pm AEvans XREFS: G-BDR

1. CONCRETE CONSTRUCTION SHALL COMPLY WITH ACI "BUILDING CODE REQUIREMENTS FOR STRUCTURAL CONCRETE" (ACI 318).
2. UNLESS OTHERWISE INDICATED ON THE DRAWINGS, MINIMUM REINFORCEMENT OF CONCRETE WALLS OR SLABS SHALL BE:
   10" THICK OR LESS - USE #5 @ 12" EW
   MORE THAN 10" THICK - USE #5 @ 12" EWEF
3. WALL REINFORCEMENT AT CORNERS OR JUNCTIONS OF WALLS SHALL BE CONTINUOUS, LAPPED, OR TERMINATED IN AN ACI STANDARD 90 DEGREE HOOK. LAP SPLICES SHALL CONFORM WITH NOTE 12.
4. UNLESS OTHERWISE INDICATED ON THE DRAWINGS, BARS SHALL BE DOWELED. DOWELS SHALL BE THE SAME SIZE AND SPACING AS THE REINFORCEMENT WHICH IS SPLICED TO THE DOWELS.
5. SLABS, BEAMS, AND COLUMN REINFORCING BARS SHALL HAVE A MINIMUM EXTENSION OR ANCHORAGE INTO SUPPORTS IN ACCORDANCE WITH ACI 318.
6. STIRRUP SUPPORT BARS SHALL BE PROVIDED TO SECURE TOP BARS AGAINST DISPLACEMENT AS REQUIRED.
7. UNLESS OTHERWISE INDICATED ON THE DRAWINGS, CONCRETE COVER OVER #11 AND SMALLER REINF BARS SHALL BE AS FOLLOWS:
   A. SLABS AND JOISTS:
      FORMED CONCRETE SURFACES AND UNFORMED TOP SURFACES FOR DRY CONDITIONS:
         #7 BARS AND SMALLER.....1"
         #8 BARS AND LARGER.....1 1/2"
      FORMED CONCRETE SURFACES AND UNFORMED TOP SURFACES EXPOSED TO WEATHER, IN CONTACT WITH SOIL OR WATER, OR LOCATED OVER WATER.....2"
   B. BEAMS AND COLUMNS:
      FORMED CONCRETE SURFACES FOR DRY CONDITIONS:
         STIRRUPS, SPIRALS, AND TIES.....1 1/2"
         PRINCIPAL REINFORCEMENT.....2"
      FORMED CONCRETE SURFACES EXPOSED TO WEATHER, IN CONTACT WITH SOIL OR WATER, OR BEAMS LOCATED OVER WATER:
         STIRRUPS AND TIES.....2"
         PRINCIPAL REINFORCEMENT.....2 1/2"
   C. WALLS:
      FORMED CONCRETE SURFACES FOR DRY CONDITIONS:
         #7 BARS AND SMALLER.....1"
         #8 BARS AND LARGER.....1 1/2"
      FORMED CONCRETE SURFACES EXPOSED TO WEATHER, OR IN CONTACT WITH SOIL OR WATER.....2"

S101 TYP S — REINFORCED CONCRETE NOTES — SHEET 1 OF 3 — 06-01-03

D. FOOTINGS AND BASE SLABS:
   FORMED VERTICAL CONCRETE SURFACES.....2"
   AT UNFORMED CONCRETE SURFACES CAST AGAINST THE SOIL OR CONCRETE WORK MATS.....3"
   TOP SURFACE OF FOOTINGS AND BASE SLABS.....SAME AS SLABS
8. KEYWAYS AND WATERSTOP SHALL END 3" BELOW THE TOP OF WALLS, UNLESS THERE IS A SLAB ON TOP OF THE WALL, IN WHICH CASE IT SHALL END AT THE BOTTOM OF THE SLAB. IN JOINTS WHERE WATERSTOP TERMINATES AT ADJOINING SLAB OR WALL, WATERSTOP SHALL BE EMBEDDED IN ADJOINING SLAB OR WALL A MINIMUM OF 6".
9. CONCRETE CURING SHALL BE IN ACCORDANCE WITH THE CONTRACT DOCUMENTS. WHERE WATER CURING IS REQUIRED, MEMBRANE CURING IS NOT ALLOWED. THE CONTRACTOR IS WARNED THAT WATER CURING IS DIFFICULT AT TIMES DUE TO WIND AND DRY CONDITIONS. THE CONTRACTOR SHALL STUDY REQUIREMENTS AND SHALL FURNISH ADEQUATE SYSTEMS TO PROVIDE WATER CURING WHERE REQUIRED. TOP OF WALLS SHALL BE KEPT VISIBLY MOIST AT ALL TIMES AND SHALL BE FLOODED NOT LESS THAN THREE TIMES DAILY.
10. WATERSTOP SHALL BE PLACED IN CONSTRUCTION, CONTRACTION, AND EXPANSION JOINTS IN WATERBEARING SLABS AND WALLS UNLESS OTHERWISE INDICATED ON THE DRAWINGS, AND IN WALLS AND SLABS SUBJECTED TO GROUNDWATER. WATERSTOP IN THE WALLS SHALL BE CARRIED INTO SLABS AND SHALL BE SPLICED WITH THE WATERSTOP IN THE SLABS.
11. NO BACKFILL SHALL BE PLACED AGAINST WALLS UNTIL CONCRETE HAS REACHED THE SPECIFIED STRENGTH AND THE CONNECTING SLABS AND BEAMS HAVE BEEN CAST AND HAVE REACHED THE SPECIFIED STRENGTH.
12. LAP SPLICES:
   A. WHEN MULTIPLE BARS ARE SPLICED AT THE SAME SECTION, THE CLEAR BAR SPACING IS THE MINIMUM CLEAR DISTANCE BETWEEN THE BARS OUTSIDE THE SPLICE LENGTH LESS ONE BAR DIAMETER.
   B. UNLESS OTHERWISE INDICATED ON THE DRAWINGS, THE BARS AT A LAP SPLICE SHALL BE IN CONTACT WITH EACH OTHER.
   C. FOLLOWING TABULATED VALUES ARE CALCULATED FOR:
      FY = 60,000 PSI FOR REINFORCING BARS
      F'C = 4,000 PSI FOR CONCRETE
   D. TOP BARS ARE HORIZONTAL REINFORCEMENT SO PLACED THAT MORE THAN 12 INCHES OF FRESH CONCRETE IS CAST IN THE MEMBER BELOW THE BAR.
   E. HORIZONTAL BARS IN CIRCULAR WALLS OF HYDRAULIC STRUCTURES SHALL BE SPLICED WITH TOP BAR LAP SPLICES. ADJACENT LAP SPLICES SHALL BE STAGGERED HORIZONTALLY BY NOT LESS THAN ONE LAP LENGTH NOR 3 FEET FROM CENTER OF LAP BELOW TO ADJACENT CENTER OF LAP ABOVE, AND SHALL NOT COINCIDE IN VERTICAL ARRAYS MORE FREQUENTLY THAN EVERY THIRD BAR.

S101 TYP S — REINFORCED CONCRETE NOTES — SHEET 2 OF 3 — 06-01-03

REINFORCING BAR LAP SPLICE

BAR SIZE	MINIMUM COVER (BAR DIA)	MINIMUM CLEAR BAR SPACING (BAR DIA)	LAP SPLICE LENGTH (INCHES)	
			TOP BARS	OTHER BARS
#4	MORE THAN 1	MORE THAN 2	32 *	25 *
	MORE THAN 2	MORE THAN 4	20	15
#5	MORE THAN 1	MORE THAN 2	40 *	31 *
	MORE THAN 2	MORE THAN 4	26	20
#6	MORE THAN 1	MORE THAN 2	48 *	37 *
	MORE THAN 2	MORE THAN 4	30	24
#7	MORE THAN 1	MORE THAN 2	70 *	54 *
	MORE THAN 2	MORE THAN 4	43	33
#8	MORE THAN 1	MORE THAN 2	81 *	62 *
	MORE THAN 2	MORE THAN 4	50	38
#9	MORE THAN 1	MORE THAN 2	90 *	70 *
	MORE THAN 2	MORE THAN 4	56	42
#10	MORE THAN 1	MORE THAN 2	104 *	81 *
	MORE THAN 2	MORE THAN 4	62	48
#11	MORE THAN 1	MORE THAN 2	114 *	88 *
	MORE THAN 2	MORE THAN 4	69	54

NOTES:
1. THE SPLICE LENGTH SHALL BE SELECTED ONLY WHEN BOTH REQUIREMENTS OF THE COVER AND BAR SPACING ARE SATISFIED.
2. * IF THE CLEAR SPACING IS LESS THAN OR EQUAL TO TWO BAR DIAMETERS OR THE COVER IS LESS THAN OR EQUAL TO ONE BAR DIAMETER, THE LAP SPLICE LENGTH SHALL BE INCREASED BY 50 PERCENT.

S101 TYP S — REINFORCED CONCRETE NOTES — SHEET 3 OF 3 — 06-01-03

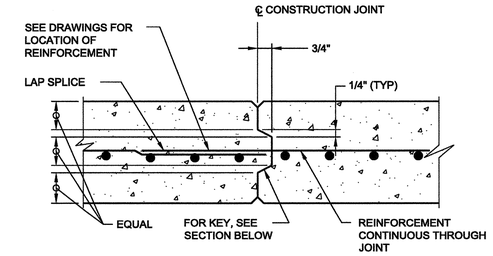

NON-WATER BEARING WALL OR SLAB

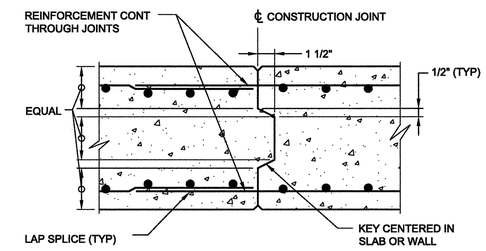

NON-WATER BEARING SLAB OR WALL

S110 TYP S — CONSTRUCTION JOINT — SHEET 1 OF 2 — 03-16-09

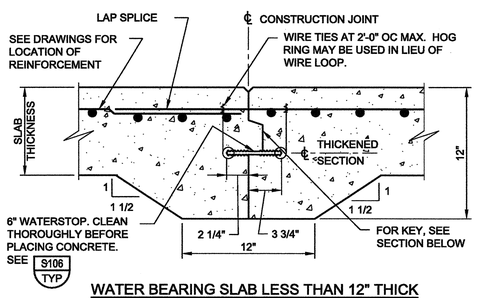

WATER BEARING SLAB LESS THAN 12" THICK

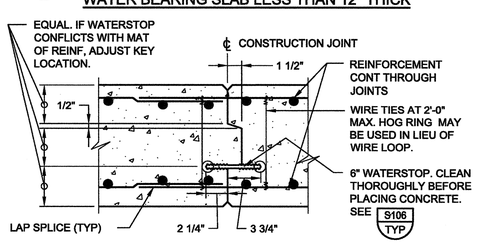

WATER BEARING SLAB OR WALL

NOTES:
1. SANDBLAST OR WATERBLAST JOINT AND REINFORCEMENT PRIOR TO PLACING CONCRETE FOR NEXT SLAB OR WALL.
2. FOR WALLS, FORM ALL JOINT EDGES AT 1/4" CHAMFER.
3. FOR SLABS, EDGE TOP OF EXPOSED SLAB JOINT EDGES AT 1/4" RADIUS.
4. FOR UNDERSIDE OF EXPOSED SLABS, FORM JOINT EDGES AT 1/4" CHAMFER.

S110 TYP S — CONSTRUCTION JOINT — SHEET 2 OF 2 — 03-16-09

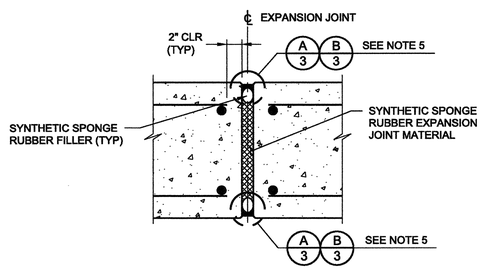

NON-WATER BEARING SLAB OR WALL

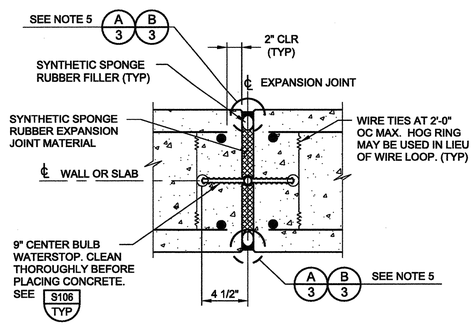

WATER BEARING SLAB OR WALL

S130 TYP NS — EXPANSION JOINT — SHEET 1 OF 3 — 03-16-09

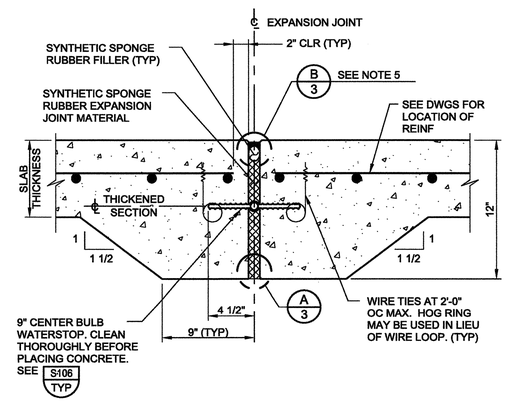

WATER BEARING SLAB LESS THAN 12" THICK

S130 TYP NS — EXPANSION JOINT — SHEET 2 OF 3 — 03-16-09

VERIFY SCALES
BAR IS ONE INCH ON ORIGINAL DRAWING
0 — 1"
IF NOT ONE INCH ON THIS SHEET, ADJUST SCALES ACCORDINGLY

DESIGNED JBR
DRAWN ARE
CHECKED GAG
DATE OCTOBER 2010

carollo

STATE OF NEVADA — JOEL D. SMASON — CIVIL — No. 13370 — PROFESSIONAL ENGINEER — 10-13-10

REV.	DATE	DESCRIPTION	BY	APP'D

CARSON CITY PUBLIC WORKS
NORTH LIFT PUMP STATION IMPROVEMENTS
CARSON CITY CIP NO. 5.0609

TYPICAL
TYPICAL DETAILS X

DRAWING NO. T-10

SHEET NO. 52 OF 55

Last Saved By: $(GETPROP)??
c:\pw_working\projectwise\adorbin\dms82540\G-BDR 9-12-10 04:30pm ADorbin XREFS: $(XREFS)??

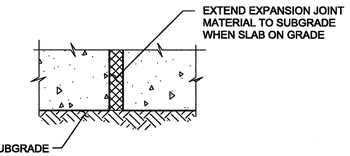

A/1 DETAIL - SLAB ON GRADE

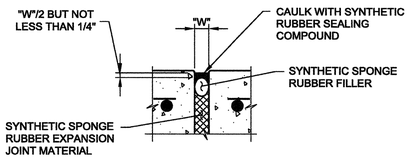

B/1 DETAIL

NOTES:

1. FOR WALLS, FORM ALL JOINT EDGES AT 1/4" CHAMFER.
2. FOR SLABS, EDGE TOP OF EXPOSED SLAB JOINT EDGES AT 1/4" RADIUS.
3. FOR UNDERSIDE OF EXPOSED SLABS, FORM JOINT EDGES AT 1/4" CHAMFER.
4. "W" = 1" THICK UNLESS OTHERWISE INDICATED ON THE DRAWINGS. MIN JOINT WIDTH = 3/8".
5. USE A/- AT UNDERSIDE OF SLABS ON GRADE ONLY. USE B/- AT ALL OTHER LOCATIONS.

S130 TYP NS — EXPANSION JOINT — SHEET 3 OF 3 — 03-16-09

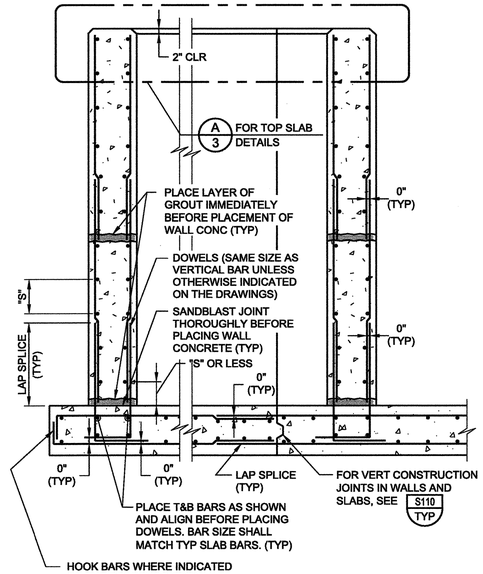

NOTE:

1. "S" = BAR SPACING INDICATED ON THE DRAWINGS

WITHOUT WATERSTOP

S140 TYP S — WALL AND SLAB JOINTS — SHEET 1 OF 3 — 08-01-05

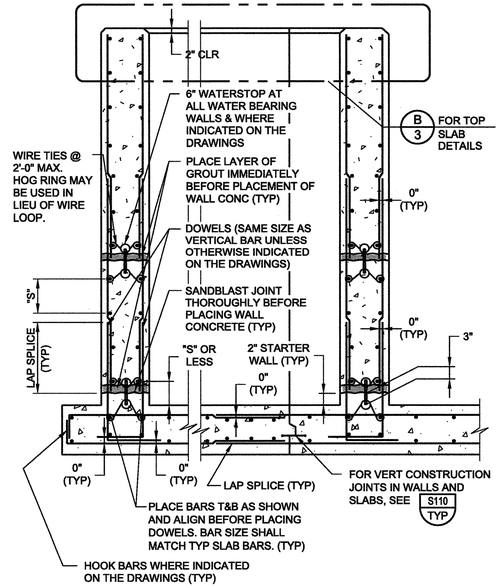

NOTE:

1. "S" = BAR SPACING INDICATED ON THE DRAWINGS

WITH WATERSTOP

S140 TYP S — WALL AND SLAB JOINTS — SHEET 2 OF 3 — 08-01-05

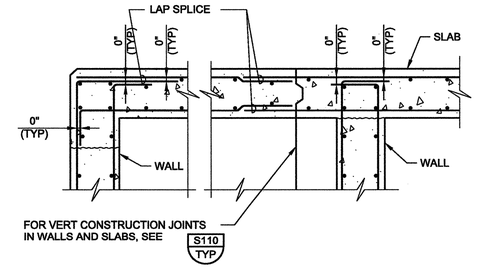

A/1 TOP SLAB WITHOUT WATERSTOP

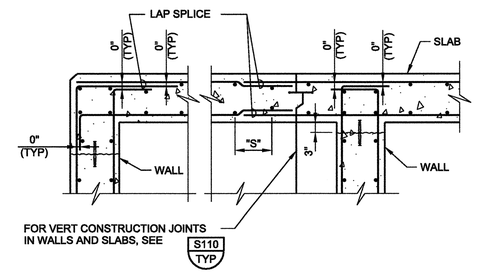

B/2 TOP SLAB WITH WATERSTOP

S140 TYP S — WALL AND SLAB JOINTS — SHEET 3 OF 3 — 08-01-05

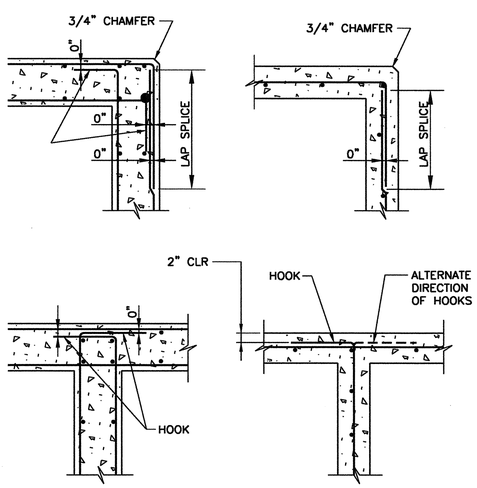

NOTE:

1. ALL HOOKS SHALL BE ACI STD 90 DEGREE HOOKS.

S144 TYP S — REINFORCEMENT AT CORNERS AND JUNCTIONS — 09-01-00

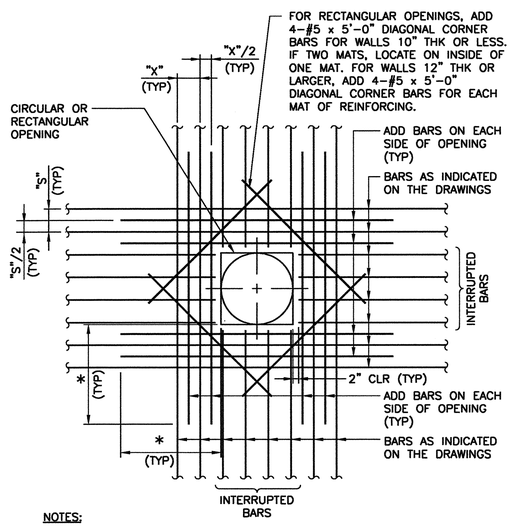

NOTES:

1. AREA OF ADD BARS AT EACH EDGE OF OPENING IN EACH DIRECTION SHALL MATCH 1/2 THE CROSS SECTIONAL AREA OF THE INTERRUPTED BARS.
2. PROVIDE STANDARD ACI HOOKS ON BARS IF STRAIGHT EXTENSION, PAST THE OPENING, CANNOT BE ACHIEVED.
3. PLACE ADD BARS IN SAME PLANES AS INTERRUPTED REINFORCING.
4. PLACE #5 DIAGONAL BARS UNDER INTERRUPTED REINFORCING.
5. * DIMENSION EQUALS OPENING DIMENSION MEASURED PERPENDICULAR TO ADD BARS PLUS LAP SPLICE LENGTH.

S180 TYP SN — ADDITIONAL REINFORCING AT OPENINGS IN CONCRETE SLABS OR WALLS — 01-22-99

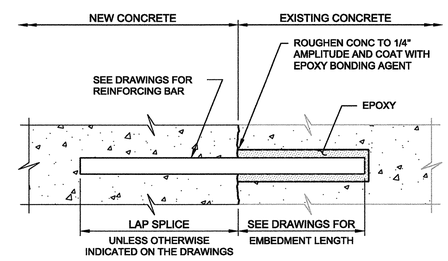

REINFORCING BARS

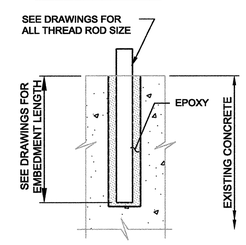

NOTE:

1. INSTALLATION OF REINFORCING BARS AND ALL THREAD RODS AS INDICATED IN THE SPECIFICATIONS.

ALL-THREAD RODS

S194 TYP — EPOXY BONDED REINFORCING BARS OR ALL THREAD RODS — 12-07-05

VERIFY SCALES
BAR IS ONE INCH ON ORIGINAL DRAWING
0 — 1"
IF NOT ONE INCH ON THIS SHEET, ADJUST SCALES ACCORDINGLY

DESIGNED	JBR
DRAWN	ARE
CHECKED	GAG
DATE	OCTOBER 2010

carollo

STATE OF NEVADA — JOEL D. SIMASON — CIVIL — 13104 — PROFESSIONAL ENGINEER — 10-13-10

REV.	DATE	DESCRIPTION	BY	APPD

CARSON CITY PUBLIC WORKS
NORTH LIFT PUMP STATION IMPROVEMENTS
CARSON CITY CIP NO. 5.0609

TYPICAL
TYPICAL DETAILS XI

DRAWING NO. T-11

SHEET NO. 53 OF 55

Last Saved By: $(GETPROP)??
c:\pw_working\projectwise\adorbin\dms82540\G-BDR 9-12-10 04:30pm ADorbin XREFS: $(XREFS)??

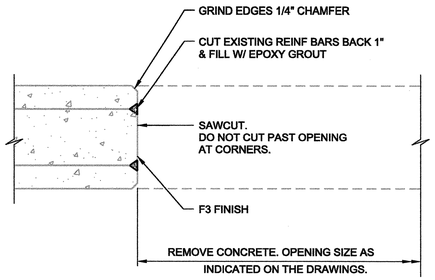

A HEAD OR JAMB DETAIL

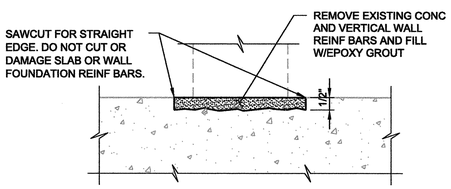

B SILL DETAIL

S198 TYP N — OPENING THROUGH EXISTING CONCRETE

08-01-05

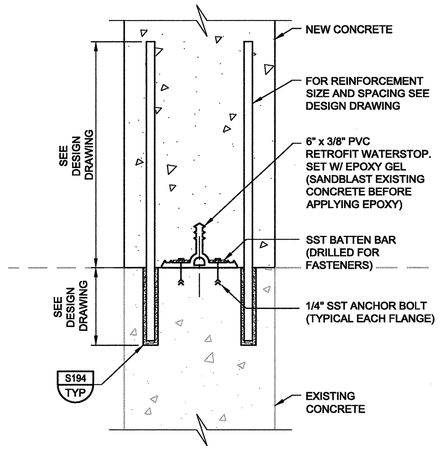

NOTES:

1. GREENSTREAK STYLE 609 WATERSTOP (OR EQUAL)

S203 TYP N — WATERSTOP AT EXISTING CONCRETE - CONSTRUCTION JOINT

S203-N-P 03-22-06

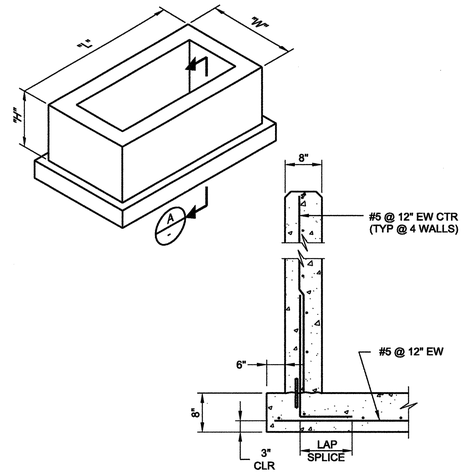

A SECTION

NOTES:

1. "L", "W", AND "H" AS INDICATED ON THE DRAWINGS.
2. MAX DIMENSIONS: "L" = 4'-0", "H" = 4'-0", "W" = 4'-0".

S230 TYP — CONCRETE BOX REINFORCING

08-01-05

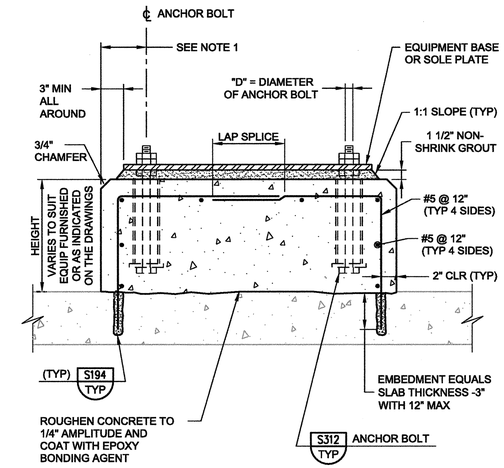

NOTE:

1. THE EDGE DISTANCE ON THE ANCHOR BOLTS SHALL NOT BE LESS THAN 6" OR 8 x "D".

S304 TYP — EQUIPMENT BASE ON EXISTING CONCRETE SLAB

08-01-05

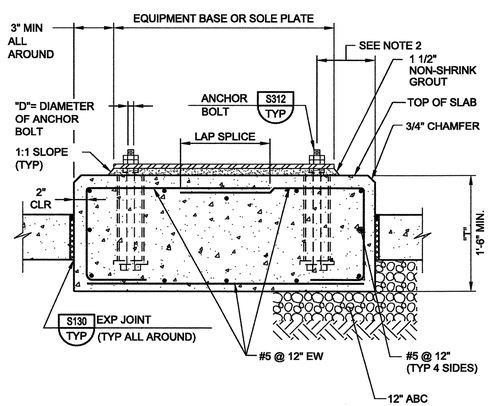

NOTES:

1. PAD DIMENSIONS AND ANCHOR BOLT SIZE SHALL CONFORM TO EQUIPMENT MANUFACTURER'S REQUIREMENTS.
2. THE EDGE DISTANCE ON THE ANCHOR BOLTS SHALL NOT BE LESS THAN 6" OR 8 x "D".
3. HEIGHT VARIES TO SUIT EQUIPMENT FURNISHED OR AS INDICATED ON THE DRAWINGS.

S306 TYP N — ISOLATED EQUIPMENT PAD

04-30-07

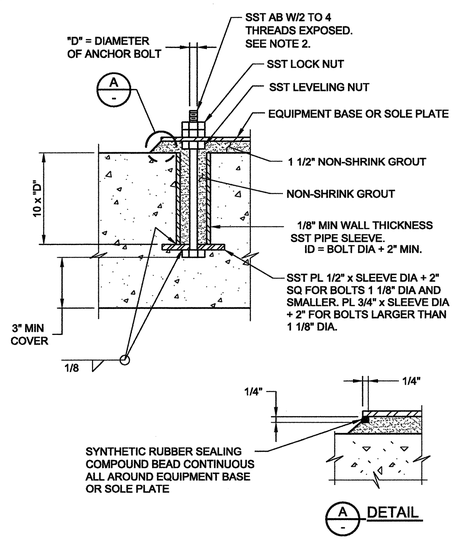

A DETAIL

NOTES:

1. ANCHOR BOLT DIAMETER AS INDICATED ON THE DRAWINGS. IF NOT INDICATED ON THE DRAWINGS, THE ANCHOR BOLT SIZE SHALL BE AS RECOMMENDED BY THE EQUIPMENT MANUFACTURER.
2. DO NOT USE ALL THREAD RODS AS A SUBSTITUTE FOR BOLTS WITH A BOLT HEAD.

S312 TYP N — ANCHOR BOLT

07-31-08

1. UNLESS OTHERWISE INDICATED ON THE DRAWINGS, ALL WALLS SHALL BE REINFORCED WITH A MINIMUM OF NUMBER 5 VERTICAL REINFORCING BARS AT 2'-8" AND NUMBER 5 HORIZONTAL REINFORCING BARS AT 4'-0". SEE NOTE 2 FOR ADDITIONAL REINFORCING BARS ADJACENT TO WALL OPENINGS.
2. A VERTICAL BAR SHALL BE PLACED AT ALL WALL CORNERS AND WALL INTERSECTIONS, AND A VERTICAL BAR SHALL BE PLACED IN EACH OF THE FIRST TWO CELLS AT EACH JAMB OF ALL WALL OPENINGS. THE BAR SIZE SHALL BE NUMBER 5 MINIMUM, BUT NOT SMALLER THAN THE TYPICAL VERTICAL WALL REINFORCING BARS.

S400 TYP S — MASONRY NOTES

08-01-05

VERIFY SCALES
BAR IS ONE INCH ON ORIGINAL DRAWING
0 1"
IF NOT ONE INCH ON THIS SHEET, ADJUST SCALES ACCORDINGLY

DESIGNED	JBR
DRAWN	ARE
CHECKED	GAG
DATE	OCTOBER 2010

carollo

REGISTERED PROFESSIONAL ENGINEER STATE OF NEVADA JAMES D. SIMASON 9-22-2 CIVIL

10-13-10

REV.	DATE	DESCRIPTION	BY	APPD

CARSON CITY PUBLIC WORKS
NORTH LIFT PUMP STATION IMPROVEMENTS
CARSON CITY CIP NO. 5.0609

TYPICAL
TYPICAL DETAILS XII

DRAWING NO.
T-12

SHEET NO.
54 OF 55

Last Saved By: $(GETPROP)??
c:\pw_working\projectwise\adorbin\dms82540\G-BDR 9-12-10 04:30pm ADorbin XREFS: $(XREFS)??

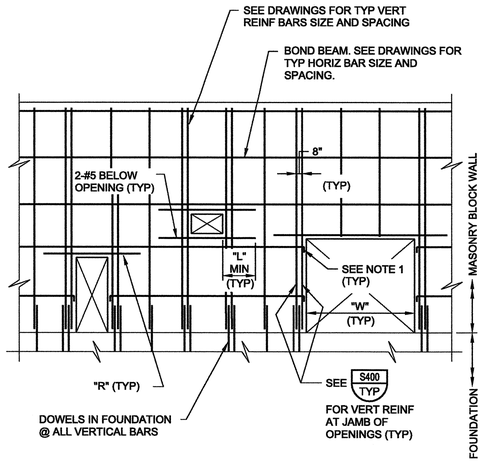

A WALL ELEVATION

NOTES:

1. ACI STANDARD 90° HOOK ON HORIZONTAL BARS AT OPENINGS.
2. FOR ADDITIONAL REINFORCING, SEE DRAWINGS.

S410 TYP NS — REINFORCED MASONRY WALL — SHEET 1 OF 2 — 06-01-03

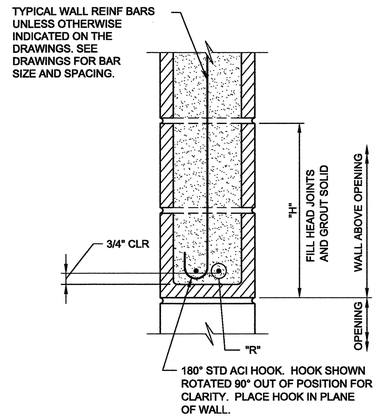

B SECTION OF LINTEL AT OPENING

LINTEL REINFORCEMENT SCHEDULE			
"W"	"R"	"L"	"H"
LESS THAN 5'-0"	2-#5	2'-6"	16"
GREATER THAN 5'-0" TO 7'-0"	2-#6	3'-0"	32"
GREATER THAN 7'-0" TO 12'-0"	2-#7	3'-6"	40"

S410 TYP NS — REINFORCED MASONRY WALL — SHEET 2 OF 2 — 06-01-03

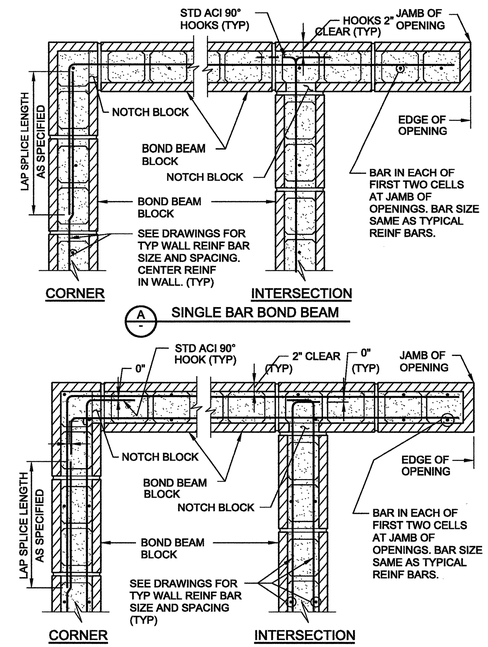

A SINGLE BAR BOND BEAM

B DOUBLE BAR BOND BEAM

S412 TYP S — REINFORCING AT MASONRY BOND BEAM — 06-01-03

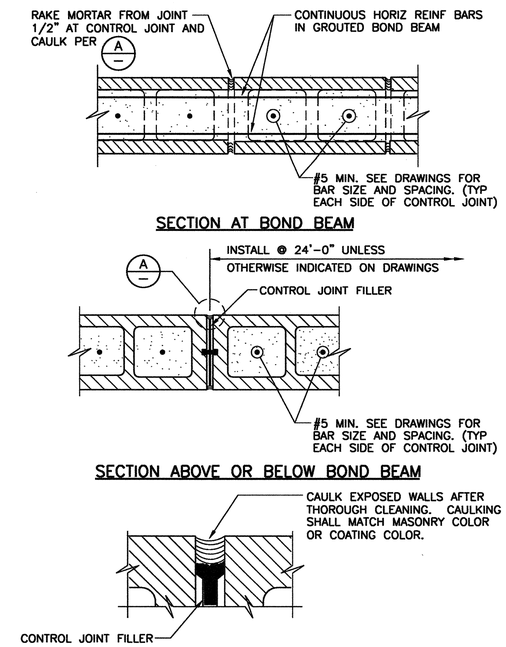

A DETAIL

S430 TYP S — MASONRY CONTROL JOINT — 01-22-99

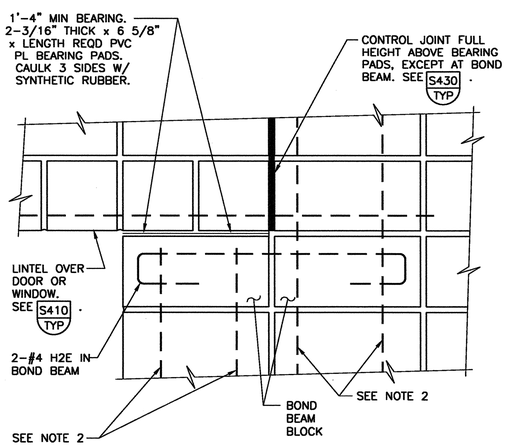

NOTES:

1. ALL BLOCKS BELOW LINTEL BEARING PADS SHALL BE GROUTED SOLID FULL HEIGHT. PROVIDE SMOOTH BEARING SURFACE UNDER PADS.
2. THE BAR SIZE SHALL BE NUMBER 5 MINIMUM, BUT NOT SMALLER THAN THE TYPICAL VERTICAL WALL REINFORCING BARS.

S432 TYP — CONTROL JOINT AT LINTEL — 11-01-96

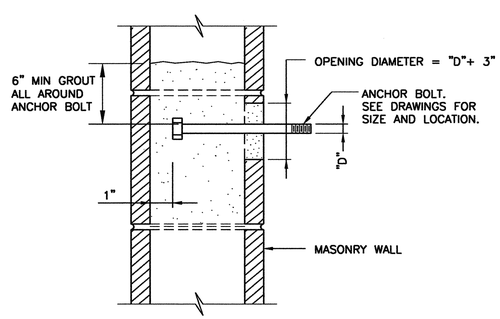

NOTES:

1. SET ANCHOR BOLTS WITH TEMPLATE.
2. CUT BLOCK WEB AS REQUIRED TO ALLOW PLACEMENT OF ANCHOR BOLT WITH 1/2" MINIMUM OF GROUT BETWEEN ANCHOR BOLT AND BLOCK.

S440 TYP — ANCHOR BOLTS IN MASONRY — 06-01-98

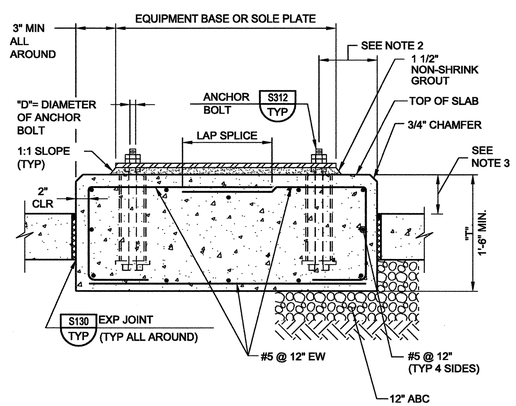

NOTES:

1. PAD DIMENSIONS AND ANCHOR BOLT SIZE SHALL CONFORM TO EQUIPMENT MANUFACTURER'S REQUIREMENTS.
2. THE EDGE DISTANCE ON THE ANCHOR BOLTS SHALL NOT BE LESS THAN 6" OR 8 x "D".
3. HEIGHT VARIES TO SUIT EQUIPMENT FURNISHED OR AS INDICATED ON THE DRAWINGS.

S306 TYP N — ISOLATED EQUIPMENT PAD — 04-30-07

VERIFY SCALES
BAR IS ONE INCH ON ORIGINAL DRAWING 0 — 1"
IF NOT ONE INCH ON THIS SHEET, ADJUST SCALES ACCORDINGLY

DESIGNED	JBR
DRAWN	ARE
CHECKED	GAG
DATE	OCTOBER 2010

carollo

STATE OF NEVADA PROFESSIONAL ENGINEER JOEL D. SMASON No. 12038 CIVIL 10-13-10

REV.	DATE	DESCRIPTION	BY	APP'D

CARSON CITY PUBLIC WORKS
NORTH LIFT PUMP STATION IMPROVEMENTS
CARSON CITY CIP NO. 5.0609

TYPICAL
TYPICAL DETAILS XIII

DRAWING NO. T-13

SHEET NO. 55 OF 55

Last Saved By: $(GETPROP)??
c:\pw_working\projectwise\adorbin\dms82540\G-BDR 9-12-10 04:30pm ADorbin XREFS: $(XREFS)??