EAST LONG STREET CDBG PEDESTRIAN IMPROVEMENTS

CARSON CITY, NEVADA

PROJECT 3.0906

BOARD OF SUPERVISORS

Bob Crowell	Mayor
Karen Abowd	Supervisor
Shelly Aldean	Supervisor
John McKenna	Supervisor
Molly Walt	Supervisor
Alan Glover	City Clerk

DESIGNED FOR:

CARSON CITY PUBLIC WORKS DEPARTMENT
OPERATIONS DIVISION
3505 BUTTI WAY
CARSON CITY, NV 89701
887-2355

GENERAL NOTES:

1. ALL WORK SHALL CONFORM TO THE "STANDARD SPECIFICATIONS FOR PUBLIC WORKS CONSTRUCTION" (SSPWC) AND THE "STANDARD DETAILS FOR PUBLIC WORKS CONSTRUCTION" (SDPWC) AS ADOPTED BY CARSON CITY. THE CONTRACTOR SHALL OBTAIN A PERMIT FOR PUBLIC WORKS CONSTRUCTION FROM THE CARSON CITY PERMIT CENTER PRIOR TO THE START OF CONSTRUCTION.

   ALL WORK IN NDOT RIGHT-OF-WAY SHALL CONFORM TO THE STATE OF NEVADA DEPARTMENT OF TRANSPORTATION STANDARD SPECIFICATIONS FOR ROAD AND BRIDGE CONSTRUCTION, 2001 EDITION AND THE STATE OF NEVADA DEPARTMENT OF TRANSPORTATION STANDARD PLANS FOR ROAD AND BRIDGE CONSTRUCTION, 2007 EDITION.
2. ALL TRAFFIC CONTROL AND BARRICADING WITHIN THE CARSON CITY RIGHT-OF-WAY SHALL CONFORM TO SECTION 100.33, 332.04 AND 332.05 OF THE STANDARD SPECIFICATIONS, PART VI OF THE MANUAL ON UNIFORM TRAFFIC CONTROL DEVICES, LATEST EDITION, AND THE UNR T2 CENTER, TEMPORARY TRAFFIC CONTROL GUIDELINES LATEST EDITION. A TRAFFIC CONTROL PLAN MUST BE SUBMITTED AND APPROVED BY THE CARSON CITY ENGINEERING DIVISION PRIOR TO ANY STREET CLOSURES.
3. THE CONTRACTOR SHALL CALL UNDERGROUND SERVICE ALERT "CALL BEFORE YOU DIG" (811) OR (1-800-227-2600) AT LEAST TWO (2) WORKING DAYS PRIOR TO START OF CONSTRUCTION AND COMPLY WITH THE REQUIREMENTS OF NRS AND NAC 455 THROUGHOUT THE COURSE OF THE WORK, SEWER SERVICE LATERALS ARE NOT OWNED OR MARKED BY CARSON CITY.
4. THE CONTRACTOR SHALL CALL THE CARSON CITY ENGINEERING DIVISION (887-2300) TWO (2) WORKING DAYS PRIOR TO THE START OF CONSTRUCTION. THE CONTRACTOR SHALL CALL ONE (1) WORKING DAY PRIOR TO REQUIRED INSPECTIONS AND TESTING. THE REQUIRED INSPECTIONS AND TESTING ARE LISTED ON THE INSPECTION RECORD ISSUED WITH EACH PERMIT. THE CONTRACTOR MUST HAVE THE PERMIT NUMBER AND THE DESCRIPTION LISTED ON THE INSPECTION RECORD TO SCHEDULE REQUIRED INSPECTIONS AND TESTING. FOR CITY CONTRACTED PROJECTS, THE CONTRACTOR SHALL SCHEDULE INSPECTIONS PER THE CONTRACT DOCUMENTS.
5. FINAL INSPECTIONS WILL BE PERFORMED BY CARSON CITY ENGINEERING DIVISION ACCORDING TO THE CARSON CITY INSPECTIONS AND TESTING PROCEDURES. NOTE: THESE PROCEDURES REQUIRE SUBMITTAL OF RECORD DRAWING PRINTS BY THE CONTRACTOR AND 10 WORKING DAYS TO PREPARE A FINAL PUNCH LIST. ALL CONDITIONS OF THE FINAL INSPECTION MUST BE COMPLETED PRIOR TO FINAL ACCEPTANCE OR ANY APPROVAL OF A CERTIFICATE OF OCCUPANCY BY THE CARSON CITY ENGINEERING DIVISION.
6. MODIFICATIONS TO THE APPROVED PLANS REQUIRES REVIEW AND APPROVAL BY THE CARSON CITY ENGINEERING DIVISION. WORK PERFORMED WITHOUT WRITTEN APPROVAL BY CARSON CITY ENGINEERING WILL REQUIRE REMOVAL AT THE CONTRACTORS EXPENSE.
7. THE APPROVED PLAN, PERMIT AND INSPECTION RECORD MUST BE ON THE JOB SITE AT ALL TIMES.
8. PLAN APPROVAL FOR SEWER AND WATER CONSTRUCTION SHALL EXPIRE ONE YEAR FROM DATE OF APPROVAL UNLESS CONSTRUCTION HAS BEEN INITIATED. (CCMC 12.06.180F, 12.01.140D)
9. THE CONTRACTOR WILL BE SOLELY AND COMPLETELY RESPONSIBLE FOR ACQUIRING A STORMWATER DISCHARGE PERMIT FROM THE NEVADA DIVISION OF ENVIRONMENTAL PROTECTION (NDEP) INCLUDING DEVELOPING, SUBMITTING AND IMPLEMENTING A STORM WATER POLLUTION PREVENTION PLAN (SWPPP). THE CONTRACTOR SHALL DEVELOP, PLACE AND MAINTAIN STORM WATER PROTECTION DEVICES IN COMPLIANCE WITH THE NEVADA CONTRACTORS FIELD GUIDE FOR CONSTRUCTION SITE BEST MANAGEMENT PRACTICES (JUNE 2008).
10. THE LOCATION OF EXISTING UTILITIES SHOWN ON THESE DRAWINGS IS BASED ON THE BEST INFORMATION AVAILABLE TO THE ENGINEER. IT SHALL BE THE CONTRACTORS' RESPONSIBILITY TO VERIFY THESE LOCATIONS AT THE PROPOSED POINTS OF CONNECTIONS AND IN AREAS OF POSSIBLE CONFLICT WITH NEW UTILITY INSTALLATION, PRIOR TO BEGINNING CONSTRUCTION. POTHOLING IS REQUIRED. SHOULD THE CONTRACTOR FIND ANY DISCREPANCIES BETWEEN THE CONDITIONS EXISTING IN THE FIELD AND THE INFORMATION SHOWN ON THESE DRAWINGS, HE SHALL NOTIFY THE ENGINEER BEFORE PROCEEDING WITH CONSTRUCTION.
11. THE CONTRACTOR WILL BE SOLELY AND COMPLETELY RESPONSIBLE FOR THE CONDITIONS OF THE JOB SITE, INCLUDING SAFETY OF ALL PERSONS AND PROPERTY DURING PERFORMANCE OF THE WORK. THIS REQUIREMENT WILL APPLY CONTINUOUSLY AND NOT BE LIMITED TO NORMAL WORKING HOURS. THE CONTRACTOR SHALL BE RESPONSIBLE FOR THE DESIGN AND CONSTRUCTION OF PROPER SHORING OF TRENCHES IN ACCORDANCE WITH OCCUPATIONAL SAFETY LAWS. THE DUTIES OF THE ENGINEER DO NOT INCLUDE REVIEW OF THE ADEQUACY OF THE CONTRACTOR'S SAFETY IN, ON, OR NEAR THE CONSTRUCTION SITE.
12. SHOULD IT APPEAR THAT THE WORK TO BE DONE, OR ANY MATTER RELATIVE THERETO, IS NOT SUFFICIENTLY DETAILED OR EXPLAINED ON THESE PLANS, THE CONTRACTOR SHALL CONTACT THE ENGINEER FOR SUCH FURTHER EXPLANATIONS AS MAY BE NECESSARY.

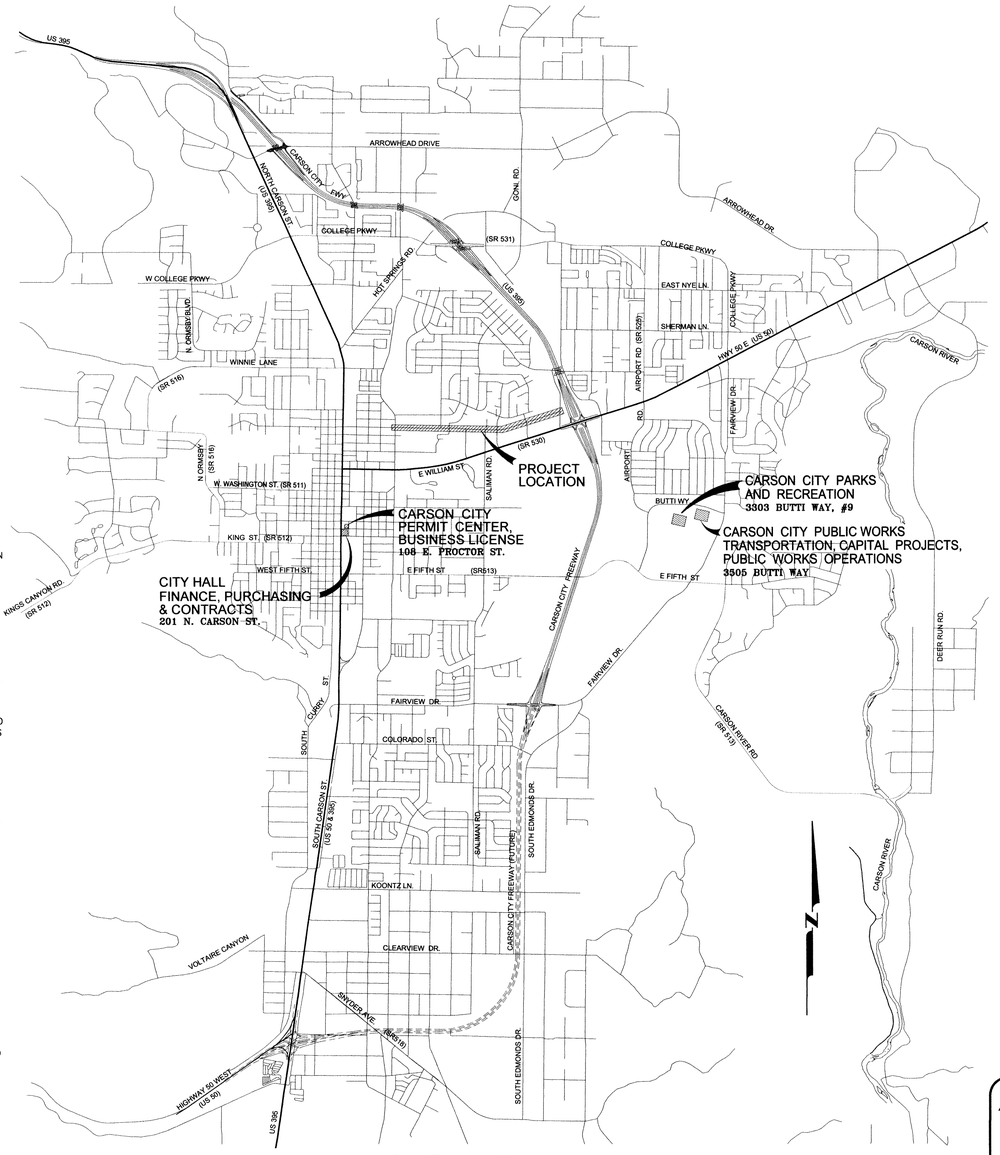

VICINITY MAP

N.T.S.

SHEET INDEX

1	TITLE SHEET
2	INDEX MAP, NOTES, LEGEND & ABBREVIATIONS
3	STORM WATER PROTECTION PLAN
4	PLAN & PROFILE – E. LONG STREET (STA 9+00 TO STA 13+00)
5	PLAN & PROFILE – E. LONG STREET (STA 13+00 TO STA 17+00)
6	PLAN & PROFILE – E. LONG STREET (STA 17+00 TO STA 20+50)
7	PLAN & PROFILE – E. LONG STREET (STA 20+50 TO STA 23+50)
8	CONSTRUCTION DETAILS
9	CONSTRUCTION DETAILS
10	CONSTRUCTION DETAILS
11	STRIPING PLAN – E. LONG STREET (STA 9+00 TO STA 17+00)
12	STRIPING PLAN – E. LONG STREET (STA 17+00 TO STA 23+50)

Call before you Dig
Avoid cutting underground utility lines. It's costly.
Call 811
OR
1-800-227-2600

APPLICATION NO. _____

DESIGNED BY: BD
DRAWN BY: BD
CHECKED BY: RF
DWG NO.: 3.0906BS1.dwg
SCALE (HORIZ): XX
SCALE (VERT): XX
PLOT DATE: 2011.FEB.04

CARSON CITY
PUBLIC WORKS DEPARTMENT
3505 BUTTI WAY CARSON CITY, NEVADA 89701
PH: 887-2355 FAX: 887-2112

REGISTERED PROFESSIONAL ENGINEER
ROBERT D. FELLOWS
Exp: 6/30/11
CIVIL
No. 12497
STATE OF NEVADA
2-7-11

REV.	DATE	DESCRIPTION	BY	APP'D

FOR BIDDING PURPOSES ONLY

EAST LONG STREET CDBG
PEDESTRIAN IMPROVEMENTS
PROJECT No. 3.0906

TITLE SHEET

SHEET 1 OF 12

H:\Projects\3.0906 long st ped imp\dwg\3-0906bs1.dwg, TITLE-1, 2/4/2011 8:20:34 AM, BDyal

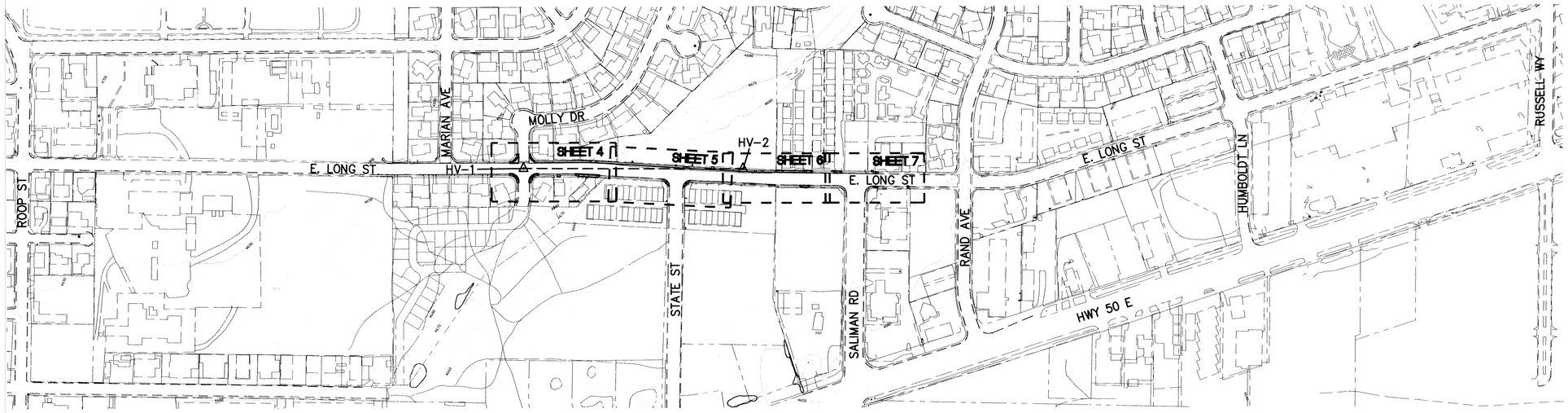

SHEET INDEX MAP

SCALE: 1"=200'

ABBREVIATIONS

AB	AGGREGATE BASE
AC	ASPHALTIC CONCRETE
AGG	AGGREGATE
APN	ASSESSORS PARCEL NUMBER
ARV	AIR RELEASE VALVE
ASSY	ASSEMBLY
ASTM	AMERICAN SOCIETY FOR TESTING MATERIALS
AWWA	AMERICAN WATER WORKS ASSOCIATION
BVC	BEGIN VERTICAL CURVE
CATV	CABLE TV
CB	CATCH BASIN
CI	CAST IRON
CL	CENTER LINE, CLASS
CO	CLEAN OUT
COMP	COMPACT/COMPACTED
CONC	CONCRETE
CONN	CONNECTION
C&G	CURB & GUTTER
DI	DROP INLET/DUCTILE IRON
DTL	DETAIL
DIA, ø	DIAMETER
DWG	DRAWING
EXIST	EXISTING
E	EAST
EA	EACH
ELECT	ELECTRIC/ELECTRICAL
EL, ELEV	ELEVATION
EP	EDGE OF PAVEMENT
EVC	END VERTICAL CURVE
F	FEET
FG	FINISH GRADE
FL	FLOWLINE
G	GAS
GS	GAS SERVICE
GRD	GRADE
GV	GAS VALVE/GATE VALVE
HORIZ	HORIZONTAL
HP	HIGH POINT/HORSEPOWER
HV	HORIZONTAL/VERTICAL
HYD	HYDRANT
I.D.	INSIDE DIAMETER
IE, INV	INVERT ELEVATION
INC	INCLUDED/INCLUDING
INTX	INTERSECTION
IRR, IRRG	IRRIGATION LINE
JCT	JUNCTION
L	LENGTH
LAT	LATERAL
LF	LINEAL FEET
LT	LEFT
MAX	MAXIMUM
MDD	MAXIMUM DRY DENSITY
MH	MANHOLE
MIN	MINIMUM
MMD	MAXIMUM MARSHAL DENSITY
N	NORTH
(N)	NEW
N.I.C.	NOT IN CONTRACT
NTS	NOT TO SCALE
OC	ON CENTER
O.D.	OUTSIDE DIAMETER
OGL	ORIGINAL GROUND LINE
POC	POINT OF CURVATURE
PCC	PORTLAND CEMENT CONCRETE
PE	POLYETHYLENE
PI	POINT OF INTERSECTION
PL	PROPERTY LINE
PSI	POUNDS PER SQUARE INCH
PT	POINT OF TANGENCY
PVC	POLYVINYL CHLORIDE
PVI	POINT OF VERTICAL INTERSECTION
PVMT	PAVEMENT
Q	FLOW (CFS)
R	RADIUS
RCP	REINFORCED CONCRETE PIPE
REQ'D	REQUIRED
ROW	RIGHT OF WAY
RT	RIGHT
S	SLOPE, SOUTH
SCH	SCHEDULE
SD	STORM DRAIN
SDMH	STORM DRAIN MANHOLE
SDR	STANDARD DIMENSION RATIO
SF	SQUARE FEET
SHT	SHEET
SPKR	SPRINKLER
SS	SANITARY SEWER
SSMH	SANITARY SEWER MANHOLE
SSPWC	STANDARD SPECIFICATIONS FOR PUBLIC WORKS CONSTRUCTION
STA	STATION
STD	STANDARD
STL	STEEL
S/W	SIDEWALK
T, TELE	TELEPHONE
T.B.C.	TOP BACK OF CURB
TOC	TOP OF CURB/TOP OF CONCRETE
TOP	TOP OF PIPE
T.O.V.	TOP OF VAULT
TRANS	TRANSFORMER
TYP	TYPICAL
U/G	UNDERGROUND
UGE	UNDERGROUND ELECTRIC
UL	UNDERWRITERS LABORATORIES
UN	UNLESS NOTED
VC	VERTICAL CURVE
VG	VALLEY GUTTER
VERT	VERTICAL
W	WEST, WATER
W/	WITH
W/O	WITHOUT
WS	WATER SERVICE
WV	WATER VALVE

LEGEND

EXISITNG		PROPOSED
—P—	APPROX. PROPERTY LINE	—P—
	CENTER LINE	
	EASEMENT	
	FENCE	
	EDGE OF PAVEMENT	
	CONSTRUCTION NOTE	XX
W	WATER MAIN	
	WATER VALVE	
	FIRE HYDRANT	
	AIR RELEASE VALVE	
18"SS	SEWER PIPE	
S	SEWER MANHOLE	
18"SD	STORMDRAIN PIPE	
D	STORMDRAIN MANHOLE	
61 4644.45 DESC	SURVEY POINT	
	SURVEY CONTROL POINT	
	FLOW LINE/DRAINAGE SWALE	
	CONTOUR ELEVATION	
	SPOT ELEVATION	
PP	POWER POLE	
OHP	OVERHEAD POWER	
	GUY WIRE	

HORIZONTAL & VERTICAL CONTROL POINT DATA

POINT	NORTHING	EASTING	ELEVATION	STATION & OFFSET FROM CONTROL LINE	DESCRIPTION / LOCATION
HV-1	14739059.87	2292978.83	4685.35	10+01.66 (0.43' LT)	COPPERWELD W/ PUNCH AT C/L INTERSECTION OF MOLLY DR & E. LONG ST
HV-2	14739056.59	2293733.46	4656.96	17+55.54 (29.13' LT)	5/8" REBAR & CAP AT NORTH EDGE OF LONG ST 385' WEST OF SALIMAN RD

NOTE:

THE CONTRACTOR SHALL BE HELD RESPONSIBLE TO REPLACE ALL EXISTING PERMANENT SURVEY CONTROL MONUMENTS WHICH ARE DAMAGED OR DISTURBED DUE TO HIS CONSTRUCTION EFFORTS. SURVEY CONTROL MONUMENTS SHALL BE (CLASS A MONUMENTS) INSTALLED PER SSPWC STANDARD DRAWING 1-27. THE RE-ESTABLISHMENT OF SURVEY MONUMENTS SHALL BE COMPLETED BY A NEVADA LICENSED PROFESSIONAL LAND SURVEYOR.

BASIS OF BEARING, COORDINATES AND ELEVATION:

THE BASIS OF BEARING, COORDINATES AND ELEVATION FOR THIS PROJECT IS:
THE LINE BETWEEN "HV-1" (N 14739059.87 E 2292978.83 ELEV=4685.35) – LOCATED AT THE INTERSECTION OF E. LONG ST. AND MOLLY DR. AND "HV-2" (N 14739056.59, E 2293733.46 ELEV=4656.96) – LOCATED AT THE NORTH EDGE OF LONG ST. AT 385' WEST OF THE CENTER LINE OF SALIMAN RD., WITH THE LINE BETWEEN THE TWO POINTS HAVING A BEARING OF S89°45'06"E AND DISTANCE OF 754.64'

COORDINATES ARE NEVADA STATE PLANE, WEST ZONE NAD83.

AERIAL MAPPING AND TOPOGRAPHY PREPARED BY NORTH AMERICAN MAPPING, FLOWN 10-5-04, WITH SUPPLEMENTAL FIELD SURVEY DATA PROVIDED BY TRI-STATE SURVEYING, INC. (2010). ELEVATIONS ARE BASED ON NAVD88 DATUM

Call before you Dig
Avoid cutting underground utility lines. It's costly.
Call 811
OR
1-800-227-2600

DESIGNED BY: BD
DRAWN BY: RF
CHECKED BY: BD
DWG NO.: 3-0906BS1.DWG
SCALE (HORIZ): 1"=200'
SCALE (VERT): X"=XX'
PLOT DATE: 2011 FEB 04

CARSON CITY
PUBLIC WORKS DEPARTMENT
3505 BUTTI WAY CARSON CITY, NEVADA 89701
PH: 887-2355 FAX: 887-2112

PROFESSIONAL ENGINEER, STATE OF NEVADA
ROBERT D. FELLOWS
Exp: 6/30/11
CIVIL
No. 12497
2-7-11

REV.	DATE	DESCRIPTION	BY	APP'D

FOR BIDDING PURPOSES ONLY

EAST LONG STREET CDBG
PEDESTRIAN IMPROVEMENTS
PROJECT No. 3.0906

SHEET INDEX

SHEET 2 OF 12

H:\Projects\3.0906 long st ped imp\dwg\3-0906bs1.dwg, INDX-2, 2/4/2011 8:35:09 AM, BDoyal

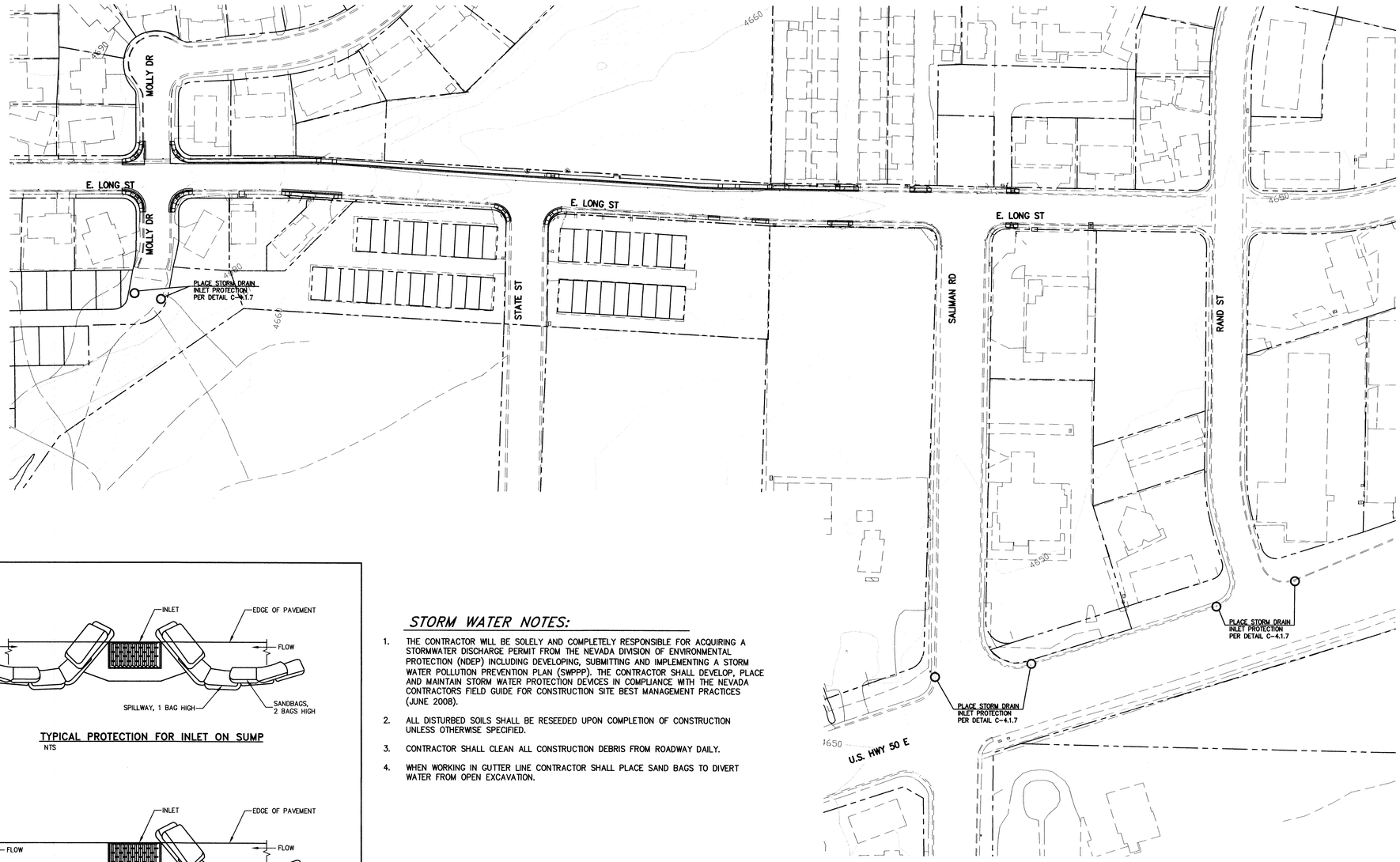

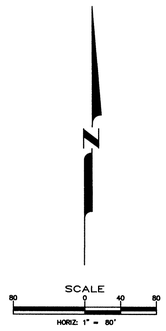

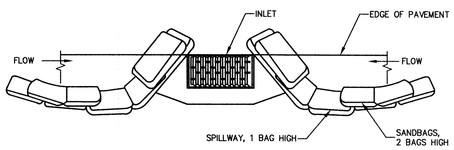

TYPICAL PROTECTION FOR INLET ON SUMP
NTS

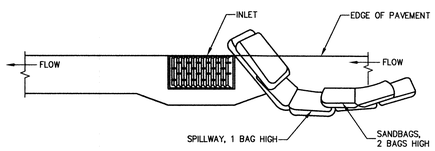

TYPICAL PROTECTION FOR INLET ON GRADE
NTS

NOTES:

1. INTENDED FOR TEMPORARY SHORT-TERM USE.
2. USE TO MANAGE CURB WATER FLOW.
3. SEDIMENT CAPTURED BEHIND SANDBAGS SHALL BE REMOVED WEEKLY DURING CONSTRUCTION.
4. INLET PROTECTION MUST BE PROPERLY MAINTAINED WHILE IN PLACE AND REMOVED WHEN REQUIREMENTS OF NDEP PERMIT HAVE BEEN MET.
5. SANDBAGS SHALL BE FILLED WITH 3/4 INCH WASHED ROCK.

NO.	REVISION	DATE	STANDARD DETAIL FOR PUBLIC WORKS CONSTRUCTION	SECTION CARSON CITY
			STORM DRAIN INLET PROTECTION	DRAWING NO. C-4.1.7
APPROVED BY:		7/09		DATE 7/2009

STORM WATER NOTES:

1. THE CONTRACTOR WILL BE SOLELY AND COMPLETELY RESPONSIBLE FOR ACQUIRING A STORMWATER DISCHARGE PERMIT FROM THE NEVADA DIVISION OF ENVIRONMENTAL PROTECTION (NDEP) INCLUDING DEVELOPING, SUBMITTING AND IMPLEMENTING A STORM WATER POLLUTION PREVENTION PLAN (SWPPP). THE CONTRACTOR SHALL DEVELOP, PLACE AND MAINTAIN STORM WATER PROTECTION DEVICES IN COMPLIANCE WITH THE NEVADA CONTRACTORS FIELD GUIDE FOR CONSTRUCTION SITE BEST MANAGEMENT PRACTICES (JUNE 2008).
2. ALL DISTURBED SOILS SHALL BE RESEEDED UPON COMPLETION OF CONSTRUCTION UNLESS OTHERWISE SPECIFIED.
3. CONTRACTOR SHALL CLEAN ALL CONSTRUCTION DEBRIS FROM ROADWAY DAILY.
4. WHEN WORKING IN GUTTER LINE CONTRACTOR SHALL PLACE SAND BAGS TO DIVERT WATER FROM OPEN EXCAVATION.

Call before you Dig
Avoid cutting underground utility lines. It's costly.
Call 811 OR 1-800-227-2600

DESIGNED BY: BD
DRAWN BY: BD
CHECKED BY: RF
DWG NO.: 3-0906BS1.DWG
SCALE (HORIZ): 1"=80'
SCALE (VERT): N/A
PLOT DATE: 2011 FEB 04

CARSON CITY PUBLIC WORKS DEPARTMENT
3505 BUTTI WAY CARSON CITY, NEVADA 89701
PH: 887-2355 FAX: 887-2112

PROFESSIONAL ENGINEER STATE OF NEVADA
ROBERT D. FELLOWS
Exp: 6/30/11
CIVIL
No. 12497
2-7-11

REV.	DATE	DESCRIPTION	BY	APP'D

FOR BIDDING PURPOSES ONLY

EAST LONG STREET CDBG PEDESTRIAN IMPROVEMENTS
PROJECT No. 3.0906

STORM WATER PROTECTION PLAN

SHEET 3 OF 12

H:\Projects\3.0906 long st ped imp\dwg\3-0906bs1.dwg, SWPP-3, 2/4/2011 8:30:42 AM, BDoyal

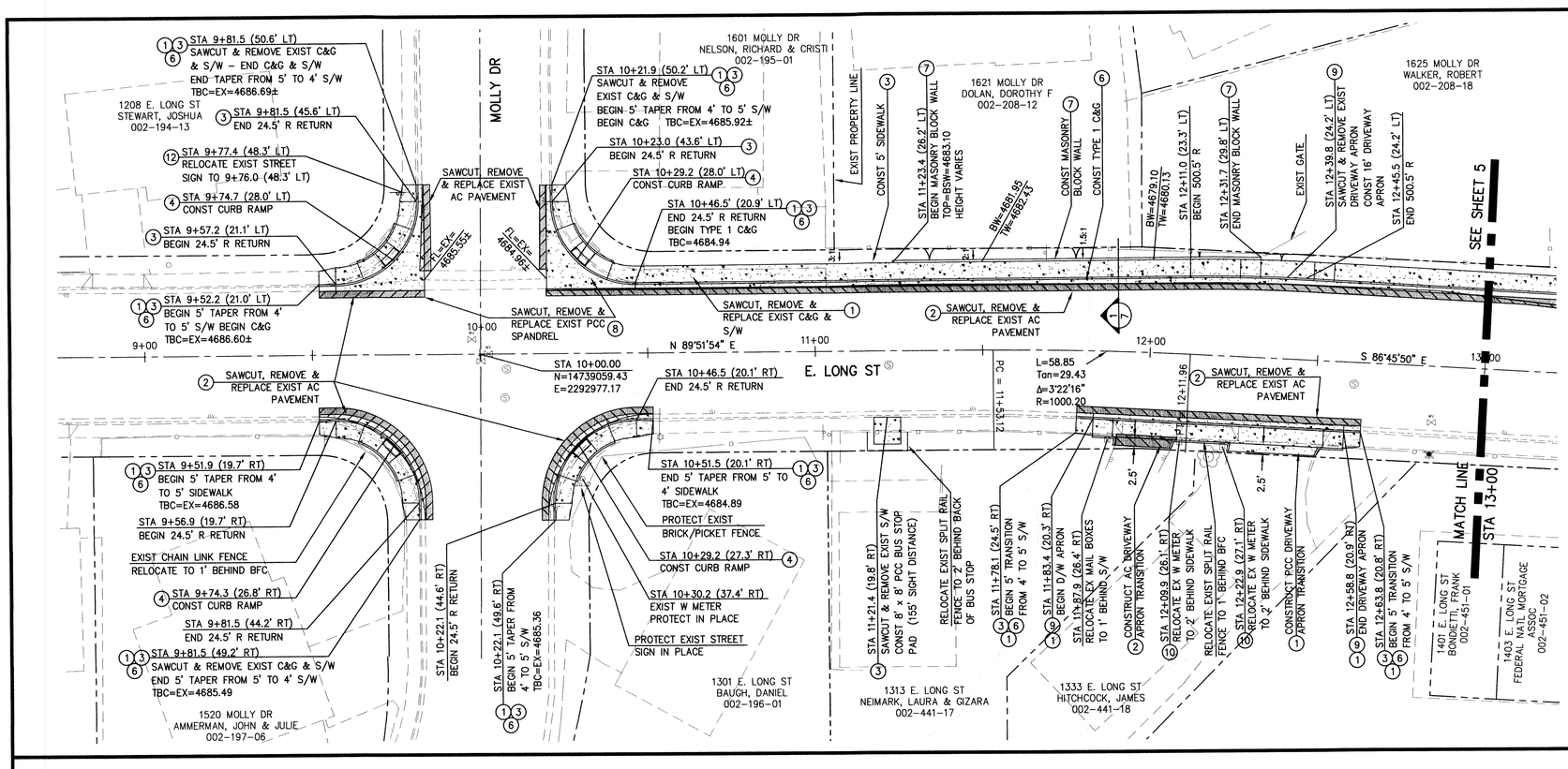

CONSTRUCTION NOTES:

1. SAWCUT & REMOVE EXISTING CONCRETE SIDEWALK, CURB & GUTTER.
2. SAWCUT, REMOVE & REPLACE EXISTING AC PAVEMENT PER DETAIL C-5.1.6.
3. CONSTRUCT TYPE "A" SIDEWALK PER DETAIL C-5.2.2.
4. CONSTRUCT PERPENDICULAR APEX CURB RAMP PER DETAIL C-5.3.3.
5. CONSTRUCT MID BLOCK CURB RAMP PER DETAIL C-5.3.9.
6. CONSTRUCT TYPE 1 CURB & GUTTER PER DETAIL C-5.1.3.
7. CONSTRUCT MASONRY BLOCK WALL PER SECTION 1 SHEET 7.
8. CONSTRUCT VALLEY GUTTER SPANDREL PER DETAIL C-5.1.2.
9. CONSTRUCT TYPE 1 DRIVEWAY APRON PER DETAIL C-5.2.3.
10. RELOCATE EXISTING WATER PIT SETTER PER DETAIL C-3.2.1.
11. ADJUST WATER VALVE BOX TO FINISH GRADE PER DETAIL C-3.1.4.
12. INSTALL STREET SIGN PER DETAIL C-5.4.2.
13. SAWCUT AND REMOVE EXISTING SIDEWALK CROSS DRAIN CONSTRUCT SIDEWALK CROSS DRAIN PER DETAIL C-4.1.8.

NOTE: STATIONING OF CURB & GUTTER, CURB RAMPS AND DRIVEWAY APRONS IS TO THE BACK FACE OF CURB

Call before you Dig
Avoid cutting underground utility lines. It's costly.
Call 811 OR 1-800-227-2600

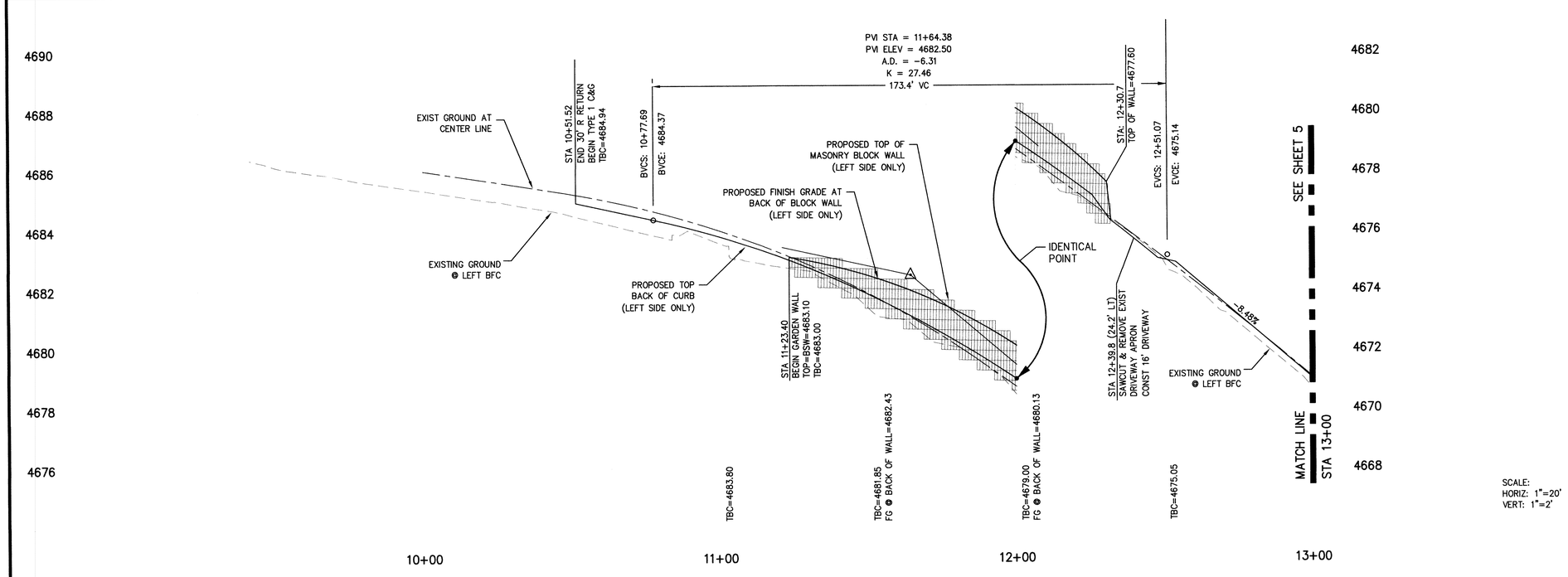

SCALE:
HORIZ: 1"=20'
VERT: 1"=2'

DESIGNED BY: BD
DRAWN BY: BD
CHECKED BY: RF
DWG NO.: 3-0906BS1.DWG
SCALE (HORIZ): 1"=20'
SCALE (VERT): 1"=2'
PLOT DATE: 2011 FEB 04

CARSON CITY
PUBLIC WORKS DEPARTMENT
3505 BUTTI WAY CARSON CITY, NEVADA 89701
PH: 887-2355 FAX: 887-2112

REGISTERED PROFESSIONAL ENGINEER ROBERT D. FELLOWS Exp: 6/30/11 CIVIL No. 12497 STATE OF NEVADA 2-7-11

REV.	DATE	DESCRIPTION	BY	APP'D

FOR BIDDING PURPOSES ONLY

EAST LONG STREET CDBG PEDESTRIAN IMPROVEMENTS
PROJECT No. 3.0906

PLAN & PROFILE
E. LONG STREET
STA 9+00 to STA 13+00

SHEET 4 OF 12

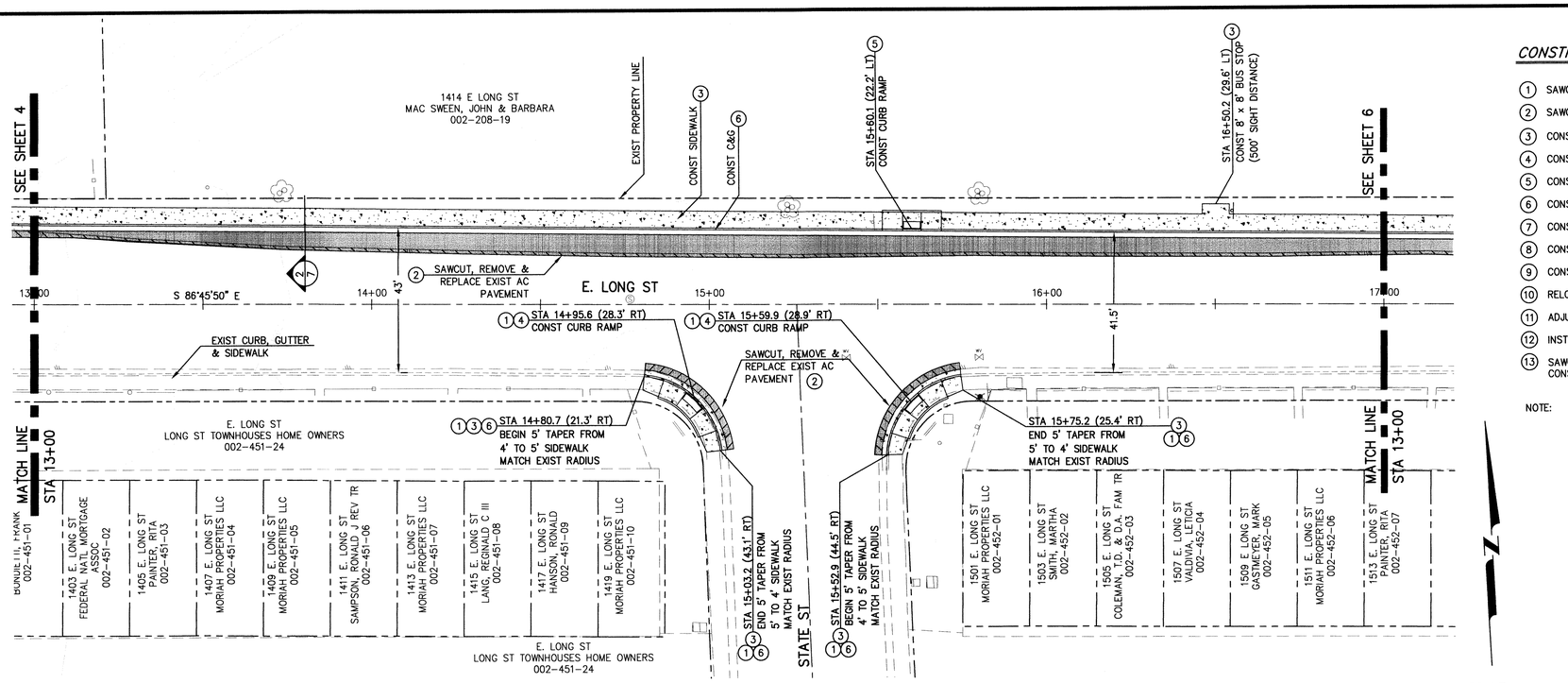

CONSTRUCTION NOTES:

1. SAWCUT & REMOVE EXISTING CONCRETE SIDEWALK, CURB & GUTTER.
2. SAWCUT, REMOVE & REPLACE EXISTING AC PAVEMENT PER DETAIL C-5.1.6.
3. CONSTRUCT TYPE "A" SIDEWALK PER DETAIL C-5.2.2.
4. CONSTRUCT PERPENDICULAR APEX CURB RAMP PER DETAIL C-5.3.3.
5. CONSTRUCT MID BLOCK CURB RAMP PER DETAIL C-5.3.9.
6. CONSTRUCT TYPE 1 CURB & GUTTER PER DETAIL C-5.1.3.
7. CONSTRUCT MASONRY BLOCK WALL PER SECTION 1 SHEET 7.
8. CONSTRUCT VALLEY GUTTER SPANDREL PER DETAIL C-5.1.2.
9. CONSTRUCT TYPE 1 DRIVEWAY APRON PER DETAIL C-5.2.3.
10. RELOCATE EXISTING WATER PIT SETTER PER DETAIL C-3.2.1.
11. ADJUST WATER VALVE BOX TO FINISH GRADE PER DETAIL C-3.1.4.
12. INSTALL STREET SIGN PER DETAIL C-5.4.2.
13. SAWCUT AND REMOVE EXISTING SIDEWALK CROSS DRAIN CONSTRUCT SIDEWALK CROSS DRAIN PER DETAIL C-4.1.8.

NOTE: STATIONING OF CURB & GUTTER, CURB RAMPS AND DRIVEWAY APRONS IS TO THE BACK FACE OF CURB

Call before you Dig
Avoid cutting underground utility lines. It's costly.
call 811 OR 1-800-227-2600

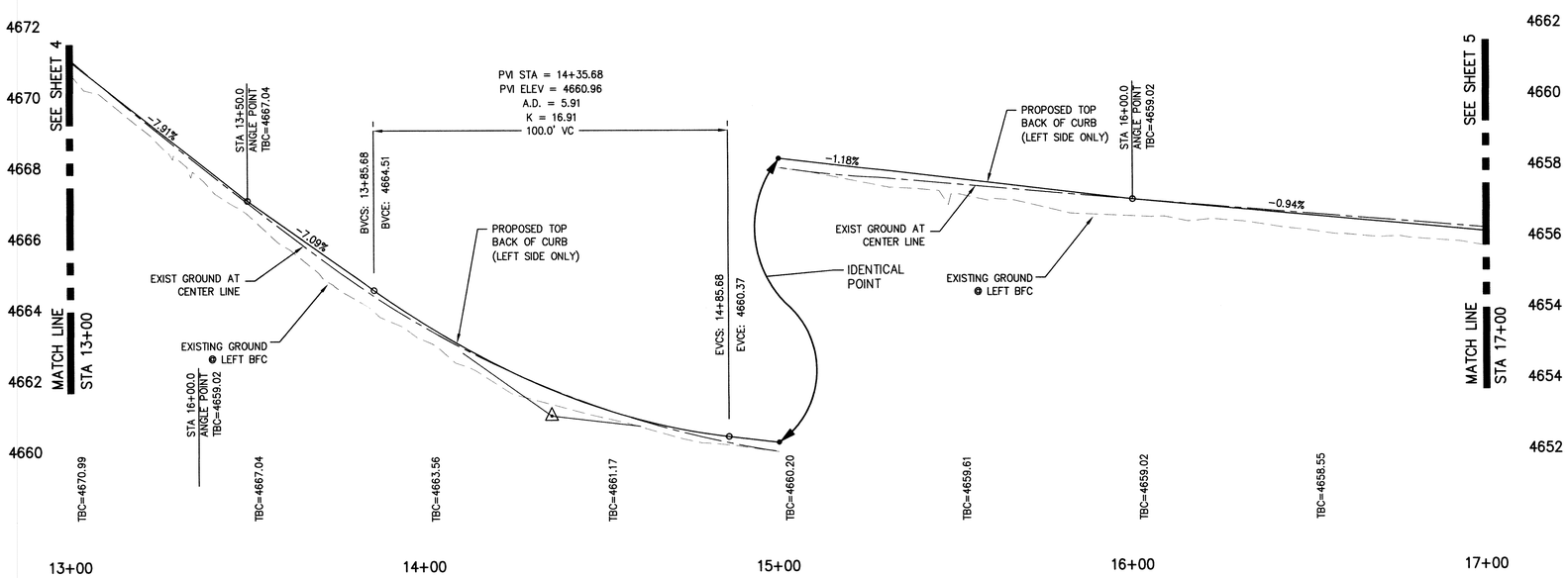

SCALE:
HORIZ: 1"=20'
VERT: 1"=2'

DESIGNED BY: BD
DRAWN BY: BD
CHECKED BY: RF
DWG NO.: 3-0906BS1.DWG
SCALE (HORIZ): 1"=20'
SCALE (VERT): 1"=2'
PLOT DATE: 2011 FEB 04

CARSON CITY
PUBLIC WORKS DEPARTMENT
3505 BUTTI WAY CARSON CITY, NEVADA 89701
PH: 887-2355 FAX: 887-2112

PROFESSIONAL ENGINEER
ROBERT D. FELLOWS
Exp: 6/30/11
CIVIL
No. 12497
STATE OF NEVADA
2-7-11

REV.	DATE	DESCRIPTION	BY	APP'D

FOR BIDDING PURPOSES ONLY

EAST LONG STREET CDBG
PEDESTRIAN IMPROVEMENTS
PROJECT No. 3.0906
PLAN & PROFILE
E. LONG STREET
STA 13+00 to STA 17+00

SHEET 5 OF 12

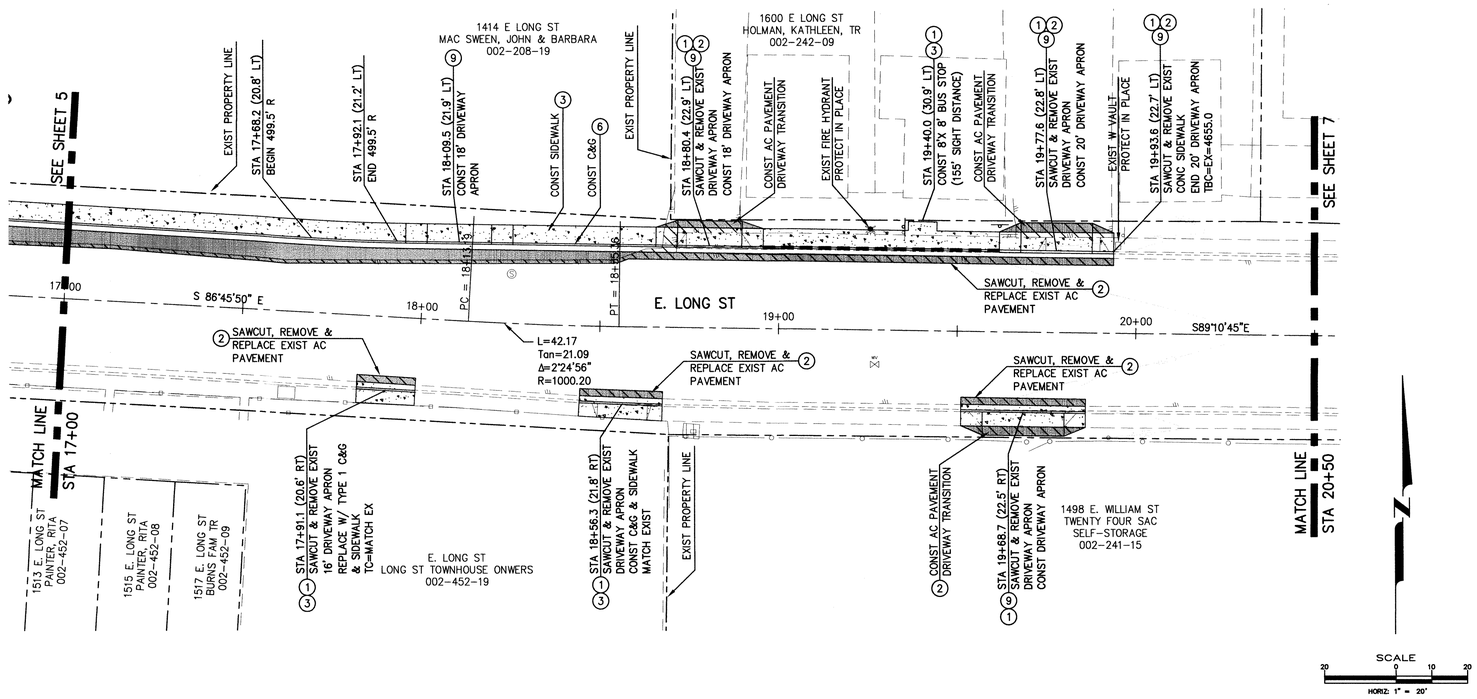

CONSTRUCTION NOTES:

1. SAWCUT & REMOVE EXISTING CONCRETE SIDEWALK, CURB & GUTTER.
2. SAWCUT, REMOVE & REPLACE EXISTING AC PAVEMENT PER DETAIL C-5.1.6.
3. CONSTRUCT TYPE "A" SIDEWALK PER DETAIL C-5.2.2.
4. CONSTRUCT PERPENDICULAR APEX CURB RAMP PER DETAIL C-5.3.3.
5. CONSTRUCT MID BLOCK CURB RAMP PER DETAIL C-5.3.9.
6. CONSTRUCT TYPE 1 CURB & GUTTER PER DETAIL C-5.1.3.
7. CONSTRUCT MASONRY BLOCK WALL PER SECTION 1 SHEET 7.
8. CONSTRUCT VALLEY GUTTER SPANDREL PER DETAIL C-5.1.2.
9. CONSTRUCT TYPE 1 DRIVEWAY APRON PER DETAIL C-5.2.3.
10. RELOCATE EXISTING WATER PIT SETTER PER DETAIL C-3.2.1.
11. ADJUST WATER VALVE BOX TO FINISH GRADE PER DETAIL C-3.1.4.
12. INSTALL STREET SIGN PER DETAIL C-5.4.2.
13. SAWCUT AND REMOVE EXISTING SIDEWALK CROSS DRAIN CONSTRUCT SIDEWALK CROSS DRAIN PER DETAIL C-4.1.8.

NOTE: STATIONING OF CURB & GUTTER, CURB RAMPS AND DRIVEWAY APRONS IS TO THE BACK FACE OF CURB

Call before you Dig
Avoid cutting underground utility lines. It's costly.
Call 811 OR 1-800-227-2600

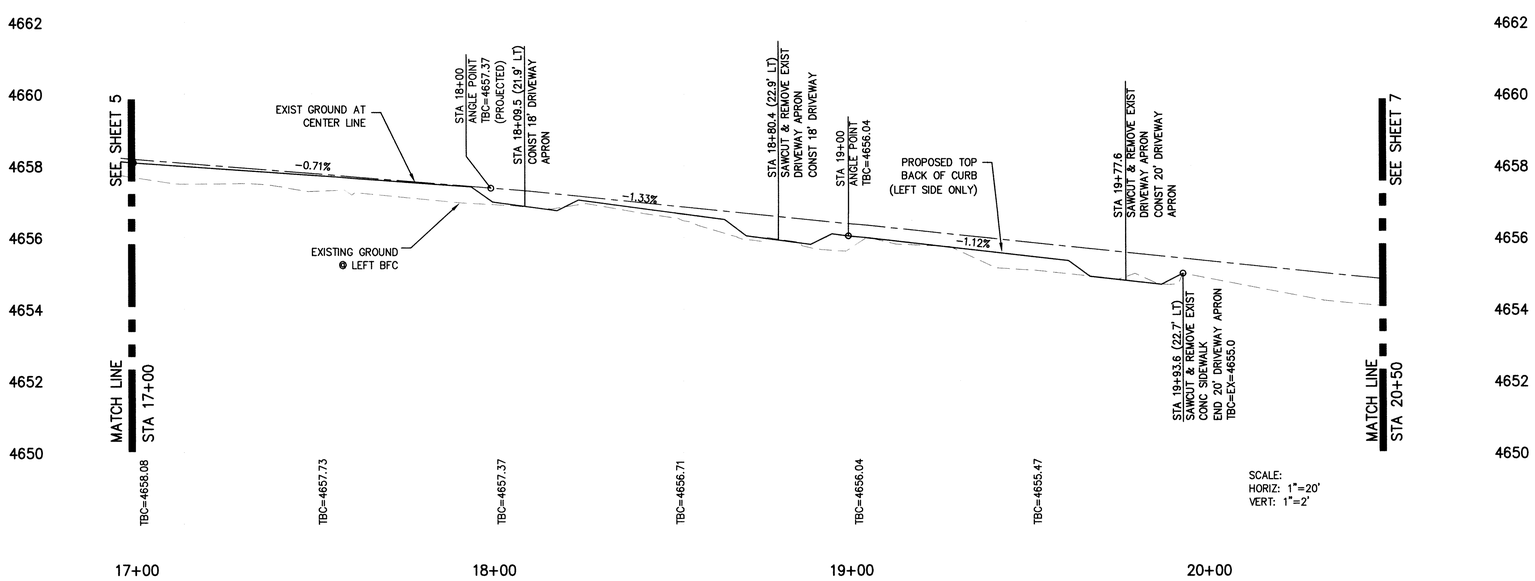

DESIGNED BY: BD
DRAWN BY: BD
CHECKED BY: RF
DWG NO.: 3.0906BS1.DWG
SCALE (HORIZ): 1"=20'
SCALE (VERT): 1"=2'
PLOT DATE: 2011 FEB 04

CARSON CITY
PUBLIC WORKS DEPARTMENT
3505 BUTTI WAY CARSON CITY, NEVADA 89701
PH: 887-2355 FAX: 887-2112

REGISTERED PROFESSIONAL ENGINEER STATE OF NEVADA
ROBERT D. FELLOWS
Exp: 6/30/11
CIVIL
No. 12497
2-7-11

REV.	DATE	DESCRIPTION	BY	APP'D

FOR BIDDING PURPOSES ONLY

EAST LONG STREET CDBG PEDESTRIAN IMPROVEMENTS

PROJECT No. 3.0906

PLAN & PROFILE
E. LONG STREET
STA 17+00 to STA 20+50

SHEET 6 OF 12

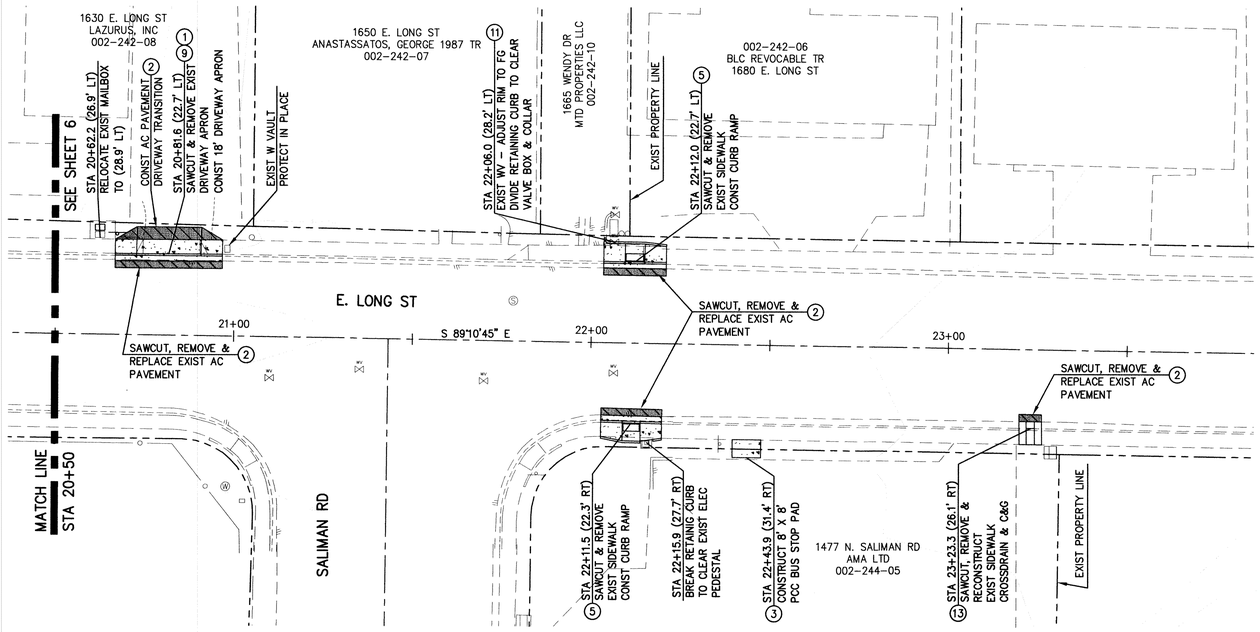

CONSTRUCTION NOTES:

1. SAWCUT & REMOVE EXISTING CONCRETE SIDEWALK, CURB & GUTTER.
2. SAWCUT, REMOVE & REPLACE EXISTING AC PAVEMENT PER DETAIL C-5.1.6.
3. CONSTRUCT TYPE "A" SIDEWALK PER DETAIL C-5.2.2.
4. CONSTRUCT PERPENDICULAR APEX CURB RAMP PER DETAIL C-5.3.3.
5. CONSTRUCT MID BLOCK CURB RAMP PER DETAIL C-5.3.9.
6. CONSTRUCT TYPE 1 CURB & GUTTER PER DETAIL C-5.1.3.
7. CONSTRUCT MASONRY BLOCK WALL PER SECTION 1 SHEET 7.
8. CONSTRUCT VALLEY GUTTER SPANDREL PER DETAIL C-5.1.2.
9. CONSTRUCT TYPE 1 DRIVEWAY APRON PER DETAIL C-5.2.3.
10. RELOCATE EXISTING WATER PIT SETTER PER DETAIL C-3.2.1.
11. ADJUST WATER VALVE BOX TO FINISH GRADE PER DETAIL C-3.1.4.
12. INSTALL STREET SIGN PER DETAIL C-5.4.2.
13. SAWCUT AND REMOVE EXISTING SIDEWALK CROSS DRAIN CONSTRUCT SIDEWALK CROSS DRAIN PER DETAIL C-4.1.8.

NOTE: STATIONING OF CURB & GUTTER, CURB RAMPS AND DRIVEWAY APRONS IS TO THE BACK FACE OF CURB

Call before you Dig
Avoid cutting underground utility lines. It's costly.
Call 811
OR
1-800-227-2600

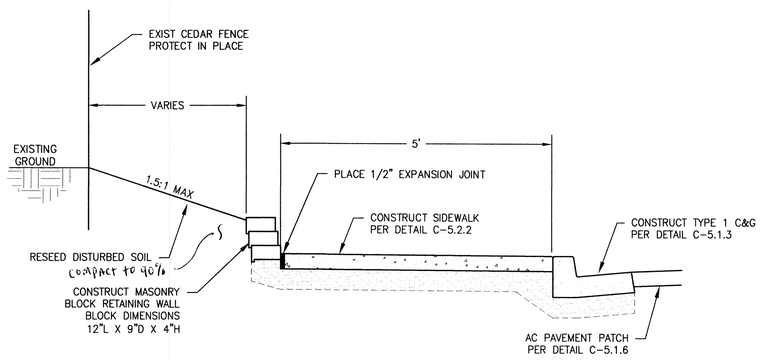

NOTES:

1. BOTTOM ROW OF BRICKS SHALL BE PLACED WITH THE BOTTOM FACE OF BRICK AT A MINIMUM OF 2 INCHES BELOW TOP BACK OF SIDEWALK.
2. BRICKS SHALL BE SECURED TO ADJACENT ROWS USING LANDSCAPE BLOCK ADHESIVE PER MANUFACTURERS DIRECTION. ADHESIVE TO BE APPROVED BY PROJECT MANAGER PRIOR TO INSTALLATION.
3. DISTURBED SOILS SHALL BE RAKED AND SEEDED UPON COMPLETION OF ADJACENT CONSTRUCTION.

SECTION (STA 11+90) 1/7
NOT TO SCALE

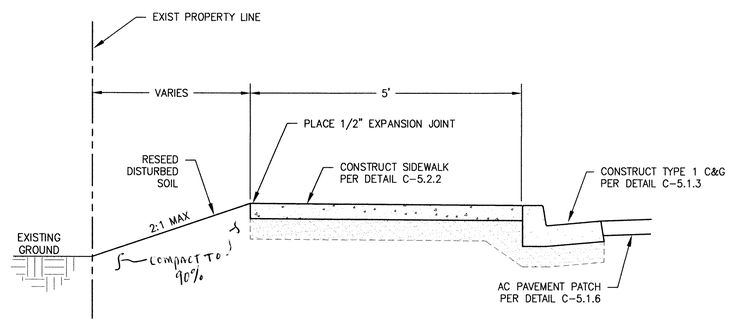

NOTES:

1. DISTURBED SOILS SHALL BE RAKED AND SEEDED UPON COMPLETION OF ADJACENT CONSTRUCTION.

SECTION (STA 13+80) 2/7
NOT TO SCALE

DESIGNED BY: BD
DRAWN BY: BD
CHECKED BY: RF
DWG NO.: 3-0906BS1.DWG
SCALE (HORIZ): 1"=20'
SCALE (VERT): X"=XX'
PLOT DATE: 2011 FEB 04

CARSON CITY
PUBLIC WORKS DEPARTMENT
3505 BUTTI WAY CARSON CITY, NEVADA 89701
PH: 887-2355 FAX: 887-2112

ROBERT D. FELLOWS
Exp: 6/30/11
CIVIL
No. 12497
STATE OF NEVADA
PROFESSIONAL ENGINEER
2-7-11

REV.	DATE	DESCRIPTION	BY	APP'D

FOR BIDDING PURPOSES ONLY

EAST LONG STREET CDBG PEDESTRIAN IMPROVEMENTS
PROJECT No. 3.0906

PLAN & PROFILE
E. LONG STREET
STA 20+50 to STA 23+50

SHEET 7 OF 12

H:\Projects\3.0906 long st ped imp\dwg\3-0906bs1.dwg, LONG 20+50-7, 2/4/2011 2:22:31 PM, BDyal

1. ALL WORK SHALL CONFORM TO THE "STANDARD SPECIFICATIONS FOR PUBLIC WORKS CONSTRUCTION" (SSPWC) AND THE "STANDARD DETAILS FOR PUBLIC WORKS CONSTRUCTION" (SDPWC) AS ADOPTED BY CARSON CITY. THE CONTRACTOR SHALL OBTAIN A PERMIT FOR PUBLIC WORKS CONSTRUCTION FROM THE CARSON CITY PERMIT CENTER PRIOR TO THE START OF CONSTRUCTION.
2. ALL TRAFFIC CONTROL AND BARRICADING WITHIN THE CARSON CITY RIGHT-OF-WAY SHALL CONFORM TO SECTION 100.33, 332.04 AND 332.05 OF THE STANDARD SPECIFICATIONS, PART VI OF THE MANUAL ON UNIFORM TRAFFIC CONTROL DEVICES, LATEST EDITION, AND THE UNR T2 CENTER, TEMPORARY TRAFFIC CONTROL GUIDELINES LATEST EDITION. A TRAFFIC CONTROL PLAN MUST BE SUBMITTED AND APPROVED BY THE CARSON CITY ENGINEERING DIVISION PRIOR TO ANY STREET CLOSURES.
3. THE CONTRACTOR SHALL CALL UNDERGROUND SERVICE ALERT "CALL BEFORE YOU DIG" (811) OR (1-800-227-2600) AT LEAST TWO (2) WORKING DAYS PRIOR TO START OF CONSTRUCTION AND COMPLY WITH THE REQUIREMENTS OF NRS AND NAC 455 THROUGHOUT THE COURSE OF THE WORK. SEWER SERVICE LATERALS ARE NOT OWNED OR MARKED BY CARSON CITY.
4. THE CONTRACTOR SHALL CALL THE CARSON CITY ENGINEERING DIVISION (887-2300) TWO (2) WORKING DAYS PRIOR TO THE START OF CONSTRUCTION. THE CONTRACTOR SHALL CALL ONE (1) WORKING DAY PRIOR TO REQUIRED INSPECTIONS AND TESTING. THE REQUIRED INSPECTIONS AND TESTING ARE LISTED ON THE INSPECTION RECORD ISSUED WITH EACH PERMIT. THE CONTRACTOR MUST HAVE THE PERMIT NUMBER AND THE DESCRIPTION LISTED ON THE INSPECTION RECORD TO SCHEDULE REQUIRED INSPECTIONS AND TESTING. FOR CITY CONTRACTED PROJECTS, THE CONTRACTOR SHALL SCHEDULE INSPECTIONS PER THE CONTRACT DOCUMENTS.
5. FINAL INSPECTIONS WILL BE PERFORMED BY CARSON CITY ENGINEERING DIVISION ACCORDING TO THE CARSON CITY INSPECTIONS AND TESTING PROCEDURES. NOTE: THESE PROCEDURES REQUIRE SUBMITTAL OF RECORD DRAWING PRINTS BY THE CONTRACTOR AND 10 WORKING DAYS TO PREPARE A FINAL PUNCH LIST. ALL CONDITIONS OF THE FINAL INSPECTION MUST BE COMPLETED PRIOR TO FINAL ACCEPTANCE OR ANY APPROVAL OF A CERTIFICATE OF OCCUPANCY BY THE CARSON CITY ENGINEERING DIVISION.
6. MODIFICATIONS TO THE APPROVED PLANS REQUIRES REVIEW AND APPROVAL BY THE CARSON CITY ENGINEERING DIVISION. WORK PERFORMED WITHOUT WRITTEN APPROVAL BY CARSON CITY ENGINEERING WILL REQUIRE REMOVAL AT THE CONTRACTORS EXPENSE.
7. THE APPROVED PLAN, PERMIT AND INSPECTION RECORD MUST BE ON THE JOB SITE AT ALL TIMES.
8. PLAN APPROVAL FOR SEWER AND WATER CONSTRUCTION SHALL EXPIRE ONE YEAR FROM DATE OF APPROVAL UNLESS CONSTRUCTION HAS BEEN INITIATED. (CCMC 12.06.180F, 12.01.140D)
9. THE CONTRACTOR WILL BE SOLELY AND COMPLETELY RESPONSIBLE FOR ACQUIRING A STORMWATER DISCHARGE PERMIT FROM THE NEVADA DIVISION OF ENVIRONMENTAL PROTECTION (NDEP) INCLUDING DEVELOPING, SUBMITTING AND IMPLEMENTING A STORM WATER POLLUTION PREVENTION PLAN (SWPPP). THE CONTRACTOR SHALL DEVELOP, PLACE AND MAINTAIN STORM WATER PROTECTION DEVICES IN COMPLIANCE WITH THE NEVADA CONTRACTORS FIELD GUIDE FOR CONSTRUCTION SITE BEST MANAGEMENT PRACTICES (JUNE 2008).

NO.	REVISION	DATE	STANDARD DETAIL FOR PUBLIC WORKS CONSTRUCTION	SECTION CARSON CITY
			GENERAL NOTES	DRAWING NO. C-1.1.1
APPROVED BY:		7/09		DATE 7/2009

1. NO CONCRETE SHALL BE PLACED UNTIL FORMS AND SUBGRADE ARE INSPECTED BY CARSON CITY ENGINEERING DIVISION.
2. PORTLAND CEMENT CONCRETE (P.C.C.) SHALL HAVE THE FOLLOWING CHARACTERISTICS: SYNTHETIC FIBER-REINFORCEMENT (AT A MINIMUM OF 1 POUND PER CUBIC YARD), 4000 PSI MIN COMPRESSIVE STRENGTH @ 28 DAYS, MIN 6 SACKS OF CEMENT PER CUBIC YARDS WITH A MAX. WATER/CEMENT RATIO OF 0.45, AIR ENTRAINMENT 6% ±1.5%, SLUMP AT 1 TO 4 INCHES ALL MATERIALS SHALL CONFORM TO SSPWC SECTION 202. OF THE STANDARD SPECIFICATIONS FOR PUBLIC WORKS CONSTRUCTION.
3. ALL CONCRETE EDGING AND JOINTING SHALL BE CONSTRUCTED IN ACCORDANCE WITH STD. DETAIL C-5.1.1 AND CONFORM TO SEC. 312.09 OF THE STANDARD SPECIFICATIONS FOR PUBLIC WORKS CONSTRUCTION (SSPWC).
4. IF OBSTRUCTIONS SUCH AS INLETS, UTILITY POLES, FIRE HYDRANTS, ETC. ARE ENCOUNTERED, THE LOCATION AND DIMENSIONS MAY BE ADJUSTED UPON APPROVAL BY CARSON CITY ENGINEER OR PUBLIC WORKS DIRECTOR. A MINIMUM LANDING OF 5 FEET X 5 FEET CLEAR IS REQUIRED WHEN DIRECTION OF TRAVEL MAY CHANGE. A MINIMUM OF 4 FEET CLEAR IS MAY BE USED UPON APPROVAL OF THE CARSON CITY ENGINEER OR PUBLIC WORKS DIRECTOR WHERE DIRECTION OF TRAVEL IS NOT EXPECTED TO CHANGE.
5. WHEN A CROSSWALK IS SERVICED BY RAMP, LANDINGS SHALL BE CONTAINED WITHIN THE CROSSWALK AREA.
6. EXISTING CONCRETE SHALL BE REMOVED TO A NEAT SAWCUT LINE OR NEAREST EXPANSION JOINT.
7. PLANTMIX BITUMINOUS SURFACE SHALL BE FLUSH WITH THE EDGE OF THE GUTTER PAN IN THE AREA OF THE CURB RAMP. GUTTER SHALL MAINTAIN POSITIVE DRAINAGE TO PREVENT PONDING.
8. ALL AGGREGATE BASE SHALL BE TYPE 2, CLASS B AND SHALL CONFORM TO SEC.200.01. OF THE STANDARD SPECIFICATIONS FOR PUBLIC WORKS CONSTRUCTION (SSPWC).
9. NEW CONCRETE SHALL HAVE A HEAVY BROOM FINISH PERPENDICULAR TO SIDEWALK.
10. DETECTABLE WARNINGS SHALL BE EAST JORDAN IRON WORKS 7005 SERIES CAST IRON DETECTABLE WARNING PLATES OR APPROVED EQUAL. INSTALLED PER MANUFACTURERS INSTALLATION GUIDELINES AND CONFORM TO ADAAG (4.29) "DETECTABLE WARNINGS". COLOR: ASPHALT DIPPED UNLESS OTHERWISE APPROVED BY CARSON CITY ENGINEER OR PUBLIC WORKS DIRECTOR. RADIAL DETECTABLE WARNINGS SHALL BE USED WHEN REQUIRED TO MAINTAIN MINIMUM CLEARANCE OF 3 INCHES AND MAXIMUM CLEARANCE OF 8 INCHES FROM DETECTABLE WARNINGS TO BACK FACE OF CURB. RADIAL DETECTABLE WARNINGS SHALL HAVE A RADIUS WITHIN 5 FEET OF BACK FACE OF CURB RADIUS.

NO.	REVISION	DATE	STANDARD DETAIL FOR PUBLIC WORKS CONSTRUCTION	SECTION CARSON CITY
			CURB RAMP GENERAL NOTES	DRAWING NO. C-5.3.1
APPROVED BY:		7/09		DATE 7/2009

1. NO CONCRETE SHALL BE PLACED UNTIL FORMS AND SUBGRADE ARE INSPECTED AND APPROVED BY CARSON CITY PUBLIC WORKS.
2. PORTLAND CEMENT CONCRETE (P.C.C.) SHALL HAVE THE FOLLOWING CHARACTERISTICS: SYNTHETIC FIBER-REINFORCEMENT (AT A MINIMUM OF 1 POUND PER CUBIC YARD), WITH COARSE AGGREGATE GRADATION CONFORMING TO SIZE No. 67 PER SECTION 200.05.03 OF THE STANDARD SPECIFICATIONS, AND SHALL HAVE A 1 TO 4 INCH SLUMP, AND 4 TO 7 PERCENT ENTRAINED AIR. 4000 PSI MIN COMPRESSIVE STRENGTH @ 28 DAYS, MIN 6 SACKS OF TYPE II CEMENT PER CUBIC YARD WITH A MAX. WATER/CEMENT RATIO OF 0.45, AIR ENTRAINMENT 6% ±1.5%, SLUMP AT 1 TO 4 INCHES ALL MATERIALS SHALL CONFORM TO SSPWC SECTION 202. OF THE STANDARD SPECIFICATIONS FOR PUBLIC WORKS CONSTRUCTION.
3. ALL CONCRETE EDGING AND JOINTING SHALL BE CONSTRUCTED IN ACCORDANCE WITH STD. DETAIL C-5.1.1 AND CONFORM TO SEC. 312.09 OF THE STANDARD SPECIFICATIONS FOR PUBLIC WORKS CONSTRUCTION (SSPWC).
4. IF OBSTRUCTIONS SUCH AS INLETS, UTILITY POLES, FIRE HYDRANTS, ETC. ARE ENCOUNTERED, THE LOCATION AND DIMENSIONS MAY BE ADJUSTED UPON APPROVAL BY CARSON CITY PUBLIC WORKS. A MINIMUM SURFACE OF 5 FEET X 5 FEET CLEAR IS REQUIRED WHEN DIRECTION OF TRAVEL MAY CHANGE AND A MINIMUM SURFACE OF 4 FEET CLEAR IS REQUIRED WHERE DIRECTION OF TRAVEL IS NOT EXPECTED TO CHANGE, UNLESS OTHERWISE APPROVED BY THE CARSON CITY ENGINEER OR PUBLIC WORKS DIRECTOR.
5. EXISTING CONCRETE SHALL BE REMOVED TO A NEAT SAWCUT LINE OR NEAREST EXPANSION JOINT.
6. ALL AGGREGATE BASE SHALL BE TYPE 2, CLASS B AND SHALL CONFORM TO SEC.200.01. OF THE STANDARD SPECIFICATIONS FOR PUBLIC WORKS CONSTRUCTION (SSPWC).
7. NEW CONCRETE SHALL HAVE A HEAVY BROOM FINISH PERPENDICULAR TO SIDEWALK.

NO.	REVISION	DATE	STANDARD DETAIL FOR PUBLIC WORKS CONSTRUCTION	SECTION CARSON CITY
			SIDEWALK AND DRIVEWAY GENERAL NOTES	DRAWING NO. C-5.2.1
APPROVED BY:		7/09		DATE 7/2009

1. WATER MAIN SHUTDOWNS/INTERRUPTION OF WATER/FIRE SERVICE; OBTAIN TENTATIVE APPROVAL FROM CARSON CITY WATER UTILITY PRIOR TO PLANNING A SHUTDOWN. APPROVAL IS REQUIRED ONE WORKING DAY PRIOR TO NOTIFICATION OF CUSTOMERS. COMMERCIAL CUSTOMERS SHALL RECEIVE 2 WORKING DAYS WRITTEN AND VERBAL NOTICE OF A SHUTDOWN. SPECIAL ARRANGEMENTS INCLUDING NIGHT TIME SHUTDOWNS MAY BE REQUIRED OF THE CONTRACTOR TO ACCOMMODATE CUSTOMER OPERATIONS. RESIDENTIAL CUSTOMERS SHALL RECEIVE 24 HOURS WRITTEN NOTICE. WHEN WORK IS PERFORMED BY CITY STAFF, THE CITY IS RESPONSIBLE FOR THE NOTIFICATION. THE CONTRACTOR IS RESPONSIBLE IN ALL OTHER CASES. A LIST SHALL BE KEPT BY THE RESPONSIBLE PARTY LISTING THE DATE, TIME AND ADDRESS OF ALL PERSONS NOTIFIED. THE PERSON NOTIFIED SHALL BE INCLUDED ON THE LIST FOR ALL COMMERCIAL CUSTOMERS. CONTACT CARSON CITY WATER UTILITY FOR PHONE NUMBERS WHEN COMMERCIAL CUSTOMERS CANNOT BE LOCATED. THE CONTRACTOR WILL BE SUBJECT TO DAMAGE CLAIMS SHOULD THEY FAIL TO NOTIFY CUSTOMERS OR MAINTAIN DOCUMENTATION OF NOTIFICATION OF CUSTOMERS. THE TOTAL TIME OF ANY WATER SERVICE INTERRUPTION IS LIMITED TO 4 HOURS MAXIMUM. THE CONTRACTOR SHALL NOT OPERATE ANY EXISTING WATER VALVES. WATER MAIN SHUTDOWNS WILL ONLY BE SCHEDULED FOR TUESDAYS, WEDNESDAYS, OR THURSDAYS, EXCLUDING THE WORKING DAYS BEFORE AND AFTER A HOLIDAY. CONTRACTOR SHALL MAKE A WRITTEN REQUEST, TO THE WATER OPERATIONS CHIEF, A MINIMUM OF 10 CALENDAR DAYS IN ADVANCE OF ANY PLANNED SHUTDOWN.
2. WATER MAINS (6 INCH THRU 12 INCH) SHALL BE PVC C900, DR 18 (MINIMUM WALL THICKNESS) UNLESS HIGHER PRESSURE IS SPECIFIED ON THE PLANS. WATER SERVICES 2 INCHES OR LESS SHALL BE CTS, PE TUBING MINIMUM 200 PSI; WATER SERVICES 3 INCHES OR GREATER SHALL BE 4 INCH MINIMUM DIAMETER PVC C900, DR 18 OR AS SPECIFIED ON THE PLANS.
3. MAINTAIN 18 INCHES VERTICAL AND 5 FEET HORIZONTAL SEPARATION BETWEEN ALL UNDERGROUND UTILITY LINES AND WATER LINES. IF WATER LINE IS BELOW POWER LINE OR IS WITHIN 18 INCH VERTICAL SEPARATION OF POWER LINE, POWER/TELEPHONE LINE SHALL BE ENCASED WITH 4 INCHES MINIMUM OF CONCRETE EXTENDING 5 FEET EACH SIDE OF CROSSING. (SEE NV ENERGY SPECS.) CONCRETE ENCASEMENT OF WATER LINES IS NOT ALLOWED.
4. ALL HOT TAPS, GREATER THAN 2 INCHES AND LESS THAN 14 INCHES, ARE TO BE PERFORMED BY CARSON CITY WATER UTILITY. THE CONTRACTOR SHALL CONTACT THE WATER OPERATIONS CHIEF AT LEAST 2 WORKING DAYS PRIOR TO SCHEDULING HOT TAP DATE AND TIME (HOT TAPS ARE PERFORMED TUESDAY THRU THURSDAY EXCLUDING THE WORKING DAYS BEFORE AND AFTER A HOLIDAY). PRIOR TO HOT TAPPING, THE SADDLE SHALL BE HYDROSTATICALLY PRESSURE TESTED TO 150 PSI MINIMUM OR THE DESIGN OF PIPE SYSTEM FOR A MINIMUM OF 5 MINUTES. THE TEST SHALL BE PERFORMED IN THE PRESENCE OF THE WATER UTILITY PERSONNEL PRIOR TO PERFORMING THE TAP.
5. WATER VALVE MARKERS SHALL BE BLUE CARSONITE UTILITY MARKER (CUM-375), 5 FEET-2 INCHES (5'-2") WITH CARSON CITY WATER VALVE DECAL (CWV-116) OR APPROVED EQUAL. PLACE MARKER NO MORE THAN 5 FEET FROM THE VALVE OR AS DIRECTED BY THE CARSON CITY INSPECTOR.
6. REDUCED PRESSURE PRINCIPLE AND DOUBLE CHECK VALVE BACKFLOW ASSEMBLIES SHALL BE APPROVED BY THE CARSON CITY INSPECTOR, AND TESTED BY A CERTIFIED BACKFLOW ASSEMBLY TESTER, AND TEST RESULTS SHALL BE APPROVED BY CARSON CITY WATER UTILITY. FOR NEW WATER METER SETS, THE REQUIRED BACKFLOW PREVENTION ASSEMBLY SHALL BE INSTALLED, INSPECTED, APPROVED AND CERTIFIED TEST RESULTS PROVIDED TO THE CARSON CITY INSPECTOR WITHIN 5 DAYS OF METER SET, UNLESS THE CARSON CITY ENGINEER OR PUBLIC WORKS DIRECTOR APPROVES OTHERWISE. THE SERVICE WILL BE LOCKED OFF IF INSPECTIONS AND CERTIFICATIONS ARE NOT COMPLETED AS SPECIFIED ABOVE. A 25 DOLLAR FEE WILL BE ASSESSED AT TIME OF TURN-ON WHEN LOCK IS REMOVED DURING NORMAL WORKING HOURS. THE FEE WILL BE ASSESSED ON THE BUILDING PERMIT FOR THE INSTALLATION OF THE BACKFLOW DEVICE.
7. ALL WATER MAIN, WATER/FIRE SERVICE, AND BACKFLOW PREVENTION INSPECTIONS AND TESTING MUST BE APPROVED PRIOR TO APPROVAL OF ANY CERTIFICATE OF OCCUPANCY.
8. DISINFECTION TABLETS SHALL BE PLACED USING TITEBOND MULTI-PURPOSE CLEAR 100% SILICONE OR APPROVED EQUAL FOOD GRADE SILICONE

NO.	REVISION	DATE	STANDARD DETAIL FOR PUBLIC WORKS CONSTRUCTION	SECTION CARSON CITY
			WATER GENERAL NOTES	DRAWING NO. C-3.1.1 (307)
APPROVED BY:		07/09		DATE 7/2009

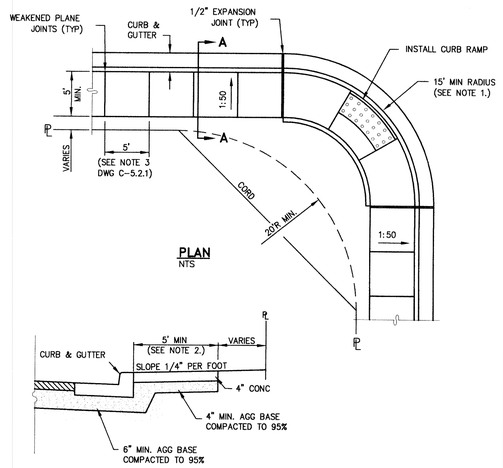

NOTES:

1. MINIMUM CURB RETURN RADIUS SHALL BE 15 FEET UNLESS OTHERWISE APPROVED BY THE CARSON CITY ENGINEER OR PUBLIC WORKS DIRECTOR.
2. SOME STREETS MAY REQUIRE WIDER SIDEWALKS.

NO.	REVISION	DATE	STANDARD DETAIL FOR PUBLIC WORKS CONSTRUCTION	SECTION CARSON CITY
			TYPE "A" SIDEWALK	DRAWING NO. C-5.2.2
APPROVED BY:		7/09		DATE 7/2009

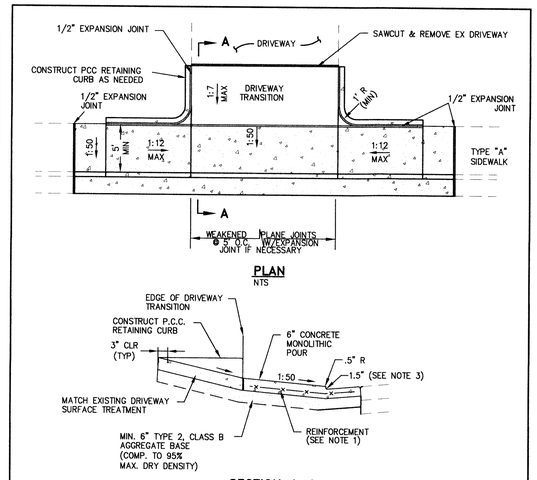

NOTES:

1. COMMERCIAL DRIVEWAYS TO HAVE 6 INCH X 6 INCH 10/10 WIRE MESH EXTENDED INTO GUTTER PAN.
2. DRIVEWAY LANDING, SIDEWALK, CURB & GUTTER TO BE MONOLITHIC POUR TO A.C. LINE.
3. CURB HEIGHT AT LANDING SHALL BE 1 INCH MINIMUM AND 2 INCH MAXIMUM (3 INCH MAX UPON CARSON CITY PUBLIC WORKS APPROVAL) 2 INCH RADIUS TO BE USED WHEN CURB HEIGHT AT LANDING IS GREATER THAN 2 INCHES.
4. DRIVEWAY APRONS SHALL BE CONSTRUCTED IN COMPLIANCE WITH STANDARD DETAILS C-5.1.1 AND C-5.2.1.

NO.	REVISION	DATE	STANDARD DETAIL FOR PUBLIC WORKS CONSTRUCTION	SECTION CARSON CITY
			P.C.C. DRIVEWAY APRON TYPE 1	DRAWING NO. C-5.2.3
APPROVED BY:		7/09		DATE 7/2009

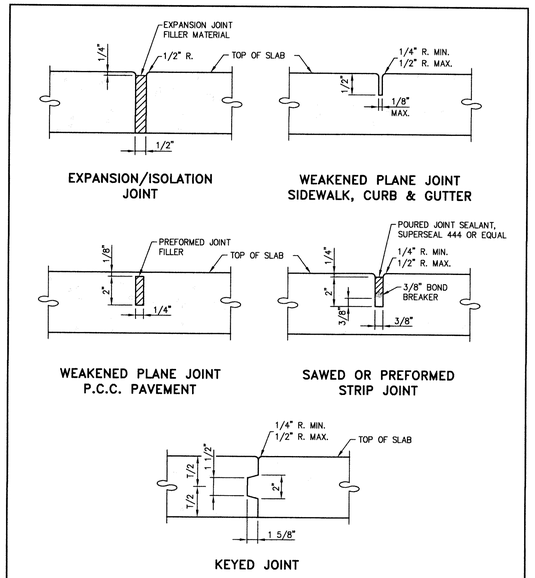

NOTES:

1. ALL CONCRETE EDGING AND JOINTING SHALL CONFORM TO SECTION 312.09 OF THE STANDARD SPECIFICATIONS FOR PUBLIC WORKS CONSTRUCTION (SSPWC).

NO.	REVISION	DATE	STANDARD DETAIL FOR PUBLIC WORKS CONSTRUCTION	SECTION CARSON CITY
			P.C.C. JOINTING DETAILS	DRAWING NO. C-5.1.1 (312)
APPROVED BY:		7/09		DATE 7/2009

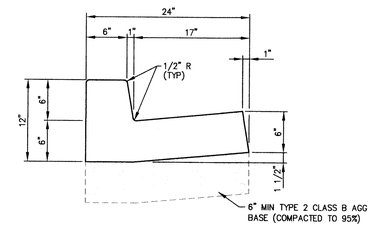

NOTES:

1. PORTLAND CEMENT CONCRETE (P.C.C.) SHALL HAVE THE FOLLOWING CHARACTERISTICS: SYNTHETIC FIBER-REINFORCEMENT (AT A MINIMUM OF 1 POUND PER CUBIC YARD), 4000 PSI MIN COMPRESSIVE STRENGTH @ 28 DAYS, MIN 6 SACKS OF CEMENT PER CUBIC YARD WITH A MAX. WATER/CEMENT RATIO OF 0.45, AIR ENTRAINMENT 6% ±1.5%, SLUMP AT 1 TO 4 INCHES ALL MATERIALS SHALL CONFORM TO SECTION 202 OF THE STANDARD SPECIFICATIONS FOR PUBLIC WORKS CONSTRUCTION.
2. ALL CONCRETE CURB & GUTTER SHALL HAVE 1/2 INCH EXPANSION JOINTS EVERY 30 FEET (UNLESS APPROVED OTHERWISE BY THE ENGINEER) AND AT ALL CURB RETURNS AND SHALL HAVE WEAKENED PLANE JOINTS EVERY 10 FEET. CONCRETE EDGING AND JOINTING SHALL BE CONSTRUCTED IN ACCORDANCE WITH STANDARD DETAIL C-5.1.1 AND CONFORM TO SECTION 312.09 OF THE STANDARD SPECIFICATIONS FOR PUBLIC WORKS CONSTRUCTION (SSPWC).
3. ALL AGGREGATE BASE SHALL BE TYPE 2, CLASS B AND CONFORM TO SECTION 200.01. OF THE STANDARD SPECIFICATIONS FOR PUBLIC WORKS CONSTRUCTION, AND SHALL BE MECHANICALLY COMPACTED TO 95% COMPACTION, IN CONFORMANCE WITH SECTION 308.05 OF THE STANDARD SPECIFICATIONS FOR PUBLIC WORKS CONSTRUCTION.
4. CURBS SHALL BE MARKED WITH A 2 INCH "S" ON THE TOP OF CURB AT SEWER LATERAL LOCATIONS.

NO.	REVISION	DATE	STANDARD DETAIL FOR PUBLIC WORKS CONSTRUCTION	SECTION CARSON CITY
			PCC CURB & GUTTER TYPE 1	DRAWING NO. C-5.1.3
APPROVED BY:		7/09		DATE 7/2009

DESIGNED BY: BD
DRAWN BY: BD
CHECKED BY: RF
DWG NO.: 3-0906BS1.DWG
SCALE (HORIZ): X"=XX'
SCALE (VERT): X"=XX'
PLOT DATE: 2011 FEB 04

CARSON CITY PUBLIC WORKS DEPARTMENT
3505 BUTTI WAY CARSON CITY, NEVADA 89701
PH: 887-2355 FAX: 887-2112

PROFESSIONAL ENGINEER — STATE OF NEVADA — ROBERT D. FELLOWS — Exp: 6/30/11 — CIVIL — No.12497
2-7-11

REV.	DATE	DESCRIPTION	BY	APP'D

FOR BIDDING PURPOSES ONLY

EAST LONG STREET CDBG PEDESTRIAN IMPROVEMENTS
PROJECT No. 3.0906

CONSTRUCTION DETAILS

SHEET 8 OF 12

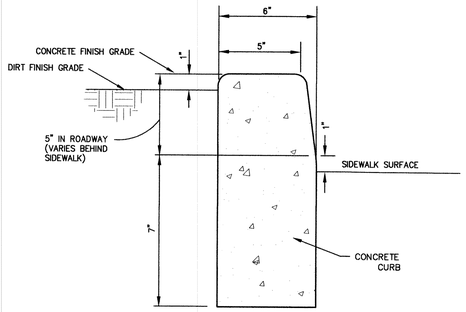

NOTES:

1. NO CONCRETE SHALL BE PLACED UNTIL FORMS AND SUBGRADE ARE INSPECTED BY CARSON CITY PUBLIC WORKS
2. ALL CONCRETE EDGING AND JOINTING SHALL BE CONSTRUCTED IN ACCORDANCE WITH STD. DETAIL 5.1.1 AND CONFORM TO SEC. 312.09 OF THE STANDARD SPECIFICATIONS FOR PUBLIC WORKS CONSTRUCTION (SSPWC).

NO.	REVISION	DATE	STANDARD DETAIL FOR PUBLIC WORKS CONSTRUCTION	SECTION CARSON CITY
			P.C.C. RETAINING CURB	DRAWING NO. C-5.3.10
APPROVED BY:		7/09		DATE 7/2009

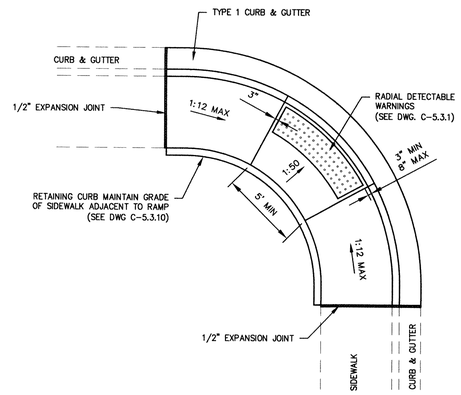

PLAN
NTS

NOTES:

1. NOT FOR USE WITH OFFSET SIDEWALKS.
2. RETAINING CURBS ARE TO BE USED IN ALL CASES AND FINISH GRADE AT BACK OF SIDEWALK IS TO BE RAISED TO TOP OF RETAINING CURB ELEVATION.
3. SEE "CURB RAMP GENERAL NOTES" DWG C-5.3.1 FOR FURTHER REQUIREMENTS.

NO.	REVISION	DATE	STANDARD DETAIL FOR PUBLIC WORKS CONSTRUCTION	SECTION CARSON CITY
			PARALLEL CURB RAMP APEX	DRAWING NO. C-5.3.5
APPROVED BY:		7/09		DATE 7/2009

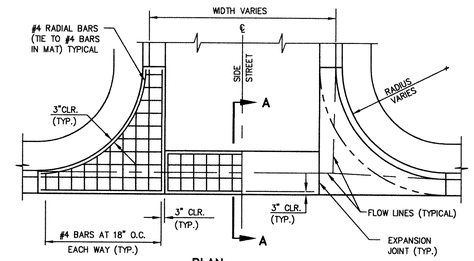

PLAN

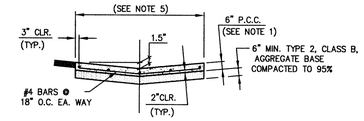

SECTION A–A

NOTES:

1. PORTLAND CEMENT CONCRETE (P.C.C.) SHALL HAVE THE FOLLOWING CHARACTERISTICS: SYNTHETIC FIBER–REINFORCEMENT (AT A MINIMUM OF 1 POUND PER CUBIC YARD), 4000 PSI MIN. COMPRESSIVE STRENGTH @ 28 DAYS, MIN. 6 SACKS OF CEMENT PER CUBIC YARD WITH A MAX. WATER/CEMENT RATIO OF 0.45, AIR ENTRAINMENT 6% ±1.5%, SLUMP AT 1 TO 4 INCHES. ALL MATERIALS SHALL CONFORM TO SSPWC SECTION 202. POLYPROPYLENE FIBERS SHALL BE ADDED TO THE P.C.C. PER THE MANUFACTURER'S RECOMMENDATIONS.
2. FOR INDUSTRIAL AREAS, AN ENGINEERED DESIGN IS REQUIRED.
3. AGGREGATE BASE SHALL BE ENGINEERED TYPE 2, CLASS B WITH 95% COMPACTION.
4. VALLEY GUTTER SHALL HAVE WEAKENED PLANE JOINTS EVERY 10 FEET.
5. LOCAL AND COLLECTOR STREETS, WIDTH = 6 FEET. ARTERIAL STREETS (DRIVEWAYS ONLY), WIDTH = 10 FEET.
6. VALLEY GUTTER SECTIONS (SPANDRELS) ALONG CURB & GUTTER SHALL BE A MONOLITHIC POUR AS SHOWN.
7. ALL CONCRETE EDGING AND JOINTING SHALL BE CONSTRUCTED IN ACCORDANCE WITH STANDARD DETAIL C-5.1.1 AND CONFORM TO SECTION 312.09 OF THE STANDARD SPECIFICATIONS FOR PUBLIC WORKS CONSTRUCTION (SSPWC).

NO.	REVISION	DATE	STANDARD DETAIL FOR PUBLIC WORKS CONSTRUCTION	SECTION CARSON CITY
			P.C.C. VALLEY GUTTER	DRAWING NO. C-5.1.2
APPROVED BY:		7/09		DATE 7/2009

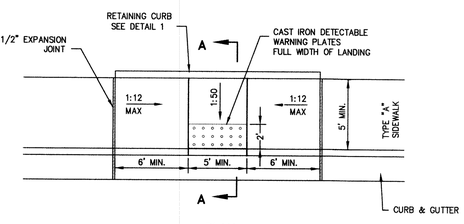

PLAN
NTS

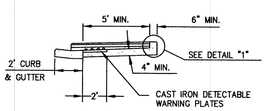

SECTION A–A
NTS

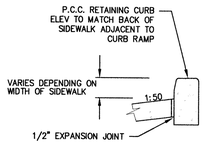

DETAIL 1
NTS

NOTES:

1. RETAINING CURB TO BE USED IN ALL CASES. MAINTAIN SLOPE OF SIDEWALK OUTSIDE OF CURB RAMP.
2. SEE "CURB RAMP GENERAL NOTES" DWG C-5.3.1 FOR FURTHER REQUIREMENTS.

NO.	REVISION	DATE	STANDARD DETAIL FOR PUBLIC WORKS CONSTRUCTION	SECTION CARSON CITY
			MID BLOCK CURB RAMP	DRAWING NO. C-5.3.9
APPROVED BY:		7/09		DATE 7/2009

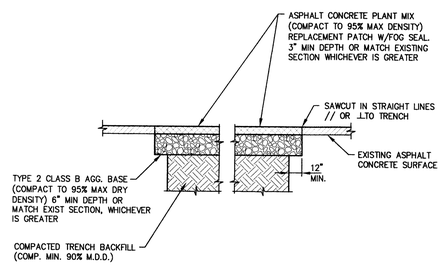

NOTES:

1. IF SAWCUT IS WITHIN 24 INCHES OF EDGE OF A.C. PAVEMENT REMOVE EXISTING PAVEMENT TO THAT EDGE AND REPLACE ENTIRE SECTION.
2. BITUMINOUS MATERIAL SHALL MEET THE REQUIREMENTS OF SECTIONS 201 AND 320 OF THE STANDARD SPECIFICATIONS FOR PUBLIC WORKS CONSTRUCTION.
3. MIXING, SPREADING, AND COMPACTING OF BITUMINOUS PAVEMENT SHALL BE DONE ONLY WHEN THE SURFACE ON WHICH THE MATERIALS ARE TO BE PLACED IS DRY AND WHEN THE ATMOSPHERIC TEMPERATURE IS ABOVE 50 DEGREES FAHRENHEIT AND HAS NOT BEEN BELOW 40 DEGREES FAHRENHEIT DURING THE PRECEDING 24 HOURS.
4. FINISHED SURFACE VARIATIONS SHALL BE 0 TO 0.25 INCHES ABOVE EXISTING SURFACE. ALL HUMPS EXCEEDING THIS TOLERANCE SHALL BE CORRECTED BY REMOVAL OF MATERIAL AND REPLACING IT WITH NEW MATERIAL. FINISHED SURFACE OF PATCH SHALL NOT BE BELOW EXISTING ADJACENT SURFACE.
5. PLANTMIX BITUMINOUS PAVEMENT SURFACE COURSE SHALL BE PG-64-22 TYPE 3 AND SUB SURFACE COURSES SHALL BE PG-64-22 TYPE 3 UNLESS OTHERWISE NOTED.
6. PLANTMIX BITMUMINOUS PAVEMENT PATCHES SHALL MATCH EXISTING SECTION OR HAVE A MINIMUM THICKNESS OF 5 INCHES, WHICHEVER IS GREATER.
7. PLANS SHALL SPECIFY PAVEMENT PATCH AND AGGREGATE BASE DEPTHS AS SPECIFIED BY THE DESIGN ENGINEER.

NO.	REVISION	DATE	STANDARD DETAIL FOR PUBLIC WORKS CONSTRUCTION	SECTION CARSON CITY
			PAVEMENT PATCH	DRAWING NO. C-5.1.6
APPROVED BY:		7/09		DATE 7/2009

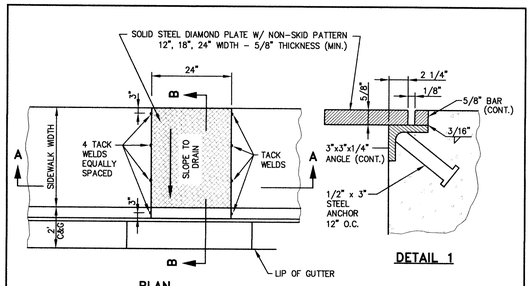

PLAN **DETAIL 1**

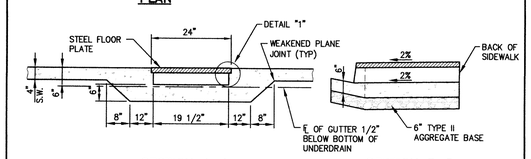

SECTION A–A **SECTION B–B**

NOTES:

1. IF WIDTH OF PLATE IS GREATER THAN 24 INCHES, A SPECIAL DESIGN IS REQUIRED.
2. ALL EXPOSED METAL PARTS SHALL BE GALVANIZED AND ALL GALVANIZING DAMAGED BY FABRICATION OR INSTALLATION SHALL RECEIVE TWO COATS OF ALUMINUM PAINT (GALVONOX OR EQUAL).
3. SHARP EDGES SHALL BE GROUND OFF AND PAINTED.
4. FIBER–REINFORCED PORTLAND CEMENT CONCRETE (P.C.C.) SHALL HAVE THE FOLLOWING CHARACTERISTICS: 4000 PSI MIN. COMPRESSIVE STRENGTH @ 28 DAYS, MIN. 6 SACKS OF CEMENT PER CUBIC YARD WITH A MAX. WATER/CEMENT RATIO OF 0.45, AIR ENTRAINMENT 6% ±1.5%, SLUMP AT 1 TO 4 INCHES. ALL MATERIALS SHALL CONFORM TO SSPWC SECTION 202. POLYPROPYLENE FIBERS SHALL BE ADDED TO THE P.C.C. PER THE MANUFACTURER'S RECOMMENDATIONS.
5. BASE BENEATH CONCRETE DRAIN SUPPORT STRUCTURE SHALL BE 6 INCH MIN. TYPE 2, CLASS B AGGREGATE BASE, COMPACTED TO A MINIMUM 95% OF MAXIMUM DRY DENSITY.

NO.	REVISION	DATE	STANDARD DETAIL FOR PUBLIC WORKS CONSTRUCTION	SECTION CARSON CITY
			SIDEWALK CROSS–DRAIN	DRAWING NO. C-4.1.8
APPROVED BY:		7/09		DATE 7/2009

DESIGNED BY: BD
DRAWN BY: BD
CHECKED BY: RF
DWG NO.: 3-0906BS1.DWG
SCALE (HORIZ): X"=XX'
SCALE (VERT): X"=XX'
PLOT DATE: 2011 FEB 04

CARSON CITY PUBLIC WORKS DEPARTMENT
3505 BUTTI WAY CARSON CITY, NEVADA 89701
PH: 887-2355 FAX: 887-2112

PROFESSIONAL ENGINEER ROBERT D. FELLOWS Exp: 6/30/11 CIVIL No. 12497 STATE OF NEVADA
2-7-11

REV.	DATE	DESCRIPTION	BY	APP'D

FOR BIDDING PURPOSES ONLY

EAST LONG STREET CDBG PEDESTRIAN IMPROVEMENTS
PROJECT No. 3.0906

CONSTRUCTION DETAILS

SHEET 9 OF 12

H:\Projects\3.0906 long st ped imp\dwg\3-0906bs1.dwg, D12-9, 2/4/2011 9:13:24 AM, BDoyle

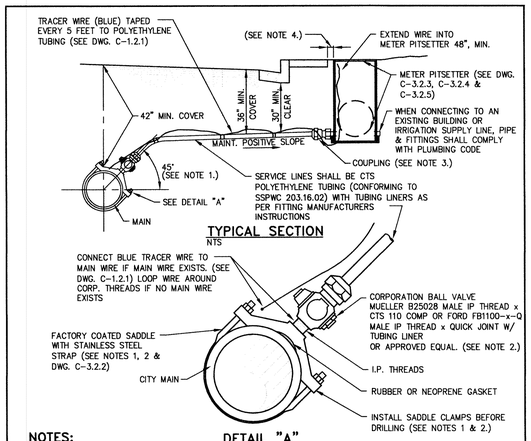

TYPICAL SECTION
NTS

DETAIL "A"
NTS

NOTES:

1. MINIMUM DISTANCE BETWEEN TAPS AND MAINLINE FITTINGS, INCLUDING BELLS SHALL BE 18 INCHES. TAPPING SADDLE MUST BE AT 45 DEGREE ANGLE, EXCEPTIONS MUST BE APPROVED BY CARSON CITY WATER UTILITY.
2. CORPORATION VALVES AND SERVICE SADDLES SHALL CONFORM TO AWWA C800 AND BE NO LESS THAN THE SERVICE LINE SIZE. WHEN REPLACING AN EXISTING SERVICE LINE AND A SIZE LARGER THAN SHOWN IS ENCOUNTERED, THE LARGER SIZE LINE, FITTINGS AND SADDLE SHALL BE INSTALLED UNLESS APPROVED BY CARSON CITY WATER UTILITY.
3. COUPLING FITTING SHALL CONFORM TO AWWA C800 AND BE A MUELLER H-15451 CTS 110 COMP OR FORD C14-xx-Q QUICK JOINT W/ TUBING LINER x FEMALE IP THREAD OR APPROVED EQUAL.
4. METER PITSETTERS TO BE PLACED 4 INCHES FROM BACK OF SIDEWALK IN AREAS WHERE SIDEWALK IS ADJACENT TO CURB, OR 6 INCHES FROM BACK OF CURB IN AREAS WHERE SIDEWALK IS OFFSET FROM CURB, OR AS DIRECTED BY CARSON CITY WATER UTILITY. IN AREAS WHERE NO CURB OR SIDEWALK IS PRESENT, METER PITSETTERS SHALL BE PLACED WITHIN THE RIGHT-OF-WAY AS SHOWN ON THE APPROVED PLANS.
5. DISCONTINUANCE OF USE OF A SERVICE REQUIRES ABANDONMENT OF THE SERVICE. NOTIFY CARSON CITY PUBLIC WORKS FOR METER REMOVAL PRIOR TO PROCEEDING WITH ABANDONMENT. REMOVE EXISTING METER BOX AND EXPOSE CORP STOP AT MAIN FOR SHUT-OFF. ALL PIPING OR TUBING SHALL BE DISCONNECTED FROM CORP AND PLUGGED AT BOTH ENDS. CARSON CITY PUBLIC WORKS SHALL BE NOTIFIED FOR INSPECTION OF CORP ASSEMBLY PRIOR TO BACKFILLING.

NO.	REVISION	DATE	STANDARD DETAIL FOR PUBLIC WORKS CONSTRUCTION	SECTION CARSON CITY
			3/4" TO 2" WATER SERVICE	DRAWING NO. C-3.2.1 (203,307)
APPROVED BY:		07/09		DATE 7/2009

MATERIALS LIST:

1. PVC BOX MIN. WALL THICKNESS 0.300", MUELLER THERMAL-COIL METER BOX OR APPROVED EQUAL FACTORY EQUIPED AS LISTED, CONFORMING TO AWWA C800.
2. INSULATION PAD (4" THICK)
3. AIR SPACE
4. PLATFORM
5. PLATFORM SUPPORT
6. POLYBUTYLENE TUBING CLASS 250
7. I.P. THREADS
8. ALUMINUM BOTTOM
9. WATER METER(S) & TRANSPONDER(S) SUPPLIED BY CARSON CITY WATER UTILITY
10. CAST IRON LOCKING LID W/ 2" TRANSPONDER OPENING(S)
    MUELLER METER BOX SETTER LIDS
    FOR 3/4" SINGLE, PART No. TRPL-780112
    FOR 3/4" DOUBLE, PART No. TRPL-780111
    FOR 1" SINGLE, PART No. TRPL-780113
11. MUELLER LOCKABLE VALVE (NO. 14265)
12. MUELLER ANGLE CHECK VALVE
13A. INLET LINE TO BE 3/4" MIN. (SEE NOTE 1. AND DWG. C-3.2.1)
13B. INLET LINE TO BE 1" MIN. (SEE NOTE 1. AND DWG. C-3.2.1)
14. FACTORY SUPPLIED CAP TO REMAIN IN PLACE UNTIL SUPPLY LINE IS EXTENDED BY CUSTOMER
15. BLUE TRACER WIRE EXTEND INTO METER PITSETTER 48" MIN.

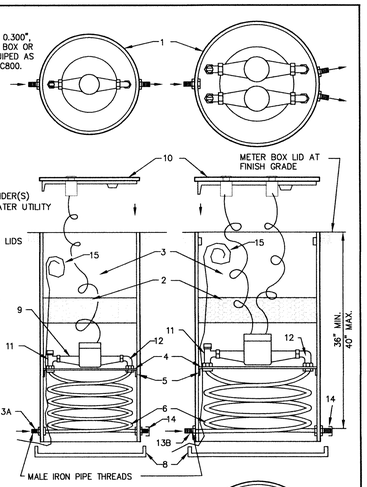

NOTES:

1. SERVICE LINE-MIN. SIZE AS SHOWN HEREON (3/4-1")
2. PIT SETTER EXTENSION, 6" TOTAL MAX. SHALL ONLY BE USED UPON APPROVAL BY CARSON CITY WATER UTILITY

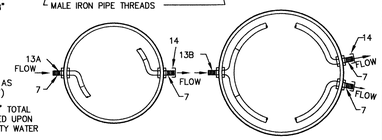

15" DIAMETER THERMAL-COIL METER BOX FOR 3/4" SINGLE PIT SETTER

18" DIAMETER THERMAL-COIL METER BOX FOR 3/4" DOUBLE, 1" SINGLE PIT SETTER

NO.	REVISION	DATE	STANDARD DETAIL FOR PUBLIC WORKS CONSTRUCTION	SECTION CARSON CITY
			3/4" DOUBLE AND SINGLE PIT SETTER, 1" SINGLE PIT SETTER	DRAWING NO. C-3.2.3 (203, 307)
APPROVED BY:		7/09		DATE 7/2009

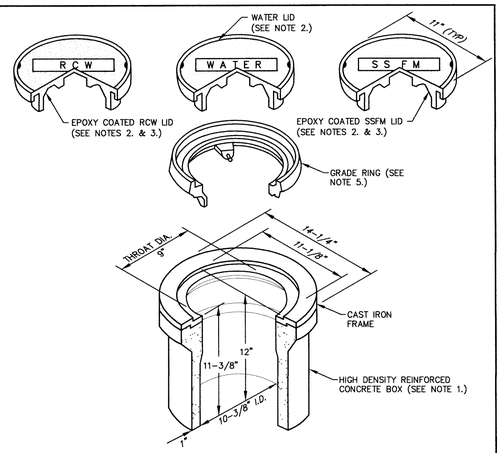

NOTES:

1. VALVE BOX AND LID SHALL BE H20 TRAFFIC RATED WITH A MINIMUM INSIDE DIAMETER OF 10 INCHES (CHRISTY G5 TRAFFIC VALVE BOX & LID).
2. CAST IRON LID SHALL BE MARKED AT THE FACTORY "WATER" FOR WATER APPLICATIONS, "RECLAIMED WATER" OR "RCW" FOR RECLAIMED WATER APPLICATIONS, AND "SS FORCE MAIN" OR "SSFM" FOR SANITARY SEWER APPLICATIONS.
3. FOR RECLAIMED WATER AND SANITARY SEWER APPLICATIONS, CAST IRON LID SHALL BE EPOXY COATED AT THE FACTORY, OR POWDER COATED, COLOR SHALL BE PURPLE FOR RECLAIMED WATER APPLICATIONS AND GREEN FOR SANITARY SEWER APPLICATIONS.
4. VALVE BOX SHALL BE SET OR ADJUSTED TO GRADE PER DRAWING NO. C-3.1.4, RISER FOR ADJUSTED VALVE BOX SHALL BE PER DRAWING NO. C-3.1.4. FOR OVERLAY ADJUSTMENTS, RISER WILL NOT REQUIRE REPLACEMENT OR EXTENSION IF IT EXTENDS A MINIMUM OF 2 INCHES INTO ADJUSTED VALVE BOX.
5. GRADE RING IS NOT ALLOWED FOR NEW VALVE BOX INSTALLATIONS. CAST IRON GRADE RING (CHRISTY G5 GRADE RING) MAY BE USED FOR OVERLAY ADJUSTMENTS WHEN OVERLAY DEPTH EQUALS THE GRADE RING DEPTH. NO MORE THAN ONE GRADE RING ALLOWED PER BOX.

NO.	REVISION	DATE	STANDARD DETAIL FOR PUBLIC WORKS CONSTRUCTION	SECTION CARSON CITY
			VALVE BOX & LID	DRAWING NO. C-3.1.6 (203,306,307)
APPROVED BY:		07/09		DATE 7/2009

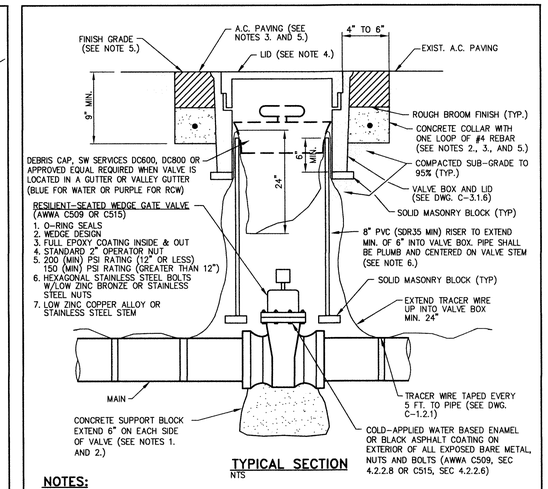

TYPICAL SECTION
NTS

NOTES:

1. SUPPORT BLOCKING SHALL BE POURED AGAINST UNDISTURBED SOIL AND NOT PREVENT ACCESS TO BOLT ASSEMBLY OR VALVE JOINTS.
2. CONCRETE SHALL CONFORM TO THE SSPWC SECTION 337.10. REBAR SHALL ONLY BE USED WHEN THE VALVE BOX IS LOCATED OUTSIDE PAVED AREAS.
3. THE CONCRETE COLLAR SHALL BE LEFT 2 1/2 INCHES - 3 INCHES BELOW FINISHED ASPHALT SURFACE. APPLY AN APPROVED TACK COAT (CONFORMING TO THE SSPWC SECTION 316) AND FILL VOID BETWEEN ADJACENT PAVEMENT AND FRAME WITH TYPE 3 PG 64-22 PAVING (CONFORMING TO THE SSPWC SECTION 320). APPLY FOG SEAL (CONFORMING TO THE SSPWC SECTION 317) TO THE ASPHALT SURFACE. ALL CUTS IN PAVING SHALL BE STRAIGHT AND EVEN. EXCEPTION: WHEN STRUCTURE NOT LOCATED IN ASPHALT PAVEMENT OR IN AN UNPAVED AREA, EXTEND CONCRETE TO FINISH GRADE.
4. LIDS SHALL BE SET FLUSH WITH FINISH GRADE UNLESS OTHERWISE NOTED.
5. WHEN LOCATED IN NDOT RIGHT-OF-WAY, CONCRETE COLLAR SHALL CONFORM TO NDOT STANDARD PLAN SHT R-4.3.3 AND STANDARD SPECIFICATION 609.
6. RISER COLOR SHALL BE BLUE, OR SAME COLOR AS MAIN FOR WATER APPLICATIONS, PURPLE FOR RECLAIMED WATER APPLICATIONS, AND GREEN FOR SANITARY SEWER APPLICATIONS.
7. VALVES ON FIRE LINES SHALL BE UL/FM APPROVED AND MEET ALL APPLICABLE NFPA REQUIREMENTS.

NO.	REVISION	DATE	STANDARD DETAIL FOR PUBLIC WORKS CONSTRUCTION	SECTION CARSON CITY
			GATE VALVE	DRAWING NO. C-3.1.4 (203,307)
APPROVED BY:		07/09		DATE 7/2009

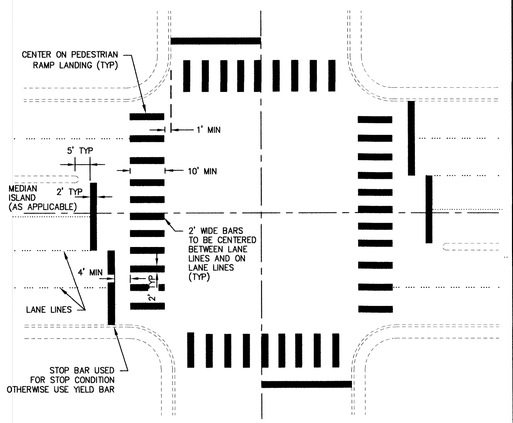

TYPICAL CROSSWALK STRIPING DETAIL

NOTES:

1. ALL STRIPING SHALL CONFORM TO THE MANUAL ON UNIFORM TRAFFIC CONTROL DEVICES (MUTCD) FOR STREETS AND HIGHWAYS, CURRENT EDITION.
2. INLAY TAPE STRIPING AND/OR PAVEMENT LEGENDS SHALL BE INSTALLED PER MANUFACTURERS RECOMMENDATIONS.
3. CROSSWALK MARKINGS SHALL BE INSTALLED AT ALL TRAFFIC SIGNAL LOCATIONS AND AT OTHER LOCATIONS AS DIRECTED BY THE CARSON CITY ENGINEER OR PUBLIC WORKS DIRECTOR.

NO.	REVISION	DATE	STANDARD DETAIL FOR PUBLIC WORKS CONSTRUCTION	SECTION CARSON CITY
			CROSSWALK LEGEND	DRAWING NO. C-5.4.3
APPROVED BY:		7/09		DATE 7/2009

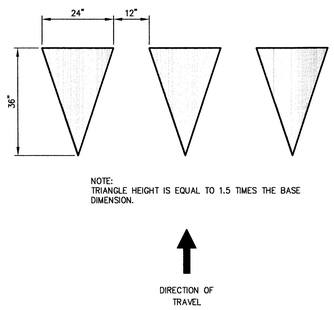

NOTES:

1. ALL STRIPING SHALL CONFORM TO THE MANUAL ON UNIFORM TRAFFIC CONTROL DEVICES (MUTCD) FOR STREETS AND HIGHWAYS, CURRENT EDITION.
2. ALL PAINTED STRIPING AND PAVEMENT LEGENDS SHALL CONFORM TO CARSON CITY PUBLIC WORKS SPECIFICATIONS.
3. ALL INLAY TAPE STRIPING AND/OR PAVEMENT LEGENDS SHALL BE INSTALLED PER MANUFACTURERS RECOMMENDATIONS.
4. YIELD LINE TO BE INSTALLED FROM EDGE OF LANE TO EDGE OF PAVEMENT OR LIP OF CURB.

NO.	REVISION	DATE	STANDARD DETAIL FOR PUBLIC WORKS CONSTRUCTION	SECTION CARSON CITY
			YIELD LINE LAYOUT	DRAWING NO. C-5.4.4
APPROVED BY:		7/09		DATE 7/2009

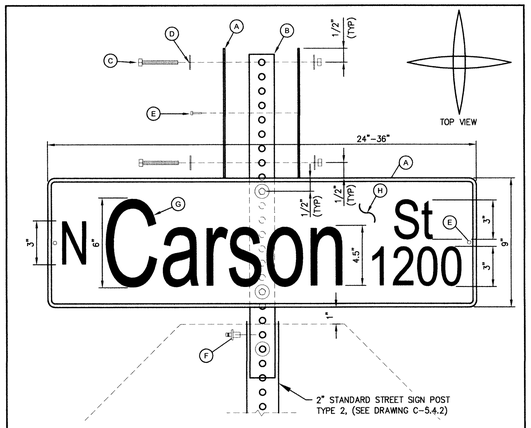

NOTES:

1. STREET NAME SIGN SHALL BE IN CONFORMANCE WITH THE LATEST EDITION OF THE M.U.T.C.D.
2. LETTERING FONT SHALL BE "HIGHWAY EM".
3. SUBMITTAL REQUIRED TO CITY FOR LONGER NAMES OR DROP LETTERS.
4. MATERIALS SHALL CONSIST OF:
   A. (4) FLAT PLATE ALUMINUM NO. 6061-T6, .080 GAUGE.
   B. (1) 2-FOOT LONG 1 3/4-INCH "TELESPAR" OR EQUIVALENT
   C. (4) 2 1/2-INCH LONG, 5/16-INCH SAE GRADE 5 BOLT & NUT
   D. (8) FLAT WASHERS
   E. (4) 1/8-INCH DIAMETER, STEEL POP RIVET (MEDIUM LENGTH) WITH 1/8-INCH WASHER (ALUMINUM OR STEEL)
   F. (1) 3/8-INCH DRIVE RIVET STEEL "SOUTHCO"
   G. WHITE SHEETING - RETROREFLECTIVE ASTM IX DIAMOND GRADE VIP "3M" OR EQUIVALENT
   H. GREEN SHEETING - TRANSPARENCY ELETRO CUT FILM 1177C "3M" OR EQUILVALENT

NO.	REVISION	DATE	STANDARD DETAIL FOR PUBLIC WORKS CONSTRUCTION	SECTION CARSON CITY
			STREET NAME SIGN AND MOUNTING	DRAWING NO. C-5.4.1
APPROVED BY:		7/09		DATE 7/2009

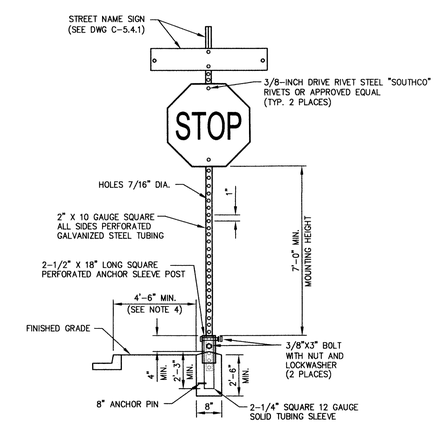

NOTES:

1. SIGN MATERIALS, CONSTRUCTION AND PLACEMENT SHALL BE IN CONFORMANCE WITH THE LATEST EDITION OF THE MANUAL ON UNIFORM TRAFFIC CONTROL DEVICES.
2. STREET NAME SIGN SHALL BE AS SPECIFIED IN STANDARD DETAIL DRAWING NO. C-5.4.1
3. ON STREETS WHERE CURBING DOES NOT EXIST, SET SIGN 6 FEET MINIMUM FROM PAVEMENT EDGE.
4. CONCRETE BASE SHALL BE LOCATED AT BACK OF SIDEWALK, UNLESS OTHERWISE DIRECTED BY THE CITY ENGINEER.
5. ALL REGULATORY SIGNS SHALL USE ASTM TYPE 3 OR 4 INTENSITY SHEETING.

NO.	REVISION	DATE	STANDARD DETAIL FOR PUBLIC WORKS CONSTRUCTION	SECTION CARSON CITY
			TRAFFIC SIGN INSTALLATION	DRAWING NO. C-5.4.2
APPROVED BY:		7/09		DATE 7/2009

DESIGNED BY: BD
DRAWN BY: BD
CHECKED BY: RF
DWG NO.: 3.0906BS1.DWG
SCALE (HORIZ): X"=XX'
SCALE (VERT): X"=XX'
PLOT DATE: 2011 FEB 04

CARSON CITY
PUBLIC WORKS DEPARTMENT
3505 BUTTI WAY CARSON CITY, NEVADA 89701
PH: 887-2355 FAX: 887-2112

PROFESSIONAL ENGINEER STATE OF NEVADA
ROBERT D. FELLOWS
Exp: 6/30/11
CIVIL
No. 12497
2-7-11

REV.	DATE	DESCRIPTION	BY	APP'D

FOR BIDDING PURPOSES ONLY

EAST LONG STREET CDBG
PEDESTRIAN IMPROVEMENTS
PROJECT No. 3.0906

CONSTRUCTION DETAILS

SHEET 10 OF 12

H:\Projects\3.0906 long st ped imp\dwg\3-0906bs1.dwg, DT3-D, 2/4/2011 9:14:04 AM, BDoyd

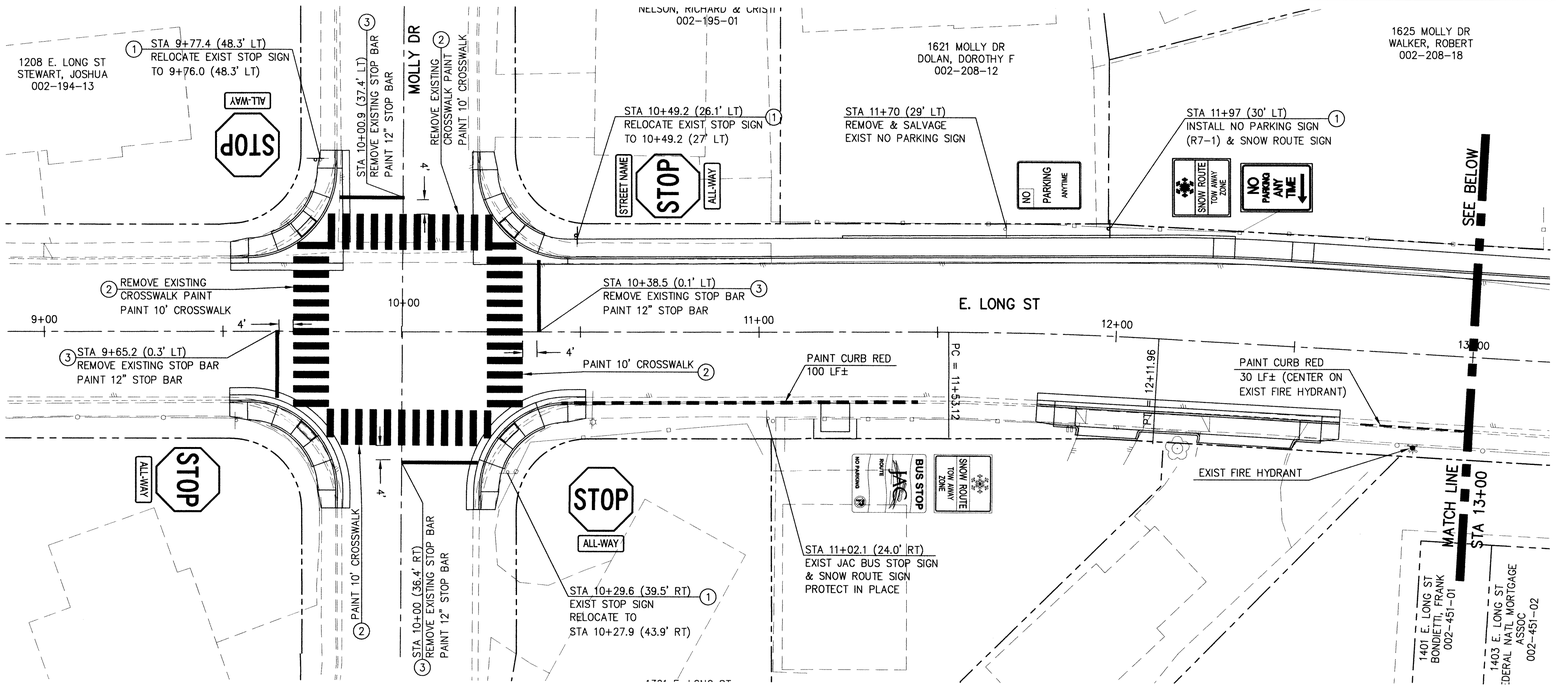

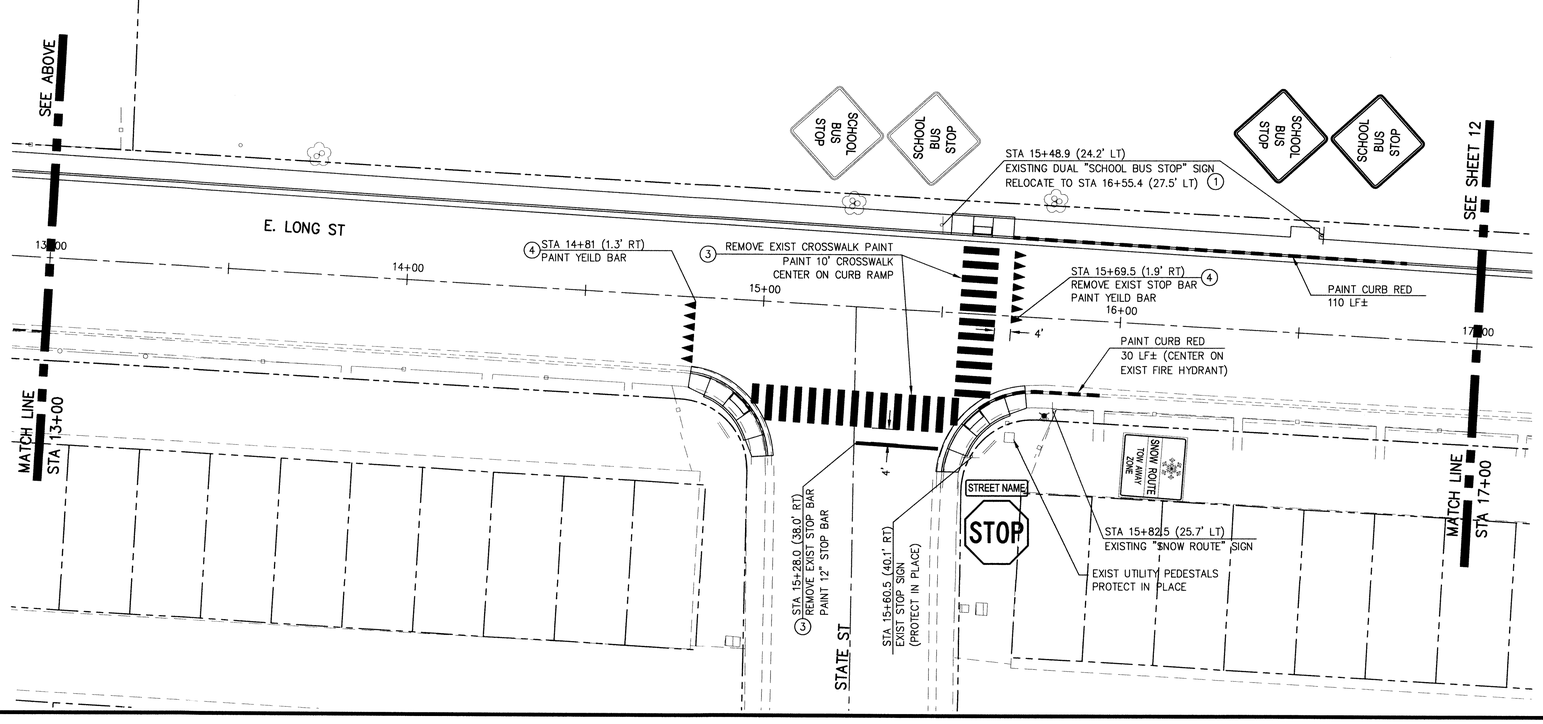

STRIPING NOTES:

1. INSTALL STREET SIGN PER DETAIL C-5.4.2.
2. PAINT 24" X 10' CROSSWALK PER DETAIL C-5.4.3.
3. PAINT 12" STOP BAR PER DETAIL C-5.4.3.
4. PAINT YIELD LINE PER DETAIL C-5.4.4.

SCALE
20 0 10 20
HORIZ: 1" = 20'

Call before you Dig
Avoid cutting underground utility lines. It's costly.
Call 811 OR 1-800-227-2600

DESIGNED BY:	BD
DRAWN BY:	BD
CHECKED BY:	RF
DWG NO:	3-0996BS1.DWG
SCALE (HORIZ):	1"=20'
SCALE (VERT):	X"=XX'
PLOT DATE:	2011.FEB.04

CARSON CITY
PUBLIC WORKS DEPARTMENT
3505 BUTTI WAY CARSON CITY, NEVADA 89701
PH: 887-2355 FAX: 887-2112

PROFESSIONAL ENGINEER STATE OF NEVADA
ROBERT D. FELLOWS
Exp: 6/30/11
CIVIL
No. 12497
2-7-11

REV.	DATE	DESCRIPTION	BY	APP'D

FOR BIDDING PURPOSES ONLY

EAST LONG STREET CDBG PEDESTRIAN IMPROVEMENTS

PROJECT No. 3.0906

STRIPING PLAN
E. LONG STREET
STA 10+00 to STA 17+00

SHEET 11 OF 12

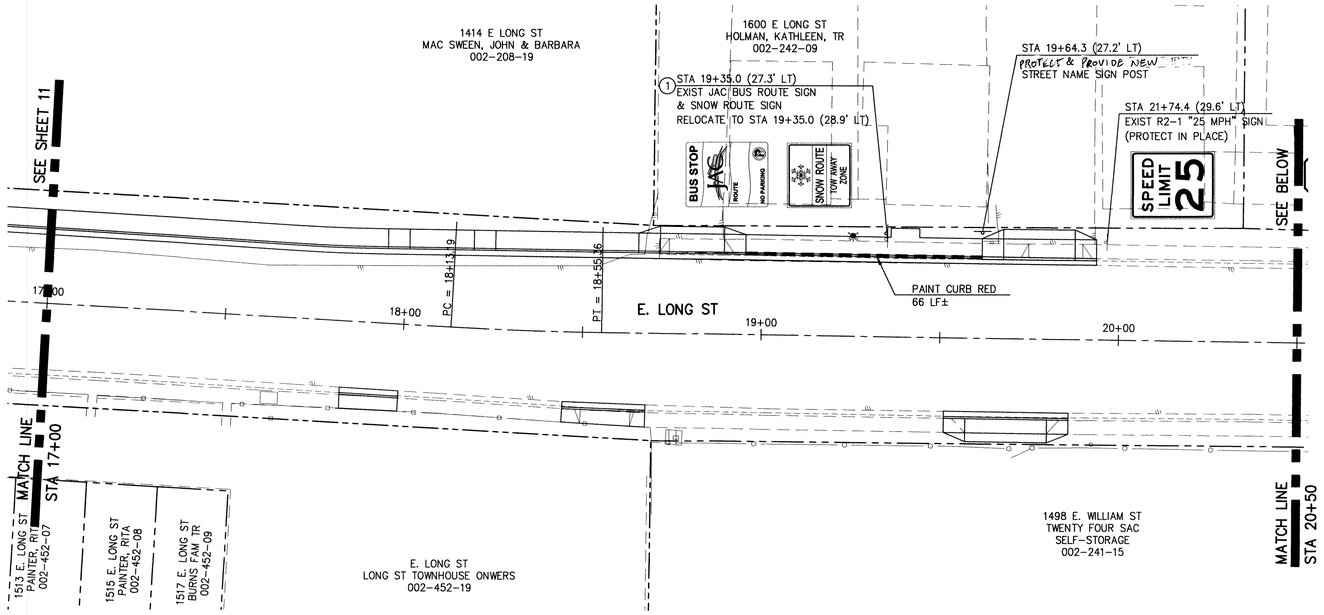

STRIPING NOTES:

1. INSTALL STREET SIGN PER DETAIL C-5.4.2.
2. PAINT 24" X 10' CROSSWALK PER DETAIL C-5.4.3.
3. PAINT 12" STOP BAR PER DETAIL C-5.4.3.
4. PAINT YIELD LINE PER DETAIL C-5.4.4.

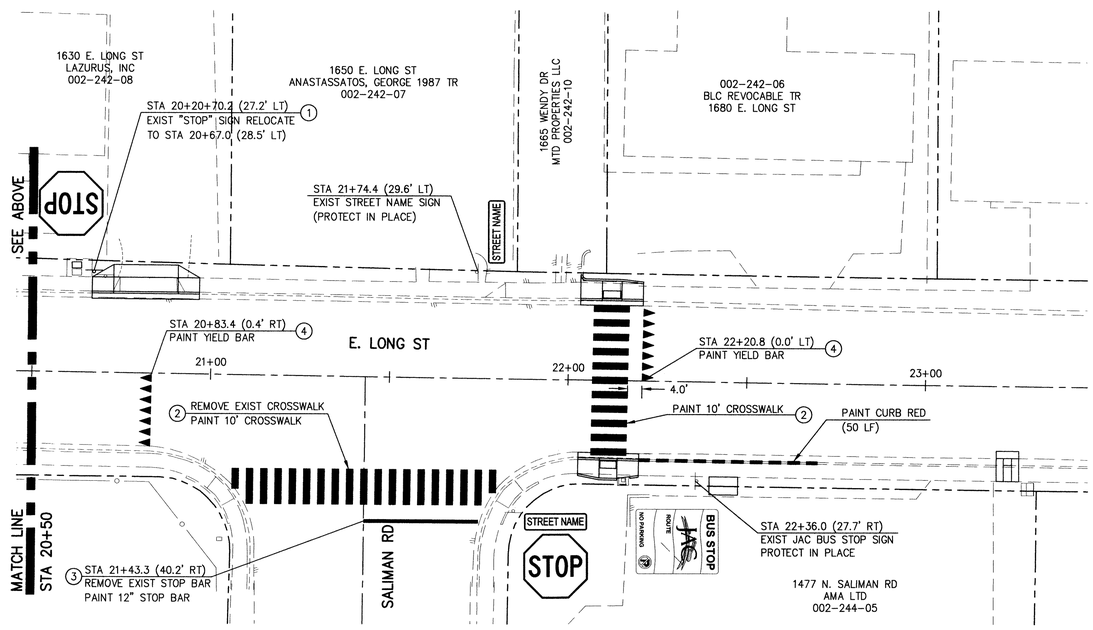

SCALE
HORIZ: 1" = 20'

Call before you Dig
Avoid cutting underground utility lines. It's costly.
Call 811 OR 1-800-227-2600

DESIGNED BY: BD
DRAWN BY: BD
CHECKED BY: RF
DWG NO.: 3-0906BS1.DWG
SCALE (HORIZ): N/A
SCALE (VERT): X"=XX'
PLOT DATE: 2011.FEB.04

CARSON CITY
PUBLIC WORKS DEPARTMENT
3505 BUTTI WAY CARSON CITY, NEVADA 89701
PH: 887-2355 FAX: 887-2112

PROFESSIONAL ENGINEER · STATE OF NEVADA
ROBERT D. FELLOWS
Exp: 6/30/11
CIVIL
No. 12497
2-7-11

REV.	DATE	DESCRIPTION	BY	APP'D

FOR BIDDING PURPOSES ONLY

EAST LONG STREET CDBG PEDESTRIAN IMPROVEMENTS

PROJECT No. 3.0906

STRIPING PLAN
E. LONG STREET
STA 17+00 to STA 23+50

SHEET 12 OF 12

H:\Projects\3.0906 long st ped imp\dwg\3-0906bs1.dwg, STRPE17+00-12, 2/4/2011 2:30:52 PM, BDoyl

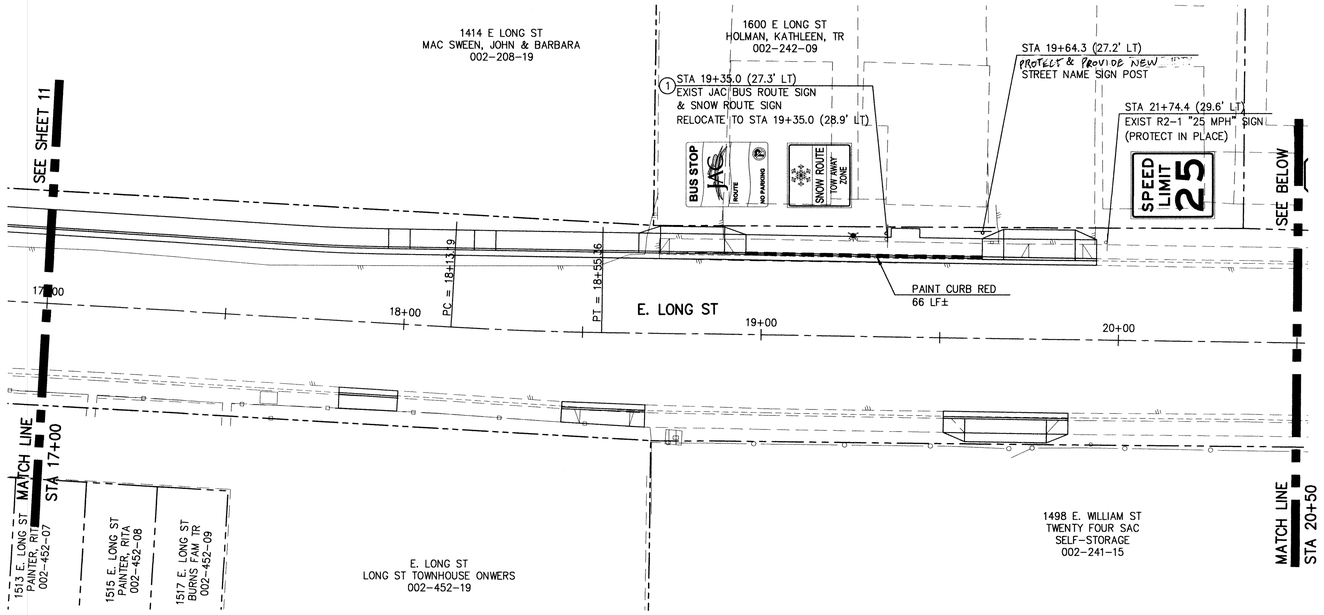

STRIPING NOTES:

1. INSTALL STREET SIGN PER DETAIL C-5.4.2.
2. PAINT 24" X 10' CROSSWALK PER DETAIL C-5.4.3.
3. PAINT 12" STOP BAR PER DETAIL C-5.4.3.
4. PAINT YIELD LINE PER DETAIL C-5.4.4.

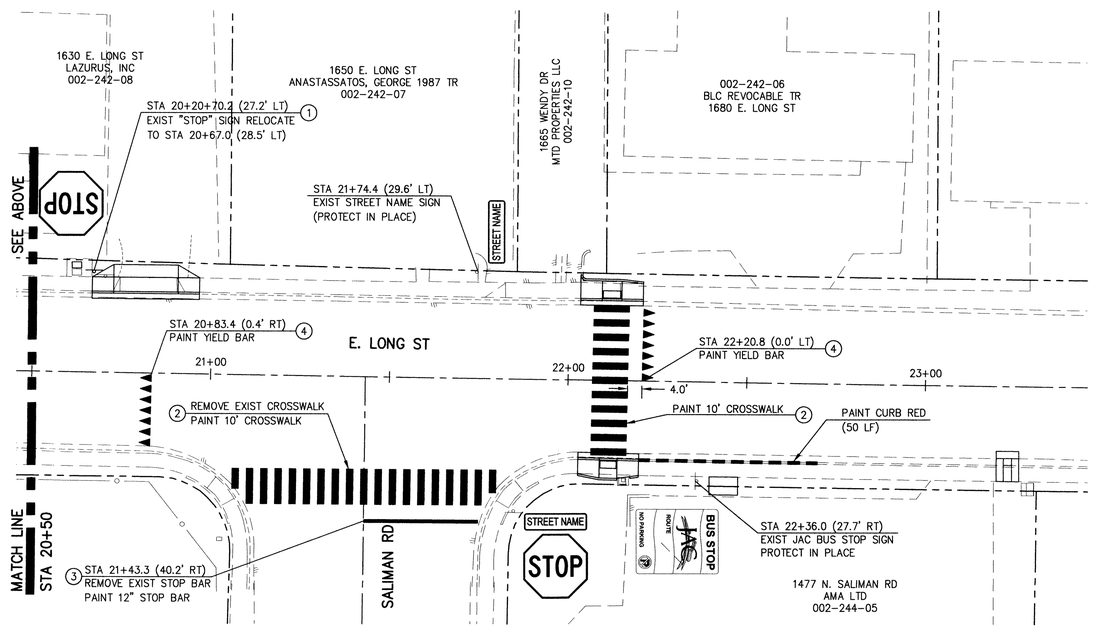

SCALE
HORIZ: 1" = 20'

Call before you Dig
Avoid cutting underground utility lines. It's costly.
Call 811 OR 1-800-227-2600

DESIGNED BY: BD
DRAWN BY: BD
CHECKED BY: RF
DWG NO.: 3-0906BS1.DWG
SCALE (HORIZ): N/A
SCALE (VERT): X"=XX'
PLOT DATE: 2011.FEB.04

CARSON CITY
PUBLIC WORKS DEPARTMENT
3505 BUTTI WAY CARSON CITY, NEVADA 89701
PH: 887-2355 FAX: 887-2112

PROFESSIONAL ENGINEER · STATE OF NEVADA
ROBERT D. FELLOWS
Exp: 6/30/11
CIVIL
No. 12497
2-7-11

REV.	DATE	DESCRIPTION	BY	APP'D

FOR BIDDING PURPOSES ONLY

EAST LONG STREET CDBG PEDESTRIAN IMPROVEMENTS

PROJECT No. 3.0906

STRIPING PLAN
E. LONG STREET
STA 17+00 to STA 23+50

SHEET 12 OF 12

H:\Projects\3.0906 long st ped imp\dwg\3-0906bs1.dwg, STRPE17+00-12, 2/4/2011 2:30:52 PM, BDoyl