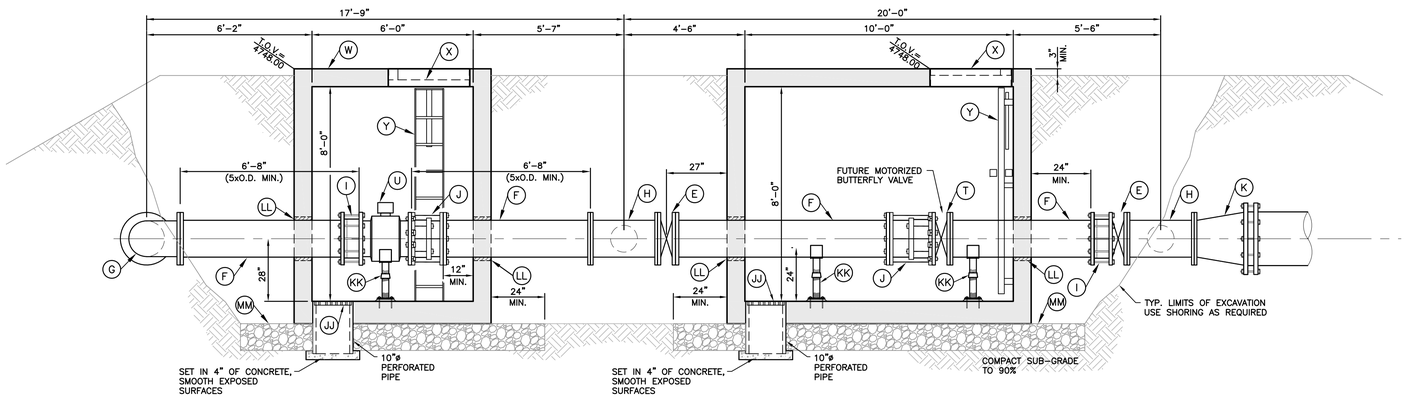

16" FLOW METER VAULT "FM1" & FLOW CONTROL VAULT SECTION (A / C53)

SCALE: 3/8"=1'-0"

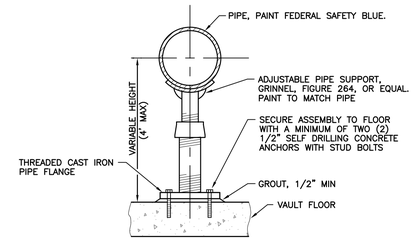

PIPE SUPPORT DETAIL (1 / C53)

NOT TO SCALE

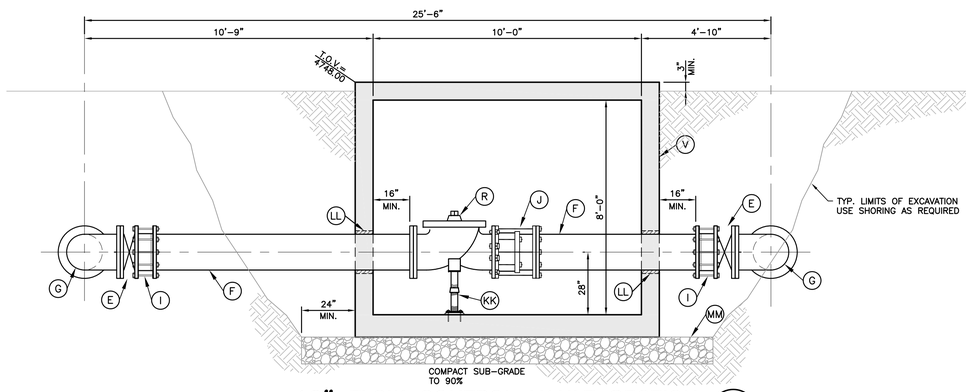

16" FLOW CONTROL VAULT SECTION (B / C53)

SCALE: 3/8"=1'-0"

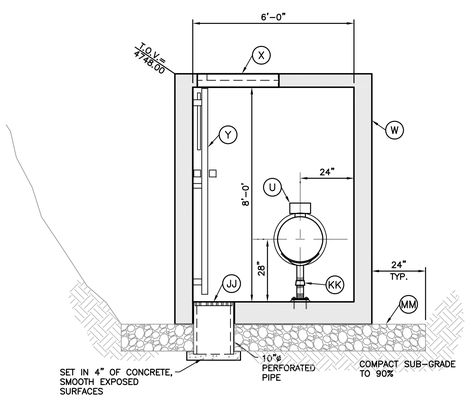

16" FLOW METER VAULT "FM1" SECTION (C / C53)

SCALE: 3/8"=1'-0"

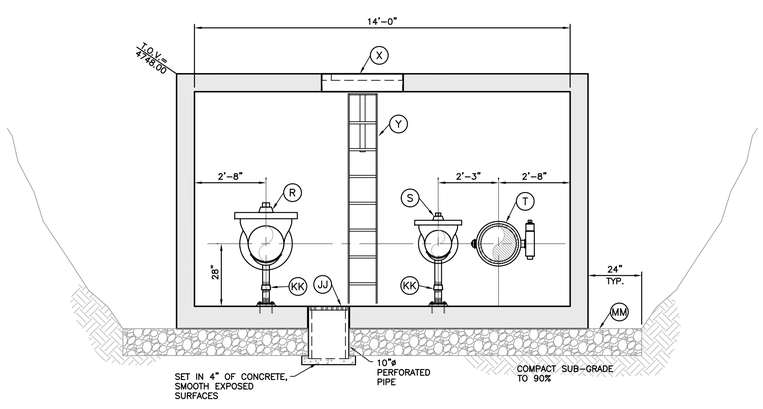

FLOW CONTROL VAULT SECTION (D / C53)

SCALE: 3/8"=1'-0"

VAULT EQUIPMENT MATERIAL LIST

ITEM	QTY.	UNIT	DESCRIPTION
A	3	EA	24"x24"x16" Ductile Iron Tee (Flg x Flg)
B	1	EA	24" Ductile Iron Spool, Flg. x Flg. (verify all lengths and clearances before ordering)
C	4	EA	24" PVC C905 DR-25 Spool (With Restrained Joints)
D	1	EA	24" Butterfly Valve (Flg x MJ)
E	5	EA	16" Gate Valve
F	9	EA	16" Ductile Iron Spool, Flg. x P.E. (verify all lengths and clearances before ordering)
G	3	EA	16"x90° Ductile Iron Elbow (Flg xFlg)
H	2	EA	16"x16"x12" Ductile Iron Tee (Flg x Flg)
I	5	EA	16" Romac Flanged Coupling Adaptors (FCA 501)
J	3	EA	16" Romac Dismantling Joint
K	1	EA	16"x24" Flanged Ductile Iron Reducer
L	1	EA	24"x90° Ductile Iron Elbow (Flg xFlg)
M	2	EA	12"x90° Ductile Iron Elbow (Flg xFlg)
N	2	EA	12" Gate Valve
O	1	EA	12" Romac Flanged Coupling Adaptors (FCA 501)
P	2	EA	12" Ductile Iron Spool, Flg. x P.E. (verify all lengths and clearances before ordering)
Q	1	EA	12" Romac Dismantling Joint
R	1	EA	16" Flow Control Valve (FCV1)
S	1	EA	12" Flow Control Valve (FCV2)
T	1	EA	16" Motorized Butterfly Valve
U	1	EA	16" Flow Meter
V	1	EA	10'x14' Pre-cast concrete Vault designed for H-20 traffic Loading
			(All penetrations made in Vault for new pipe require link-seal gaskets.)
W	2	EA	6'x6' Pre-cast concrete Vault designed for H-20 traffic Loading
			(All penetrations made in Vault for new pipe require link-seal gaskets.)
X	3	EA	Bilco 36"x36" Access Hatch, or Equal, With Flush Mounted Locking Hasp
Y	3	EA	16" Galvanized Steel Ladder with "Ladder-up" safety post. Bolt ladder to wall.
Z	9	EA	24" MEGALUG Mechanical Joint Restraint
AA	1	EA	24"x24"x24" Ductile Iron Tee (Flg x Flg)
BB	2	EA	18"x24" Flanged Ductile Iron Reducer
CC	2	EA	18" Ductile Iron Spool, Flg. x P.E. (verify all lengths and clearances before ordering)
DD	1	EA	18" Romac Dismantling Joint
EE	1	EA	18" Flow Meter
FF	1	EA	18" Romac Flanged Coupling Adaptors (FCA 501)
GG	1	EA	24" Blind Flange
HH	1	EA	18" Butterfly Valve (Flg x Flg)
JJ	3	EA	12"x12" Removable Metal Grate
KK	6	EA	Adjustable Pipe Support Bolted to Floor
LL	10	EA	Line Seal (All penetrations made in Vault for new pipe require link-seal gaskets.)
MM	452	SF	12" Thick x 3/4" Drain Rock, Vibra Plated into Place and Extended 24" Beyond Edge of Vault

NOTES:

1. THIS MATERIAL LIST IS FOR GENERAL CONVENIENCE ONLY AND BY NO MEANS SHOULD BE INTERPRETED AS 100% COMPLETE. THE CONTRACTOR IS RESPONSIBLE FOR ALL ITEMS AND QUANTITIES AS SHOWN ON THE PLANS.
2. INSTALL ALL GAUGES AND DIALS 5' ABOVE THE FINISH FLOOR.
3. ALL STL. PLUMBING SHALL BE FUSION EPOXY LINED AND COATED. STEEL IN VAULT SHALL BE PAINTED FEDERAL SAFETY BLUE.
4. ALL PVC WATER PIPELINES ARE TO BE DISINFECTED ACCORDING TO AWWA STANDARD C651 PER NAC 445A.67145 (6)(c) AND PRESSURE TESTED ACCORDING TO AWWA STANDARD C605 PER NAC 445A.67145 (7)(b). WATER STORAGE TANK DISINFECTION SHALL BE IN ACCORDANCE WITH AWWA C652. DISPOSAL OF HEAVILY CHLORINATED WATER MUST BE COORDINATED WITH NDEP WATER POLLUTION CONTROL.
5. CONTRACTOR TO PROVIDE NUT EXTENSIONS FOR ALL BUTTERFLY VALVES TO EXTEND TOP OF NUT TO BETWEEN 18" AND 24" FROM TOP OF VALVE CAN.

DESIGNED BY: DGR/DLO
DRAWN BY: DGR/DLO
CHECKED BY: TLG
DWG NO.: 4-0800-details.dwg
SCALE (HORIZ): 3/8"=1'-0"
SCALE (VERT): N/A
PLOT DATE: 2/2/11

CARSON CITY
PUBLIC WORKS DEPARTMENT
3505 BUTTI WAY CARSON CITY, NEVADA 89701
PH: 887-2355 FAX: 887-2112

PROFESSIONAL ENGINEER - STATE OF NEVADA
THOMAS LEON GUINN
Exp: 6-30-11
CIVIL
No. 18528

REV.	DATE	DESCRIPTION	BY	APP'D

NORTH/SOUTH WATER TRANSMISSION MAIN
PROJECT - PHASE 2
PROJECT No. 4.0800
PRISON HILL
VAULT DETAILS
.

SHEET C53 OF 96

H:\PROJECTS\4.0800 N-S Transmission Main Phase 2\dwg\4-0800-DETAILS.dwg, 2/2/11

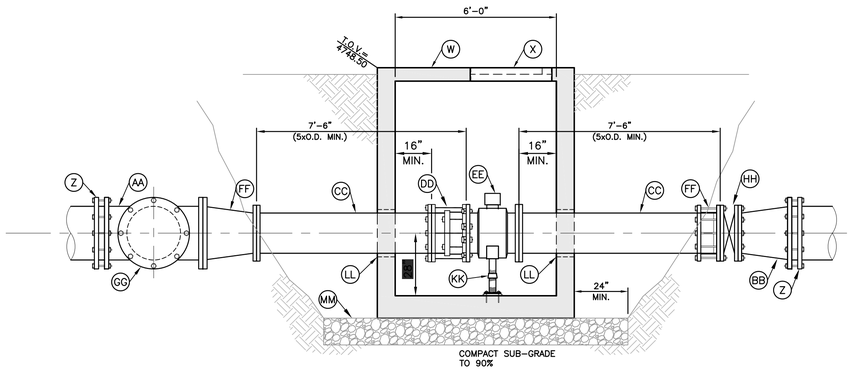

18" FLOW METER VAULT "FM2" (A / C54)
SECTION
SCALE: 3/8"=1'-0"

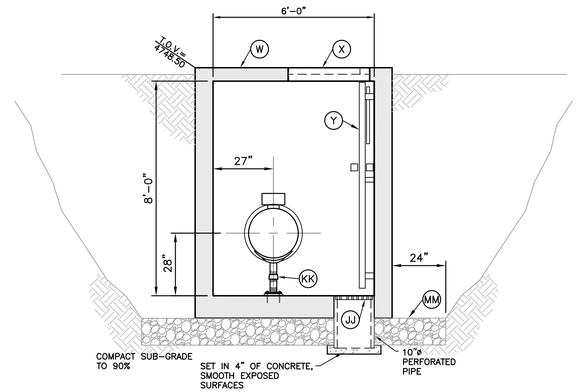

18" FLOW METER VAULT "FM2" (B / C54)
SECTION
SCALE: 3/8"=1'-0"

VAULT EQUIPMENT MATERIAL LIST

ITEM	QTY.	UNIT	DESCRIPTION
A	3	EA	24"x24"x16" Ductile Iron Tee (Flg x Flg)
B	1	EA	24" Ductile Iron Spool, Flg. x Flg. (verify all lengths and clearances before ordering)
C	4	EA	24" PVC C905 DR-25 Spool (With Restrained Joints)
D	1	EA	24" Butterfly Valve (Flg x MJ)
E	5	EA	16" Gate Valve
F	9	EA	16" Ductile Iron Spool, Flg. x P.E. (verify all lengths and clearances before ordering)
G	3	EA	16"x90° Ductile Iron Elbow (Flg xFlg)
H	2	EA	16"x16"x12" Ductile Iron Tee (Flg x Flg)
I	5	EA	16" Romac Flanged Coupling Adaptors (FCA 501)
J	3	EA	16" Romac Dismantling Joint
K	1	EA	16"x24" Flanged Ductile Iron Reducer
L	1	EA	24"x90° Ductile Iron Elbow (Flg xFlg)
M	2	EA	12"x90° Ductile Iron Elbow (Flg xFlg)
N	2	EA	12" Gate Valve
O	1	EA	12" Romac Flanged Coupling Adaptors (FCA 501)
P	2	EA	12" Ductile Iron Spool, Flg. x P.E. (verify all lengths and clearances before ordering)
Q	1	EA	12" Romac Dismantling Joint
R	1	EA	16" Flow Control Valve (FCV1)
S	1	EA	12" Flow Control Valve (FCV2)
T	1	EA	16" Motorized Butterfly Valve
U	1	EA	16" Flow Meter
V	1	EA	10'x14' Pre-cast concrete Vault designed for H-20 traffic Loading
			(All penetrations made in Vault for new pipe require link-seal gaskets.)
W	2	EA	6'x6' Pre-cast concrete Vault designed for H-20 traffic Loading
			(All penetrations made in Vault for new pipe require link-seal gaskets.)
X	3	EA	Bilco 36"x36" Access Hatch, or Equal, With Flush Mounted Locking Hasp
Y	3	EA	16" Galvanized Steel Ladder with "Ladder-up" safety post. Bolt ladder to wall.
Z	9	EA	24" MEGALUG Mechanical Joint Restraint
AA	1	EA	24"x24"x24" Ductile Iron Tee (Flg x Flg)
BB	2	EA	18"x24" Flanged Ductile Iron Reducer
CC	2	EA	18" Ductile Iron Spool, Flg. x P.E. (verify all lengths and clearances before ordering)
DD	1	EA	18" Romac Dismantling Joint
EE	1	EA	18" Flow Meter
FF	1	EA	18" Romac Flanged Coupling Adaptors (FCA 501)
GG	1	EA	24" Blind Flange
HH	1	EA	18" Butterfly Valve (Flg x Flg)
JJ	3	EA	12"x12" Removable Metal Grate
KK	6	EA	Adjustable Pipe Support Bolted to Floor
LL	10	EA	Line Seal (All penetrations made in Vault for new pipe require link-seal gaskets.)
MM	452	SF	12" Thick x 3/4" Drain Rock, Vibra Plated into Place and Extended 24" Beyond Edge of Vault

NOTES:

1. THIS MATERIAL LIST IS FOR GENERAL CONVENIENCE ONLY AND BY NO MEANS SHOULD BE INTERPRETED AS 100% COMPLETE. THE CONTRACTOR IS RESPONSIBLE FOR ALL ITEMS AND QUANTITIES AS SHOWN ON THE PLANS.
2. INSTALL ALL GAUGES AND DIALS 5' ABOVE THE FINISH FLOOR.
3. ALL STL. PLUMBING SHALL BE FUSION EPOXY LINED AND COATED. STEEL IN VAULT SHALL BE PAINTED FEDERAL SAFETY BLUE.
4. ALL PVC WATER PIPELINES ARE TO BE DISINFECTED ACCORDING TO AWWA STANDARD C651 PER NAC 445A.67145 (6)(a) AND PRESSURE TESTED ACCORDING TO AWWA STANDARD C605 PER NAC 445A.67145 (7)(b). WATER STORAGE TANK DISINFECTION SHALL BE IN ACCORDANCE WITH AWWA C652. DISPOSAL OF HEAVILY CHLORINATED WATER MUST BE COORDINATED WITH NDEP WATER POLLUTION CONTROL.
5. CONTRACTOR TO PROVIDE NUT EXTENSIONS FOR ALL BUTTERFLY VALVES TO EXTEND TOP OF NUT TO BETWEEN 18" AND 24" FROM TOP OF VALVE CAN.

DESIGNED BY: DGR/DLO
DRAWN BY: DGR/DLO
CHECKED BY: TLG
DWG NO.: 4-0800-details.dwg
SCALE (HORIZ): 3/8"=1'-0"
SCALE (VERT): N/A
PLOT DATE: 2/2/11

CARSON CITY
PUBLIC WORKS DEPARTMENT
3505 BUTTI WAY CARSON CITY, NEVADA 89701
PH: 887-2355 FAX: 887-2112

PROFESSIONAL ENGINEER - STATE OF NEVADA
THOMAS LEON GUINN
Exp: 6-30-11
CIVIL
No. 18528

REV.	DATE	DESCRIPTION	BY	APP'D

NORTH/SOUTH WATER TRANSMISSION MAIN
PROJECT - PHASE 2
PROJECT No. 4.0800
PRISON HILL
VAULT DETAILS

SHEET C54 OF 96

H:\PROJECTS\4.0800 N-S Transmission Main Phase 2\dwg\4-0800-DETAILS.dwg, 2/2/11

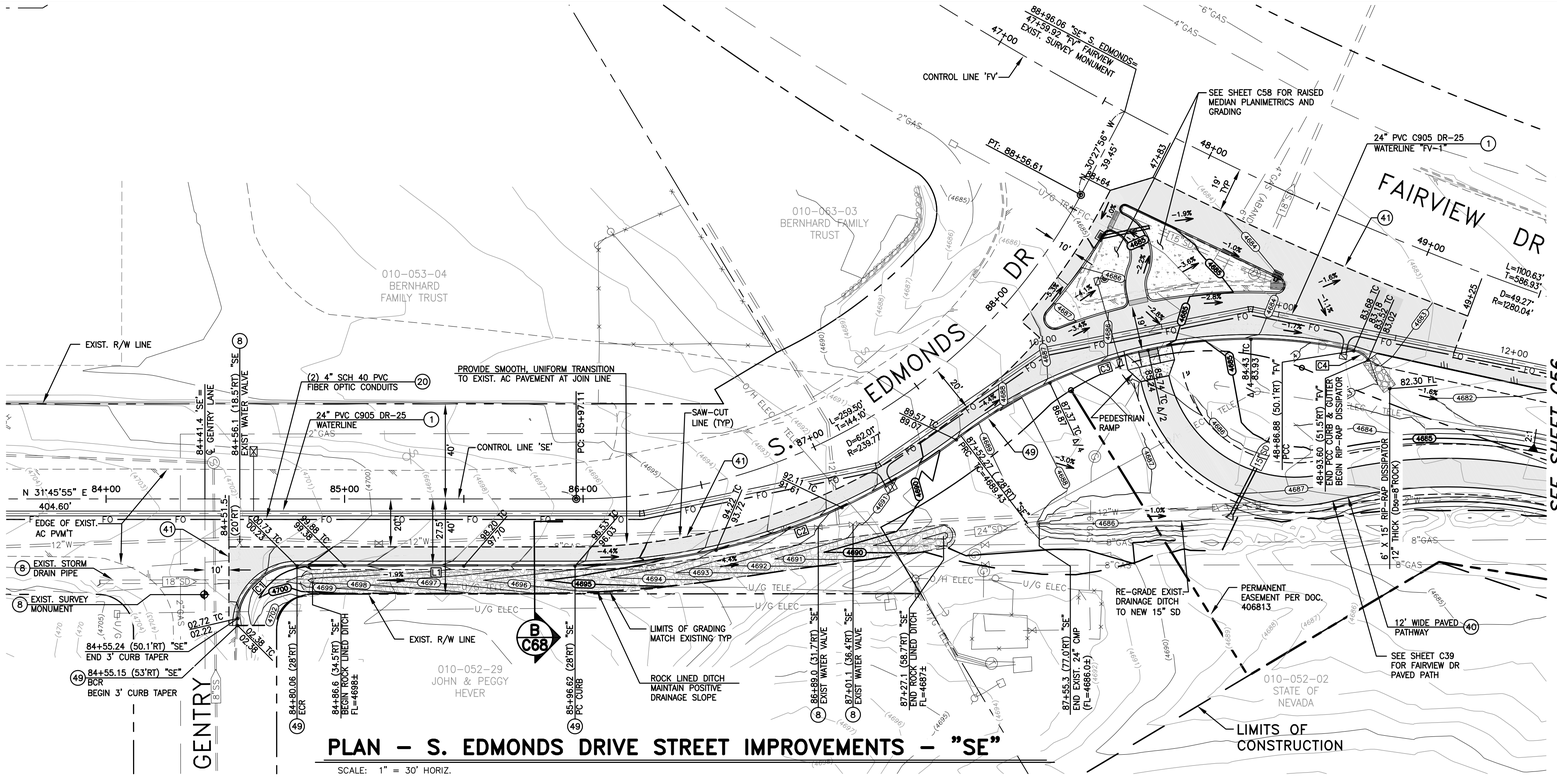

PLAN – S. EDMONDS DRIVE STREET IMPROVEMENTS – "SE"

SCALE: 1" = 30' HORIZ.

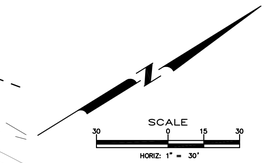

CURB DATA TABLE					
Line & Curve #	Length	Bearing/Delta	Radius	Tangent	Description
C1	39.27'	90°00'00"ᴬ	25.00'	25.00'	PCC CURB & GUTTER TYPE 1
C2	173.84'	37°09'56"ᴬ	268.00'	90.10'	PCC CURB & GUTTER TYPE 1
C3	173.82'	49°47'44"ᴬ	200.00'	92.83'	PCC CURB & GUTTER TYPE 1
C4	7.29'	41°45'31"ᴬ	10.00'	3.81'	PCC CURB & GUTTER TYPE 1
L1	116.56'	S31° 46' 08"W			PCC CURB & GUTTER TYPE 1

NOTE: ALL MEASUREMENTS ARE TO TOP BACK OF CURB

CONSTRUCTION NOTES:

1. INSTALL 24"ø PVC C905, DR-25, 165 PSI WATER MAIN PER MODIFIED STD DRAWING C-1.2.1, MEGALUG RETAINER GLANDS FOR PVC PIPE SHALL BE USED ON ALL FITTINGS, CONTRACTOR TO VERIFY RESTRAINT LENGTH PER MANUFACTURERS RECOMMENDATIONS.
8. PROTECT-IN-PLACE
20. INSTALL TWO 4" DIAMETER, SCH 40, PVC CONDUITS WITH PULL ROPE, PER MODIFIED STD DWG C-1.2.1, LARGE RADIUS (36"R MIN.) SWEEPS ONLY, WHERE REQUIRED.
40. CONSTRUCT 12' WIDE MULTI-USE PATHWAY PER SECTION C, SHEET C68.
41. SAWCUT, REMOVE AND REPLACE EXISTING ASPHALT PER STD DRAWING C-5.1.6.
49. CONSTRUCT PCC CURB & GUTTER TYPE 1 PER STD. DRAWING C-5.1.3.

Call before you Dig
Avoid cutting underground utility lines. It's costly.
Call 811 OR 1-800-227-2600

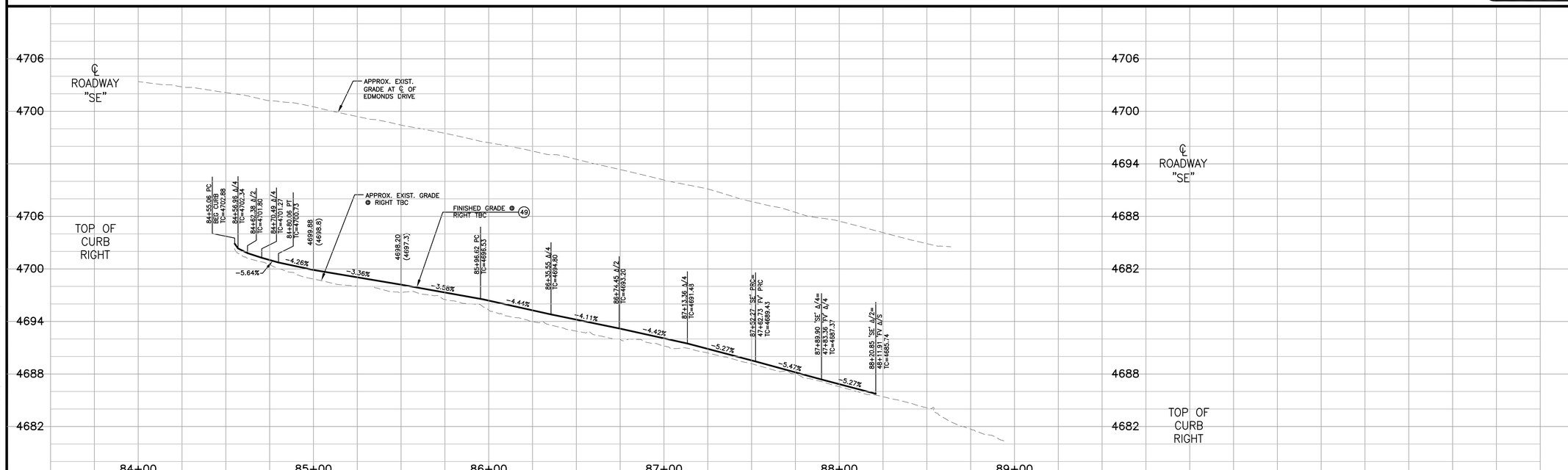

PROFILE – S. EDMONDS DRIVE STREET IMPROVEMENTS – "SE"

SCALE: 1" = 30' HORIZ.
1" = 6' VERT.

DESIGNED BY: DGR/DLO
DRAWN BY: DGR/DLO
CHECKED BY: TLG
DWG NO.: gp-se and fv_pvmt_imp.dwg
SCALE (HORIZ): 1" = 30'
SCALE (VERT): 1" = 3'
PLOT DATE: 2/14/11

CARSON CITY
PUBLIC WORKS DEPARTMENT
3505 BUTTI WAY CARSON CITY, NEVADA 89701
PH: 887-2355 FAX: 887-2112

PROFESSIONAL ENGINEER – STATE OF NEVADA
THOMAS LEON GUINN
Exp: 6-30-11
CIVIL
No. 18528

REV.	DATE	DESCRIPTION	BY	APP'D

NORTH/SOUTH WATER TRANSMISSION MAIN
PROJECT – PHASE 2
PROJECT No. 4.0800
S. EDMONDS DR. STREET IMPROVEMENTS
PLAN & PROFILE
STA 84+00 to STA 89+00

SHEET C55 OF 96

H:\PROJECTS\4.0800 N-S Transmission Main Phase 2\dwg\PP-SE AND FV PVMT IMP.dwg, 2/14/11

CONSTRUCTION NOTES:

1. INSTALL 24"ø PVC C905, DR-25, 165 PSI WATER MAIN PER MODIFIED STD DRAWING C-1.2.1, MEGALUG RETAINER GLANDS FOR PVC PIPE SHALL BE USED ON ALL FITTINGS, CONTRACTOR TO VERIFY RESTRAINT LENGTH PER MANUFACTURERS RECOMMENDATIONS.
8. PROTECT-IN-PLACE
20. INSTALL TWO 4" DIAMETER, SCH 40, PVC CONDUITS WITH PULL ROPE, PER MODIFIED STD DWG C-1.2.1, LARGE RADIUS (36"R MIN.) SWEEPS ONLY, WHERE REQUIRED.
40. CONSTRUCT 12' WIDE MULTI-USE PATHWAY PER SECTION C, SHEET C68.
41. SAWCUT, REMOVE AND REPLACE EXISTING ASPHALT PER STD DRAWING C-5.1.6.
49. CONSTRUCT PCC CURB & GUTTER TYPE 1 PER STD. DRAWING C-5.1.3.
52. RE-GRADE EXISTING ROADWAY SHOULDER PER TYPICAL SECTION A, SHEET C68. PROVIDE FILL MATERIAL WHERE REQUIRED.

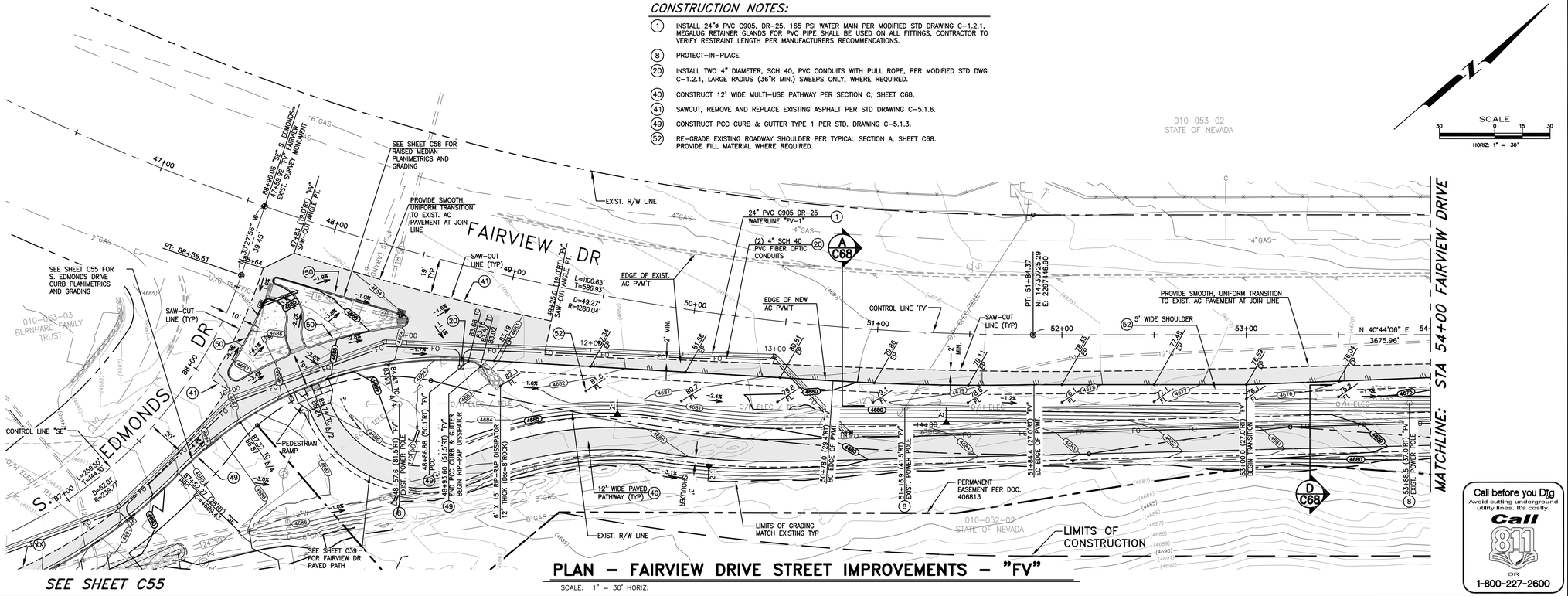

SEE SHEET C55

PLAN – FAIRVIEW DRIVE STREET IMPROVEMENTS – "FV"

SCALE: 1" = 30' HORIZ.

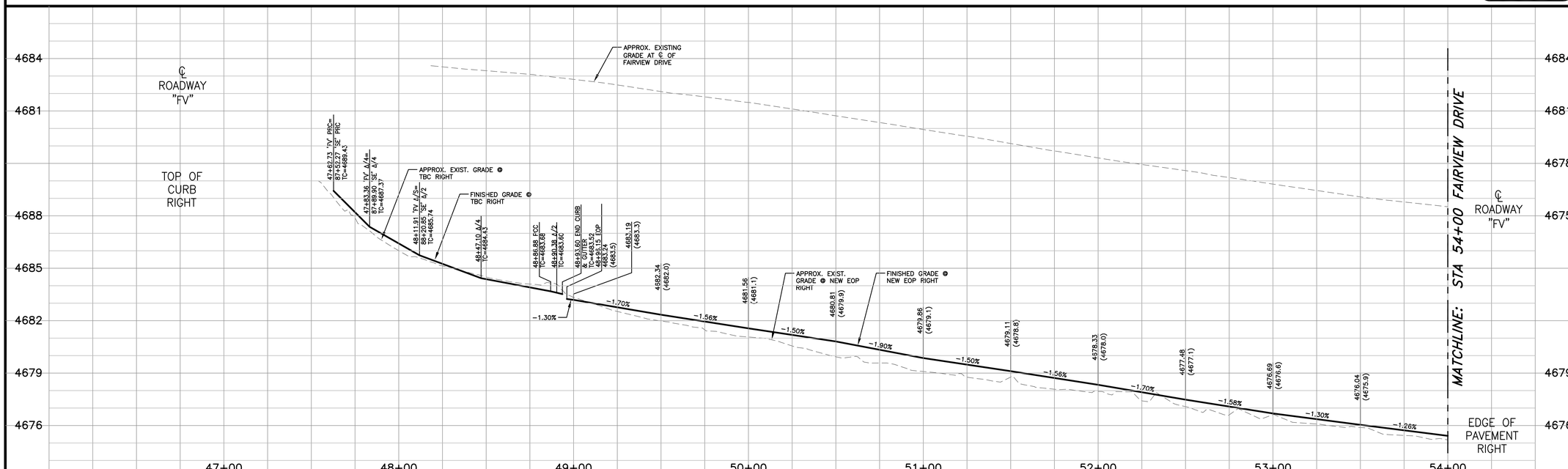

PROFILE – FAIRVIEW DRIVE STREET IMPROVEMENTS – "FV"

SCALE: 1" = 30' HORIZ.
1" = 3' VERT.

DESIGNED BY: DGR/DLO
DRAWN BY: DGR/DLO
CHECKED BY: TLG
DWG NO.: gp-se and fv_pvmt imp.dwg
SCALE (HORIZ): 1" = 30'
SCALE (VERT): 1" = 3'
PLOT DATE: 2/14/11

CARSON CITY
PUBLIC WORKS DEPARTMENT
3505 BUTTI WAY CARSON CITY, NEVADA 89701
PH: 887-2355 FAX: 887-2112

PROFESSIONAL ENGINEER – STATE OF NEVADA
THOMAS LEON GUINN
Exp: 6-30-11
CIVIL
No. 18528

Call before you Dig
Avoid cutting underground utility lines. It's costly.
Call 811 OR 1-800-227-2600

REV.	DATE	DESCRIPTION	BY	APP'D

NORTH/SOUTH WATER TRANSMISSION MAIN
PROJECT – PHASE 2
PROJECT No. 4.0800
FAIRVIEW DR. STREET IMPROVEMENTS
PLAN & PROFILE
STA 47+00 to STA 54+00

SHEET C56 OF 96

H:\PROJECTS\4.0800 N-S Transmission Main Phase 2\dwg\FP-SE AND FV PVMT IMP.dwg, 2/14/11

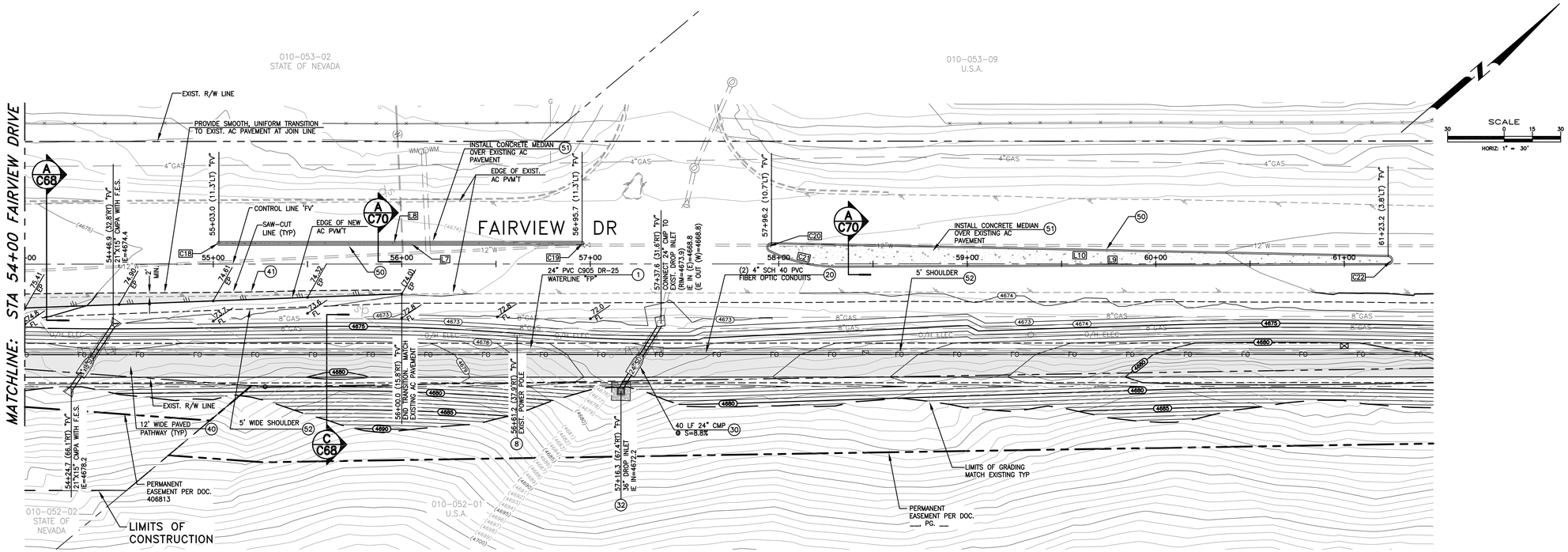

PLAN – FAIRVIEW DRIVE STREET IMPROVEMENTS – "FV"

SCALE: 1" = 30' HORIZ.

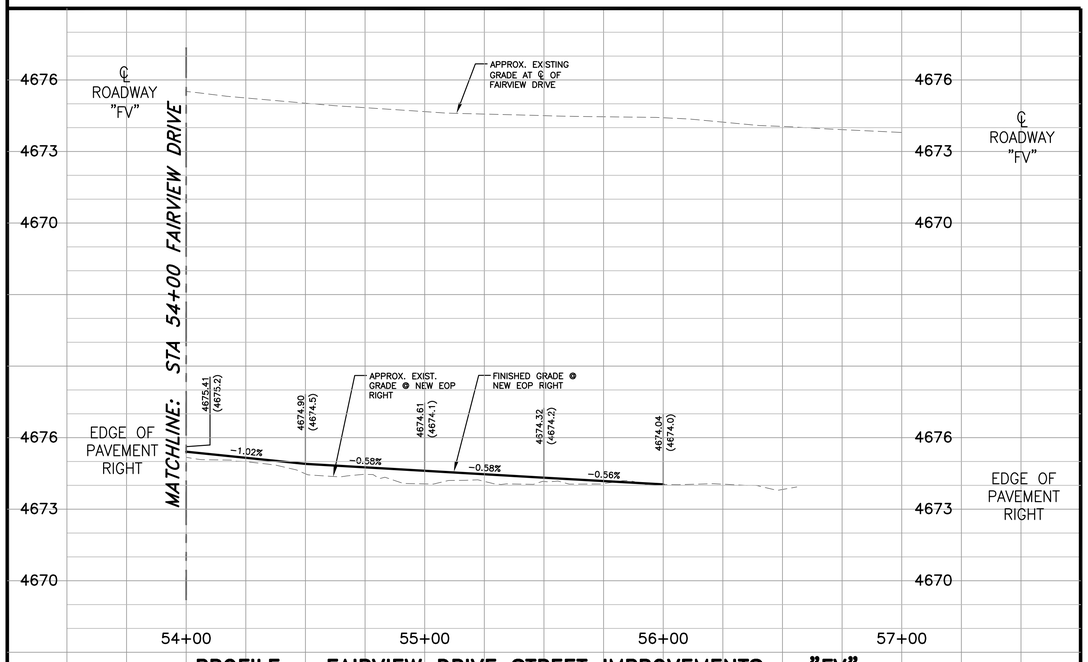

PROFILE – FAIRVIEW DRIVE STREET IMPROVEMENTS – "FV"

SCALE: 1" = 30' HORIZ.
1" = 3' VERT.

SOUTH MEDIAN

CURB DATA TABLE

Line & Curve #	Length	Bearing/Delta	Radius	Tangent	Description
C18	1.07'	180°00'00"ⁿ	0.34'	INFINITY'	TYPE 2 PCC MEDIAN CURB
C19	1.07'	179°59'43"ⁿ	0.34'	8211.32'	TYPE 2 PCC MEDIAN CURB
L7	192.69'	N40° 44' 06"E			TYPE 2 PCC MEDIAN CURB
L8	192.69'	S40° 44' 06"W			TYPE 2 PCC MEDIAN CURB

NOTE: ALL MEASUREMENTS ARE TO TOP BACK OF CURB

NORTH MEDIAN

CURB DATA TABLE

Line & Curve #	Length	Bearing/Delta	Radius	Tangent	Description
C20	4.97'	154°46'57"ⁿ	1.84'	8.23'	TYPE 2 PCC MEDIAN CURB
C21	36.92'	26°39'39"ⁿ	79.34'	18.80'	TYPE 2 PCC MEDIAN CURB
C22	5.73'	178°32'45"ⁿ	1.84'	144.99'	TYPE 2 PCC MEDIAN CURB
L9	292.27'	N40° 29' 38"E			TYPE 2 PCC MEDIAN CURB
L10	327.15'	S41° 56' 13"W			TYPE 2 PCC MEDIAN CURB

NOTE: ALL MEASUREMENTS ARE TO TOP BACK OF CURB

CONSTRUCTION NOTES:

1. INSTALL 24"ø PVC C905, DR-25, 165 PSI WATER MAIN PER MODIFIED STD DRAWING C-1.2.1, MEGALUG RETAINER GLANDS FOR PVC PIPE SHALL BE USED ON ALL FITTINGS, CONTRACTOR TO VERIFY RESTRAINT LENGTH PER MANUFACTURERS RECOMMENDATIONS.
8. PROTECT-IN-PLACE
20. INSTALL TWO 4" DIAMETER, SCH 40, PVC CONDUITS WITH PULL ROPE, PER MODIFIED STD DWG C-1.2.1, LARGE RADIUS (36"R MIN.) SWEEPS ONLY, WHERE REQUIRED.
30. INSTALL STORM DRAIN PIPE PER STD DRAWING C-1.2.1, (SIZE AND CLASS PER PLAN)
32. INSTALL 36"x36" PRE-CAST CONCRETE DROP INLET WITH TRAFFIC RATED PEDESTRIAN FRAME & GRATE PER DETAIL 5, SHEET C65.
40. CONSTRUCT 12' WIDE MULTI-USE PATHWAY PER SECTION C, SHEET C68.
41. SAWCUT, REMOVE AND REPLACE EXISTING ASPHALT PER STD DRAWING C-5.1.6.
50. CONSTRUCT TYPE 1 PCC MEDIAN CURB PER STD. DRAWING C-5.1.5.1.
51. CONSTRUCT CONCRETE MEDIAN INFILL PER TYPICAL SECTION A, SHEET C70.
52. RE-GRADE EXISTING ROADWAY SHOULDER PER TYPICAL SECTION A, SHEET C68. PROVIDE FILL MATERIAL WHERE REQUIRED.

Call before you Dig
Avoid cutting underground utility lines. It's costly.
Call 811 OR 1-800-227-2600

DESIGNED BY: DGR/DLO
DRAWN BY: DGR/DLO
CHECKED BY: TLG
DWG NO.: gp-se and fv_pvmt_tmp.dwg
SCALE (HORIZ): 1" = 30'
SCALE (VERT): 1" = 3'
PLOT DATE: 2/3/11

CARSON CITY
PUBLIC WORKS DEPARTMENT
3505 BUTTI WAY CARSON CITY, NEVADA 89701
PH: 887-2355 FAX: 887-2112

PROFESSIONAL ENGINEER – STATE OF NEVADA
THOMAS LEON GUINN
Exp: 6-30-11
CIVIL
No. 18528

REV.	DATE	DESCRIPTION	BY	APP'D

NORTH/SOUTH WATER TRANSMISSION MAIN
PROJECT – PHASE 2
PROJECT No. 4.0800
FAIRVIEW DR. STREET IMPROVEMENTS
PLAN & PROFILE
STA 54+00 to STA 57+00

SHEET C57 OF 96

H:\PROJECTS\4.0800 N-S Transmission Main Phase 2\dwg\PP-SE AND FV PVMT MP.dwg; 2/3/11

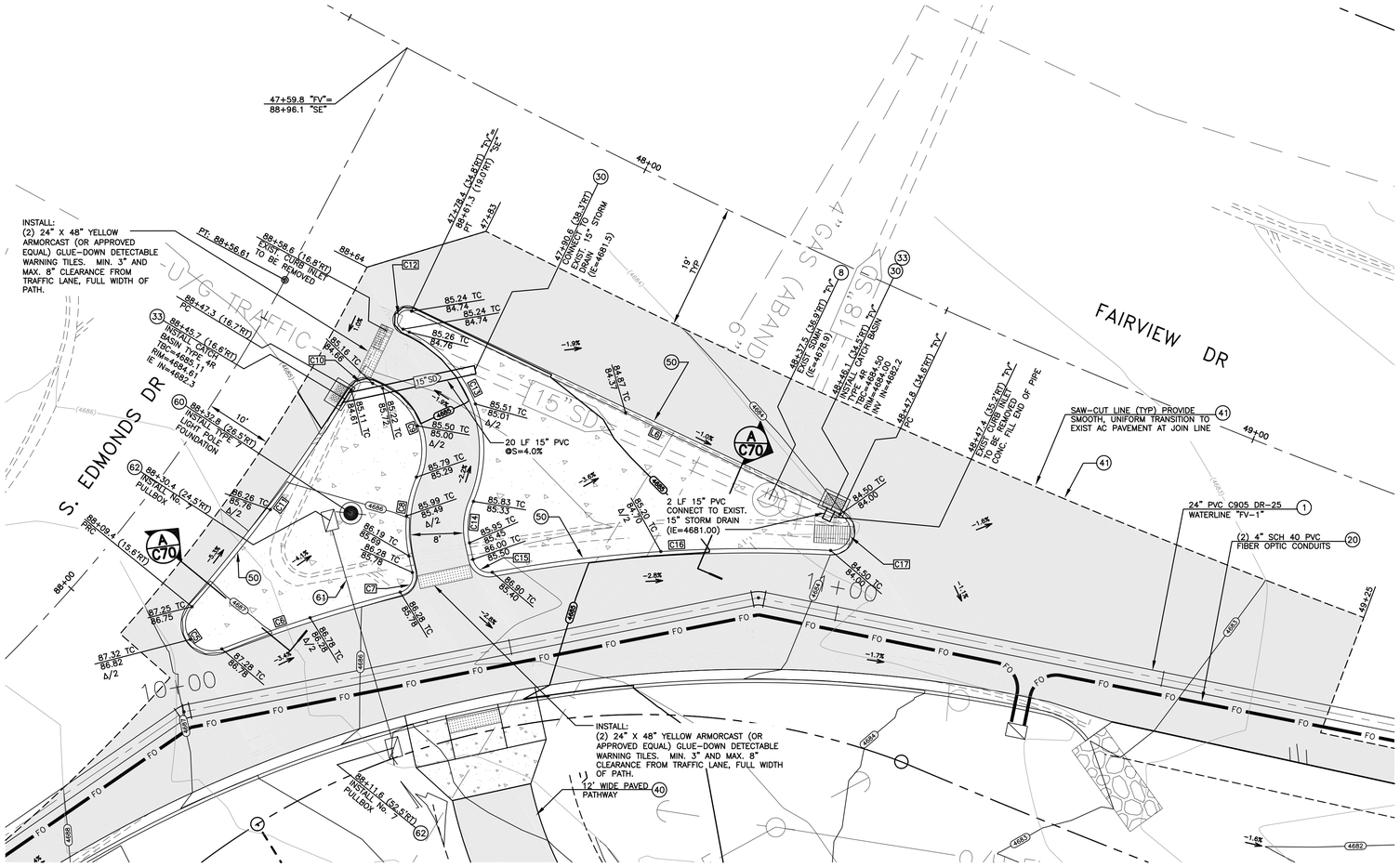

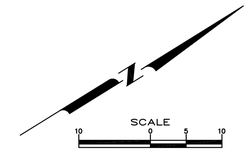

CONSTRUCTION NOTES:

1. INSTALL 24"ø PVC C905, DR-25, 165 PSI WATER MAIN PER MODIFIED STD DRAWING C-1.2.1, MEGALUG RETAINER GLANDS FOR PVC PIPE SHALL BE USED ON ALL FITTINGS, CONTRACTOR TO VERIFY RESTRAINT LENGTH PER MANUFACTURERS RECOMMENDATIONS.
20. INSTALL TWO 4" DIAMETER, SCH 40, PVC CONDUITS WITH PULL ROPE, PER MODIFIED STD DWG C-1.2.1, LARGE RADIUS (36"R MIN.) SWEEPS ONLY, WHERE REQUIRED.
30. INSTALL STORM DRAIN PIPE PER STD DRAWING C-1.2.1, (SIZE AND CLASS PER PLAN)
33. INSTALL CATCH BASIN TYPE 4-R PER STD. DWG C-4.1.5
40. CONSTRUCT 12' WIDE MULTI-USE PATHWAY PER SECTION C, SHEET C68.
41. SAWCUT, REMOVE AND REPLACE EXISTING ASPHALT PER STD DRAWING C-5.1.6.
50. CONSTRUCT TYPE 1 PCC MEDIAN CURB PER STD. DRAWING C-5.1.5.1.
60. INSTALL TYPE 7 LIGHT POLE AND FOUNDATION PER N.D.O.T. STD PLANS T-30.1.9, T-30.1.10, AND T-30.1.16. WITH LED FIXTURE (FULL CUT-OFF LUMINAIRE).
61. INSTALL 4" DIAMETER, SCH 40, PVC CONDUIT WITH PULL ROPE, PER TYPICAL TRENCH SECTION 1, SHEET C71, LARGE RADIUS (36"R MIN.) SWEEPS ONLY.
62. INSTALL No. 7 PULL BOX WITH TRAFFIC RATED, BOLT DOWN, STEEL COVER MARKED "STREET LIGHT" PER DETAIL 2, SHEET C71.

S. EDMONDS AND FAIRVIEW DRIVE RAISED MEDIAN DETAILS

SCALE: 1" = 10' HORIZ.

SOUTH INTERSECTION MEDIAN

CURB DATA TABLE

Line & Curve #	Length	Bearing/Delta	Radius	Tangent	Description
C5	10.64'	152°28'03"~	4.00'	16.33'	TYPE 1 PCC MEDIAN CURB
C6	28.17'	7°19'52"~	220.16'	14.10'	TYPE 1 PCC MEDIAN CURB
C7	3.85'	88°09'26"~	2.50'	2.42'	TYPE 1 PCC MEDIAN CURB
C8	12.09'	35°14'47"~	19.66'	6.25'	TYPE 2 PCC MEDIAN CURB
C9	15.82'	87°38'51"~	10.34'	9.92'	TYPE 2 PCC MEDIAN CURB
C10	3.67'	83°59'58"~	2.50'	2.25'	TYPE 1 PCC MEDIAN CURB
C11	40.53'	9°41'39"~	239.54'	20.31'	TYPE 1 PCC MEDIAN CURB
L2	2.55'	N70° 24' 38"W			TYPE 1 PCC MEDIAN CURB
L3	1.65'	S57° 11' 19"W			TYPE 1 PCC MEDIAN CURB

NOTE: ALL MEASUREMENTS ARE TO TOP BACK OF CURB

NORTH INTERSECTION MEDIAN

CURB DATA TABLE

Line & Curve #	Length	Bearing/Delta	Radius	Tangent	Description
C12	4.71'	180°00'00"~	1.50'	INFINITY'	TYPE 1 PCC MEDIAN CURB
C13	30.07'	87°38'51"~	19.66'	18.87'	TYPE 2 PCC MEDIAN CURB
C14	6.36'	35°14'47"~	10.34'	3.28'	TYPE 2 PCC MEDIAN CURB
C15	3.85'	88°09'26"~	2.50'	2.42'	TYPE 1 PCC MEDIAN CURB
C16	51.09'	13°17'44"~	220.16'	25.66'	TYPE 1 PCC MEDIAN CURB
C17	7.81'	157°32'21"~	2.84'	14.30'	TYPE 1 PCC MEDIAN CURB
L4	1.04'	S57° 11' 19"W			TYPE 1 PCC MEDIAN CURB
L5	2.55'	N70° 24' 38"W			TYPE 1 PCC MEDIAN CURB
L6	71.27'	N57° 11' 19"E			TYPE 1 PCC MEDIAN CURB

NOTE: ALL MEASUREMENTS ARE TO TOP BACK OF CURB

Call before you Dig
Avoid cutting underground utility lines. It's costly.
Call 811 OR 1-800-227-2600

DESIGNED BY: DGR/DLO
DRAWN BY: DGR/DLO
CHECKED BY: TLG
DWG NO.: gp-se and fv. pvmt. imp.dwg
SCALE (HORIZ): 1"=10'
SCALE (VERT): N/A
PLOT DATE: 2/14/11

CARSON CITY
PUBLIC WORKS DEPARTMENT
3505 BUTTI WAY CARSON CITY, NEVADA 89701
PH: 887-2355 FAX: 887-2112

PROFESSIONAL ENGINEER - STATE OF NEVADA
THOMAS LEON GUINN
Exp: 6-30-11
CIVIL
No. 18528

REV.	DATE	DESCRIPTION	BY	APP'D

NORTH/SOUTH WATER TRANSMISSION MAIN
PROJECT - PHASE 2
PROJECT No. 4.0800
S. EDMONDS DR. & FAIRVIEW DRIVE
STREET IMPROVEMENTS
INTERSECTION LAYOUT

H:\PROJECTS\4.0800 N-S Transmission Main Phase 2\dwg\FP-SE AND FV PVMT IMP.dwg, 2/14/11

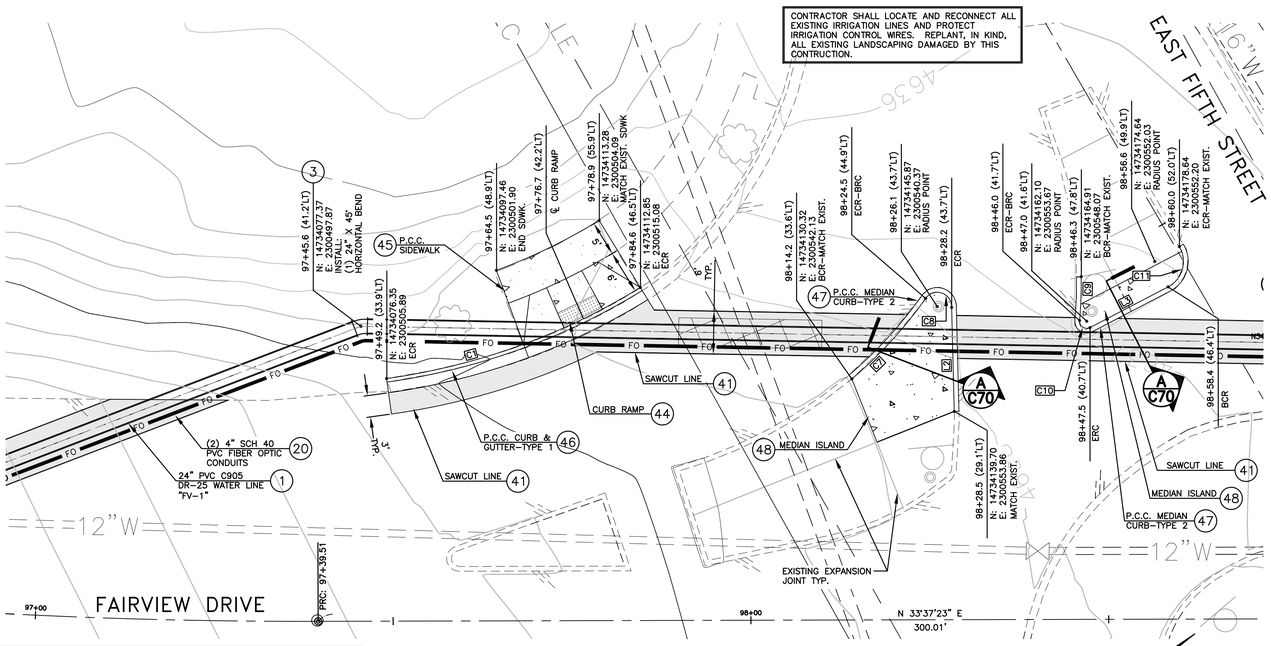

PLANIMETRICS – FAIRVIEW DRIVE & EAST FIFTH STREET SOUTHWEST CORNER & CENTER MEDIANS

SCALE: 1" = 10' HORIZ.

NOTE:

THE CONTRACTOR SHALL TAKE SPECIAL PRECAUTIONS WHEN WORKING ON THE EXISTING PEDESTRIAN PATH ADJACENT TO FAIRVIEW, AS THIS AREA IS HEAVILY USED BY SCHOOL AGE CHILDREN. SAFE ACCESS FOR THESE PEDESTRIANS SHALL BE MAINTAINED ALONG FAIRVIEW. THE EXISTING PEDESTRIAN PATH ALONG FAIRVIEW MAY BE CLOSED FOR NO MORE THAN 2 WEEKS, THEN REOPENED TO ORIGINAL CONDITION FOR SAFE ACCESS. SIGNS SHALL BE POSTED AS PER THE PLANS TO ALERT ALL PEDESTRIANS THAT WORK IS OCCURRING IN THIS AREA AND THAT ALTERNATE ROUTES SHALL BE USED. THESE SIGNS SHALL BE MAINTAINED THROUGH OUT CONSTRUCTION.

SCALE
30 0 15 30
HORIZ: 1" = 30'

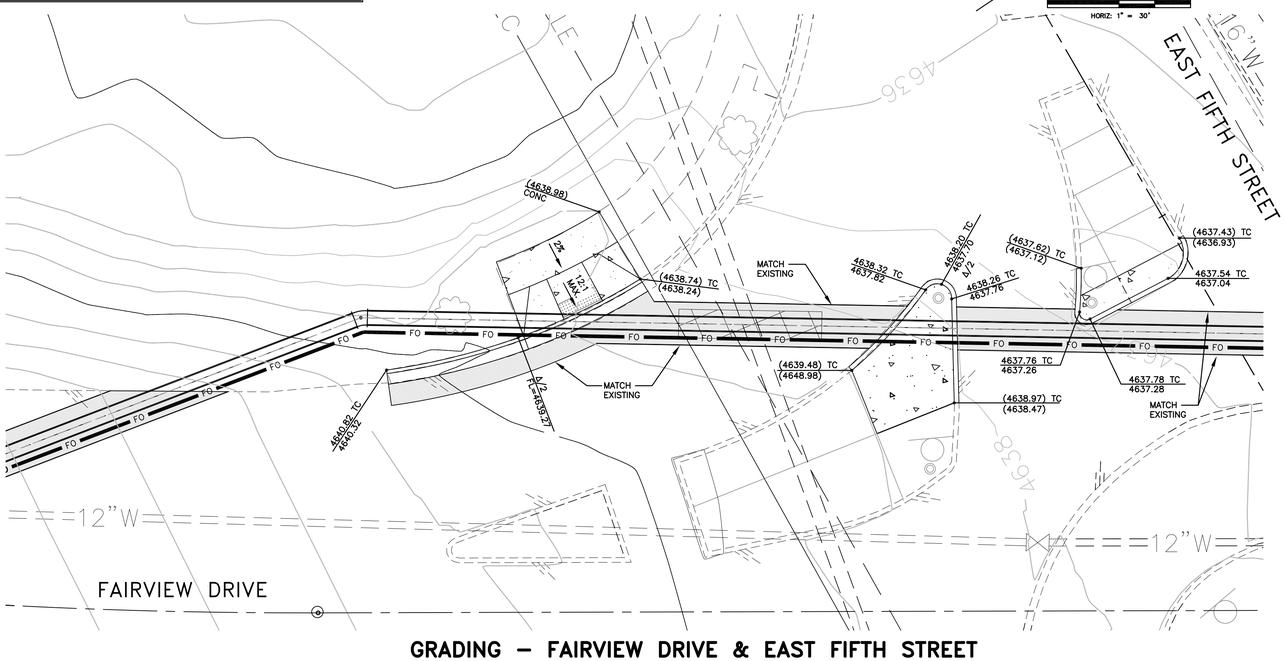

GRADING – FAIRVIEW DRIVE & EAST FIFTH STREET SOUTHWEST CORNER & CENTER MEDIANS

SCALE: 1" = 10' HORIZ.

CURB & GUTTER

CURB DATA TABLE					
Line & Curve #	Length	Bearing/Delta	Radius	Tangent	Description
C1	37.95'	23°38'01"	92.00'	19.25'	PCC CURB & GUTTER TYPE 1
C2	7.04'	4°46'30"	84.50'	3.52'	PCC CURB & GUTTER TYPE 1
C3	2.88'	19°24'47"	8.50'	1.45'	PCC CURB & GUTTER TYPE 1
C4	19.47'	19°44'39"	56.50'	9.83'	PCC CURB & GUTTER TYPE 1
C5	3.03'	20°25'27"	8.50'	1.53'	PCC CURB & GUTTER TYPE 1
C6	20.83'	17°10'15"	69.50'	10.49'	PCC CURB & GUTTER TYPE 1
L1	32.48'	S35° 43' 21"W			PCC CURB & GUTTER TYPE 1

NOTE: ALL MEASUREMENTS ARE TO TOP BACK OF CURB

CENTER MEDIANS

CURB DATA TABLE					
Line & Curve #	Length	Bearing/Delta	Radius	Tangent	Description
C7	15.31'	14°37'05"	60.00'	7.70'	TYPE 2 PCC MEDIAN CURB
C8	5.01'	143°23'27"	2.00'	6.05'	TYPE 2 PCC MEDIAN CURB
C9	6.14'	6°04'09"	58.00'	3.07'	TYPE 2 PCC MEDIAN CURB
C10	2.14'	122°33'56"	1.00'	1.83'	TYPE 2 PCC MEDIAN CURB
C11	6.55'	93°46'15"	4.00'	4.27'	TYPE 2 PCC MEDIAN CURB
L2	14.70'	S57° 39' 44"E			TYPE 2 PCC MEDIAN CURB
L3	12.29'	S6° 14' 35"W			TYPE 2 PCC MEDIAN CURB

NOTE: ALL MEASUREMENTS ARE TO TOP BACK OF CURB

CONSTRUCTION NOTES:

1. INSTALL 24"ø PVC C905, DR-25, 165 PSI WATER MAIN PER MODIFIED STD DRAWING C-1.2.1, MEGALUG RETAINER GLANDS FOR PVC PIPE SHALL BE USED ON ALL FITTINGS, CONTRACTOR TO VERIFY RESTRAINT LENGTH PER MANUFACTURERS RECOMMENDATIONS.
3. INSTALL LINE LOCATION BOX & LID PER STD DRAWING C-1.2.2. AT ALL HORIZONTAL BEND LOCATIONS.
20. INSTALL TWO 4" DIAMETER, SCH 40, PVC CONDUITS WITH PULL ROPE, PER MODIFIED STD DWG C-1.2.1, LARGE RADIUS (36"R MIN.) SWEEPS ONLY, WHERE REQUIRED.
41. SAWCUT, REMOVE AND REPLACE EXISTING ASPHALT PER STD DRAWING C-5.1.6.
44. REMOVE AND REPLACE EXISTING PEDESTRIAN RAMP PER STD DRAWINGS C-5.3.1 AND C5.3.2.
45. REMOVE AND REPLACE EXISTING P.C.C. SIDEWALK PER STD DRAWINGS C-5.1.1, C-5.2.1 AND C-5.2.2.
46. REMOVE AND REPLACE EXISTING P.C.C. CURB AND GUTTER PER STD DRAWING C-5.1.3.
47. REMOVE AND REPLACE EXISTING TYPE 2 P.C.C. MEDIAN CURB PER STD. DRAWING C-5.1.5.1.
48. REMOVE AND REPLACE EXISTING P.C.C. MEDIAN ISLAND TO EXISTING EXPANSION JOINT PER SECTION A, SHEET C70.

Call before you Dig
Avoid cutting underground utility lines. It's costly.
Call 811 OR 1-800-227-2600

DESIGNED BY: DGR/DLO
DRAWN BY: DGR/DLO
CHECKED BY: TLG
DWG NO. pg-fairview p54-60 W94-102.dwg
SCALE (HORIZ): 1" = 10'
SCALE (VERT): N/A
PLOT DATE: 2/3/11

CARSON CITY
PUBLIC WORKS DEPARTMENT
3505 BUTTI WAY CARSON CITY, NEVADA 89701
PH: 887-2355 FAX: 887-2112

PROFESSIONAL ENGINEER – STATE OF NEVADA
THOMAS LEON GUINN
Exp: 6-30-11
CIVIL
No. 18528

REV.	DATE	DESCRIPTION	BY	APP'D

NORTH/SOUTH WATER TRANSMISSION MAIN
PROJECT – PHASE 2
PROJECT No. 4.0800

FAIRVIEW DR & EAST FIFTH ST
SOUTHWEST CORNER INTERSECTION
LAYOUT

SHEET C59 OF 96

H:\PROJECTS\4.0800 N-S Transmission Main Phase 2\dwg\PP-FAIRVIEW P54-60 W94-102.dwg, 2/3/11

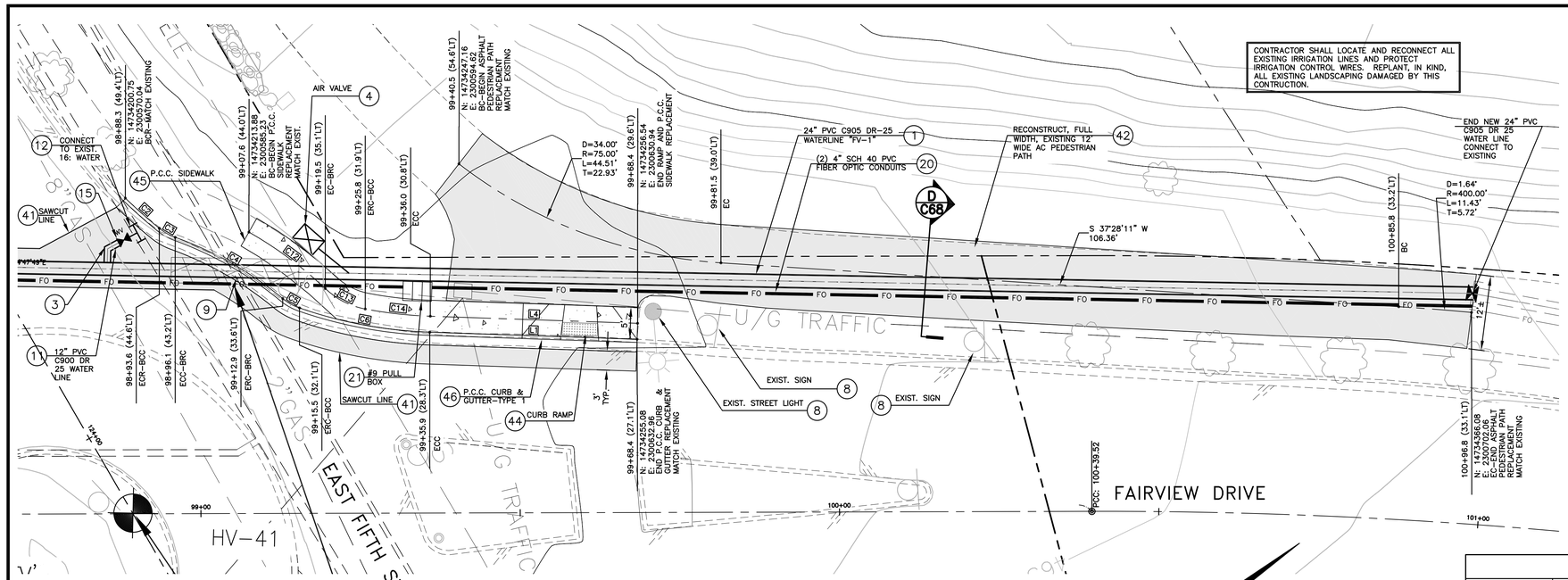

PLANIMETRICS – FAIRVIEW DRIVE & EAST FIFTH STREET NORTHWEST CORNER & PEDESTRIAN PATH

SCALE: 1" = 10' HORIZ.

NOTE:

THE CONTRACTOR SHALL TAKE SPECIAL PRECAUTIONS WHEN WORKING ON THE EXISTING PEDESTRIAN PATH ADJACENT TO FAIRVIEW, AS THIS AREA IS HEAVILY USED BY SCHOOL AGE CHILDREN. SAFE ACCESS FOR THESE PEDESTRIANS SHALL BE MAINTAINED ALONG FAIRVIEW. THE EXISTING PEDESTRIAN PATH ALONG FAIRVIEW MAY BE CLOSED FOR NO MORE THAN 2 WEEKS, THEN REOPENED TO ORIGINAL CONDITION FOR SAFE ACCESS. SIGNS SHALL BE POSTED AS PER THE PLANS TO ALERT ALL PEDESTRIANS THAT WORK IS OCCURRING IN THIS AREA AND THAT ALTERNATE ROUTES SHALL BE USED. THESE SIGNS SHALL BE MAINTAINED THROUGH OUT CONSTRUCTION.

CONCRETE SIDEWALK CENTERLINE

LINE AND CURVE TABLE

Line & Curve #	Length	Bearing/Delta	Radius	Tangent
C12	14.91'	13°46'44"	62.00'	7.49'
C13	7.12'	32°39'17"	12.50'	3.66'
C14	10.26'	8°46'25"	67.00'	5.14'
L4	32.48'	S35° 43' 21"W		

CURB & GUTTER

CURB DATA TABLE

Line & Curve #	Length	Bearing/Delta	Radius	Tangent	Description
C1	37.95'	23°38'01"	92.00'	19.25'	PCC CURB & GUTTER TYPE 1
C2	7.04'	4°46'30"	84.50'	3.52'	PCC CURB & GUTTER TYPE 1
C3	2.88'	19°24'47"	8.50'	1.45'	PCC CURB & GUTTER TYPE 1
C4	19.47'	19°44'39"	56.50'	9.83'	PCC CURB & GUTTER TYPE 1
C5	3.03'	20°25'27"	8.50'	1.53'	PCC CURB & GUTTER TYPE 1
C6	20.83'	17°10'15"	69.50'	10.49'	PCC CURB & GUTTER TYPE 1
L1	32.48'	S35° 43' 21"W			PCC CURB & GUTTER TYPE 1

NOTE: ALL MEASUREMENTS ARE TO TOP BACK OF CURB

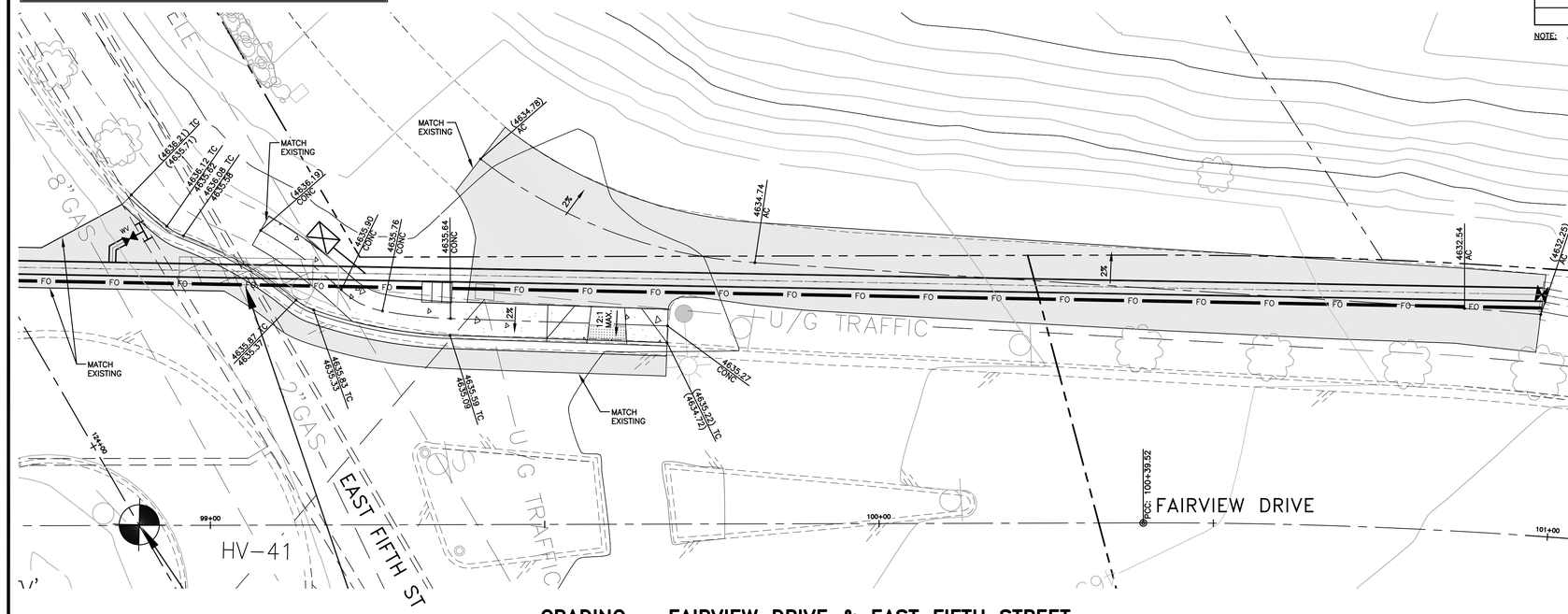

GRADING – FAIRVIEW DRIVE & EAST FIFTH STREET NORTHWEST CORNER & PEDESTRIAN PATH

SCALE: 1" = 10' HORIZ.

CONSTRUCTION NOTES:

1. INSTALL 24"ø PVC C905, DR-25, 165 PSI WATER MAIN PER MODIFIED STD DRAWING C-1.2.1, MEGALUG RETAINER GLANDS FOR PVC PIPE SHALL BE USED ON ALL FITTINGS, CONTRACTOR TO VERIFY RESTRAINT LENGTH PER MANUFACTURERS RECOMMENDATIONS.
3. INSTALL LINE LOCATION BOX & LID PER STD DRAWING C-1.2.2. AT ALL HORIZONTAL BEND LOCATIONS.
4. INSTALL 2" POTABLE WATER AIR RELEASE VALVE PER STD. DRAWING C-3.1.10.
8. PROTECT-IN-PLACE
11. INSTALL PVC C900 CLASS 150 WATER MAIN PER STD. DRAWING C-1.2.1 (SIZE PER PLAN)
12. INSTALL TAPPING SLEEVE PER STD. DRAWINGS C-3.1.1 & C-3.1.3 (SIZE PER PLAN)
15. INSTALL WATER VALVE PER STD. DRAWING C-3.1.4.
20. INSTALL TWO 4" DIAMETER, SCH 40, PVC CONDUITS WITH PULL ROPE, PER MODIFIED STD DWG C-1.2.1, LARGE RADIUS (36"R MIN.) SWEEPS ONLY, WHERE REQUIRED.
21. INSTALL No. 9 PULL BOX WITH TRAFFIC RATED, BOLT DOWN, STEEL COVER MARKED "FIBER OPTIC" PER DETAIL 2, SHEET C71.
41. SAWCUT, REMOVE AND REPLACE EXISTING ASPHALT PER STD DRAWING C-5.1.6.
42. SAWCUT, REMOVE AND REPLACE EXISTING ASPHALT PEDESTRIAN PATH PER SECTION D, SHEET C68.
44. REMOVE AND REPLACE EXISTING PEDESTRIAN RAMP PER STD DRAWINGS C-5.3.1 AND C5.3.2.
46. REMOVE AND REPLACE EXISTING P.C.C. CURB AND GUTTER PER STD DRAWING C-5.1.3.

Call before you Dig
Avoid cutting underground utility lines. It's costly.
Call 811 OR 1-800-227-2600

DESIGNED BY: DGR/DLO
DRAWN BY: DGR/DLO
CHECKED BY: TLG
DWG NO. pg-fairview p54-60 w94-102.dwg
SCALE (HORIZ): 1"=10'
SCALE (VERT): N/A
PLOT DATE: 2/3/11

CARSON CITY
PUBLIC WORKS DEPARTMENT
3505 BUTTI WAY CARSON CITY, NEVADA 89701
PH: 887-2355 FAX: 887-2112

PROFESSIONAL ENGINEER – STATE OF NEVADA
THOMAS LEON GUINN
Exp: 6-30-11
CIVIL
No. 18528

REV.	DATE	DESCRIPTION	BY	APP'D

NORTH/SOUTH WATER TRANSMISSION MAIN
PROJECT – PHASE 2
PROJECT No. 4.0800

FAIRVIEW DR & EAST FIFTH ST
NORTHWEST CORNER INTERSECTION
LAYOUT

SHEET C60 OF 96

H:\PROJECTS\4.0800 N-S Transmission Main Phase 2\dwg\VP-FAIRVIEW P54-60 W94-102.dwg, 2/3/11

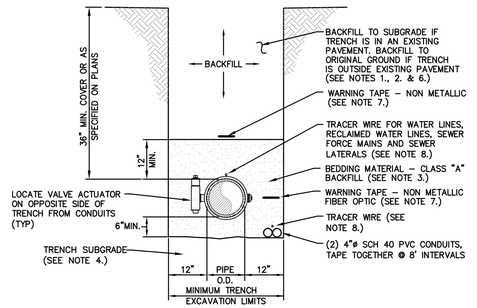

TYPICAL TRENCH SECTION
NTS

NOTES:

1. WATER DENSIFIED BACKFILL AND TUNNELING SHALL BE BY SPECIAL PROVISION ONLY.
2. BACKFILL SHALL CONFORM TO THE REQUIREMENTS OF CLASS E BACKFILL AS SPECIFIED IN SUBSECTION 200.03.06 OF THE SSPWC. MATERIAL SHALL BE PLACED IN LIFT THICKNESS SPECIFIED IN SUBSECTION 305.10 OF THE SSPWC AND DENSIFIED TO 90% RELATIVE COMPACTION.
3. BEDDING SHALL CONFORM TO THE REQUIREMENTS OF CLASS A BACKFILL AS SPECIFIED IN SUBSECTION 200.03.02 OF THE SSPWC. MATERIAL SHALL BE DENSIFIED TO 90% RELATIVE COMPACTION.
4. PLANS SHALL INCLUDE A DETAIL FOR SUBGRADE STABILIZATION INCLUDING BACKFILL MATERIAL, STRUCTURAL GEOTEXTILE FILTER FABRIC AND MODIFIED CUTOFF COLLARS WHEN POTENTIAL FOR UNSTABLE SUBGRADES EXIST, SUBJECT TO THE APPROVAL OF THE CARSON CITY ENGINEER OR PUBLIC WORKS DIRECTOR.
5. FOR TRENCHES IN ROADWAY SECTION, SEE PAVEMENT PATCH DETAIL (DWG. No. C–5.1.5).
6. FOR THE PURPOSE OF PAYMENT; EXCAVATION AND BACKFILL QUANTITIES ARE BASED ON THESE STANDARD DRAWINGS, AND NO ADDITIONAL COMPENSATION WILL BE MADE. SHORING OR SLOPED CUT SLOPES MAY BE NECESSARY, BUT THERE WILL BE NO ADDITIONAL PAYMENT. ALL EXCAVATIONS SHALL CONFORM TO THE LATEST O.S.H.A. REQUIREMENTS.
7. PLACE NON METALLIC WARNING TAPE 1 FOOT ABOVE ALL BURIED PIPES AND CONDUITS.
8. TRACER WIRE SHALL BE 12 GAUGE (MINIMUM THICKNESS) INSULATED SOLID COPPER OR COPPER–CLAD STEEL CORE WIRE. INSULATION SHALL BE 30 MIL HDPE. PLANS SHALL SPECIFY WIRE STRENGTH AND INSULATION THICKNESS FOR BORING APPLICATIONS. SPLICES SHALL BE CONNECTED BY WIRE NUTS, SEALED WITH AQUA SEAL OR SILICON FILLED, AND DOUBLE WRAPPED WITH U/L LISTED ELECTRICAL TAPE. TRACER WIRE COLOR SHALL BE, BLUE FOR WATER, PURPLE FOR RECLAIMED WATER, GREEN FOR SEWER, AND YELLOW FOR ELECTRICAL/FIBER OPTIC.

NO.	REVISION	DATE	STANDARD DETAIL FOR PUBLIC WORKS CONSTRUCTION	SECTION
			TRENCH EXCAVATION AND BACKFILL – MODIFIED	CARSON CITY
				DRAWING NO. C–1.2.1 (305)
APPROVED BY:		7/09		DATE 7/2009

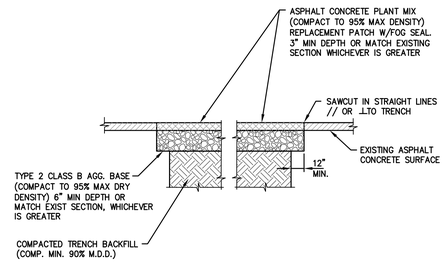

NOTES:

1. IF SAWCUT IS WITHIN 24 INCHES OF EDGE OF A.C. PAVEMENT REMOVE EXISTING PAVEMENT TO THAT EDGE AND REPLACE ENTIRE SECTION.
2. BITUMINOUS MATERIAL SHALL MEET THE REQUIREMENTS OF SECTIONS 201 AND 320 OF THE STANDARD SPECIFICATIONS FOR PUBLIC WORKS CONSTRUCTION.
3. MIXING, SPREADING, AND COMPACTING OF BITUMINOUS PAVEMENT SHALL BE DONE ONLY WHEN THE SURFACE ON WHICH THE MATERIALS ARE TO BE PLACED IS DRY AND WHEN THE ATMOSPHERIC TEMPERATURE IS ABOVE 50 DEGREES FAHRENHEIT AND HAS NOT BEEN BELOW 40 DEGREES FAHRENHEIT DURING THE PRECEDING 24 HOURS.
4. FINISHED SURFACE VARIATIONS SHALL BE 0 TO 0.25 INCHES ABOVE EXISTING SURFACE. ALL HUMPS EXCEEDING THIS TOLERANCE SHALL BE CORRECTED BY REMOVAL OF MATERIAL AND REPLACING IT WITH NEW MATERIAL. FINISHED SURFACE OF PATCH SHALL NOT BE BELOW EXISTING ADJACENT SURFACE.
5. PLANTMIX BITUMINOUS PAVEMENT SURFACE COURSE SHALL BE PG–64–22 TYPE 3 AND SUB SURFACE COURSES SHALL BE PG–64–22 TYPE 3 UNLESS OTHERWISE NOTED.
6. PLANTMIX BITMUMINOUS PAVEMENT PATCHES SHALL MATCH EXISTING SECTION OR HAVE A MINIMUM THICKNESS OF 5 INCHES, WHICHEVER IS GREATER.
7. PLANS SHALL SPECIFY PAVEMENT PATCH AND AGGREGATE BASE DEPTHS AS SPECIFIED BY THE DESIGN ENGINEER.

NO.	REVISION	DATE	STANDARD DETAIL FOR PUBLIC WORKS CONSTRUCTION	SECTION
			PAVEMENT PATCH	CARSON CITY
				DRAWING NO. C–5.1.6
APPROVED BY:		7/09		DATE 7/2009

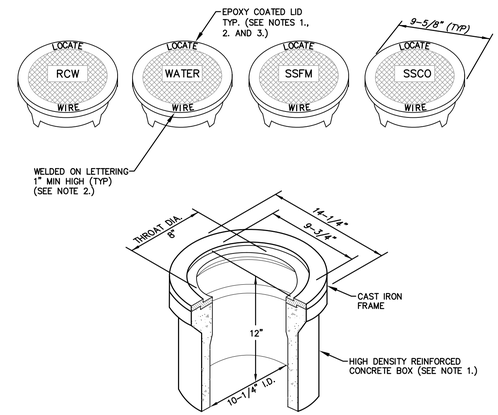

NOTES:

1. BOX AND LID SHALL BE TRAFFIC RATED WITH A MINIMUM INSIDE DIAMETER OF 10 INCHES (CHRISTY G3 TRAFFIC VALVE BOX & LID).
2. CAST IRON LID SHALL BE MARKED AT THE FACTORY "LOCATE WIRE", AND "WATER" FOR WATER APPLICATIONS, "RCW" FOR RECLAIMED WATER APPLICATIONS, "SSFM" FOR SANITARY SEWER FORCE MAIN APPLICATIONS, AND "SSCO" FOR SANITARY SEWER CLEANOUT APPLICATIONS.
3. CAST IRON LID SHALL BE EPOXY COATED AT THE FACTORY, OR POWDER COATED, COLOR SHALL BE BLUE FOR WATER APPLICATIONS, PURPLE FOR RECLAIMED WATER APPLICATIONS AND GREEN FOR SANITARY SEWER APPLICATIONS.
4. BOX SHALL BE SET OR ADJUSTED TO GRADE PER DRAWING NO. C–3.1.4, RISER FOR ADJUSTED BOX SHALL BE PER DRAWING NO. C–3.1.4 FOR OVERLAY ADJUSTMENTS, RISER WILL NOT REQUIRE REPLACEMENT OR EXTENSION IF IT EXTENDS A MINIMUM OF 2 INCHES INTO ADJUSTED BOX.

NO.	REVISION	DATE	STANDARD DETAIL FOR PUBLIC WORKS CONSTRUCTION	SECTION
			LINE LOCATION BOX & LID	CARSON CITY
				DRAWING NO. C–1.2.2 (306,307)
APPROVED BY:		7/09		DATE 7/2009

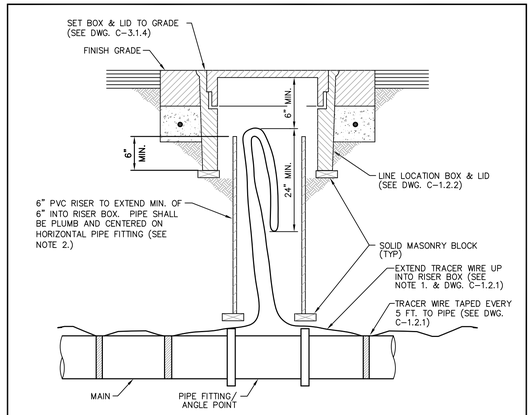

TYPICAL SECTION
NTS

NOTES:

1. WIRE SHALL BE CONTINUOUS IN RISER AND SHALL NOT BE SPLICED WITHIN 10 FEET OF RISER.
2. RISER COLOR SHALL BE BLUE, OR SAME COLOR AS MAIN FOR WATER APPLICATIONS, PURPLE FOR RECLAIMED WATER APPLICATIONS, AND GREEN FOR SANITARY SEWER APPLICATIONS.

NO.	REVISION	DATE	STANDARD DETAIL FOR PUBLIC WORKS CONSTRUCTION	SECTION
			LINE LOCATION RISER	CARSON CITY
				DRAWING NO. C–1.2.3 (203,306)
APPROVED BY:		07/09		DATE 7/2009

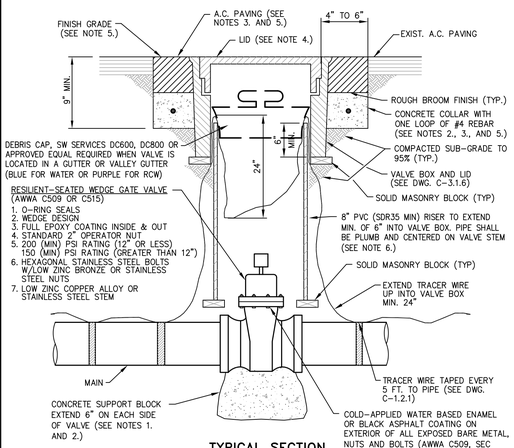

TYPICAL SECTION
NTS

NOTES:

1. SUPPORT BLOCKING SHALL BE POURED AGAINST UNDISTURBED SOIL AND NOT PREVENT ACCESS TO BOLT ASSEMBLY OR VALVE JOINTS.
2. CONCRETE SHALL CONFORM TO THE SSPWC SECTION 337.10. REBAR SHALL ONLY BE USED WHEN THE VALVE BOX IS LOCATED OUTSIDE PAVED AREAS.
3. THE CONCRETE COLLAR SHALL BE LEFT 2 1/2 INCHES – 3 INCHES BELOW FINISHED ASPHALT SURFACE. APPLY AN APPROVED TACK COAT (CONFORMING TO THE SSPWC SECTION 316) AND FILL VOID BETWEEN ADJACENT PAVEMENT AND FRAME WITH TYPE 3 PG 64–22 PAVING (CONFORMING TO THE SSPWC SECTION 320). APPLY FOG SEAL (CONFORMING TO THE SSPWC SECTION 317) TO THE ASPHALT SURFACE. ALL CUTS IN PAVING SHALL BE STRAIGHT AND EVEN. EXCEPTION: WHEN STRUCTURE NOT LOCATED IN ASPHALT PAVEMENT OR IN AN UNPAVED AREA, EXTEND CONCRETE TO FINISH GRADE.
4. LIDS SHALL BE SET FLUSH WITH FINISH GRADE UNLESS OTHERWISE NOTED.
5. WHEN LOCATED IN NDOT RIGHT–OF–WAY, CONCRETE COLLAR SHALL CONFORM TO NDOT STANDARD PLAN SHT R–4.3.3 AND STANDARD SPECIFICATION 609.
6. RISER COLOR SHALL BE BLUE, OR SAME COLOR AS MAIN FOR WATER APPLICATIONS, PURPLE FOR RECLAIMED WATER APPLICATIONS, AND GREEN FOR SANITARY SEWER APPLICATIONS.
7. VALVES ON FIRE LINES SHALL BE UL/FM APPROVED AND MEET ALL APPLICABLE NFPA REQUIREMENTS.

NO.	REVISION	DATE	STANDARD DETAIL FOR PUBLIC WORKS CONSTRUCTION	SECTION
			GATE VALVE	CARSON CITY
				DRAWING NO. C–3.1.4 (203,307)
APPROVED BY:		07/09		DATE 7/2009

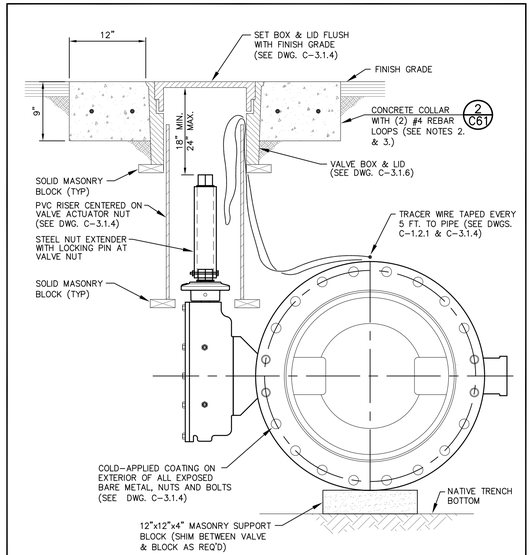

BUTTERFLY VALVE TYPICAL SECTION (FLG X MJ OR FLG X FLG) 1 C61
NTS

REFERENCE STD DWG C–3.1.4 FOR ADDITIONAL NOTES & DETAIL.

NOTES:

1. CONCRETE COLLAR AROUND VALVE BOX SHALL EXTEND TO FINISH GRADE.
2. STAMP CONCRETE COLLAR WITH CARSON CITY SUPPLIED STAMP " 24" MAIN " AS SHOWN ON VALVE BOX COLLAR PLAN.
3. CONCRETE SHALL CONFORM TO THE SSPWC SECTION 337.10

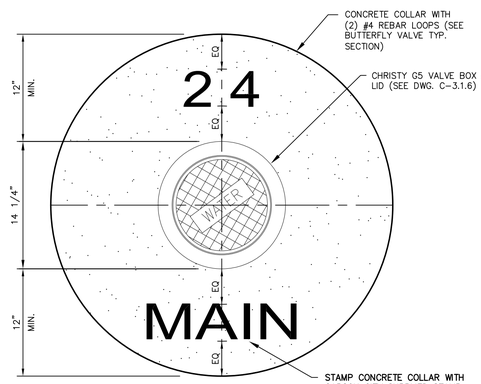

BUTTERFLY VALVE COLLAR PLAN 2 C61
NTS

REFERENCE STD DWG C–3.1.4 FOR ADDITIONAL NOTES & DETAIL.

NOTES:

1. CONCRETE SHALL CONFORM TO THE SSPWC SECTION 337.10

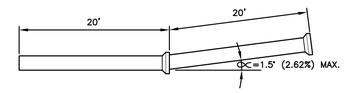

TYPICAL 24" PVC MAX. DEFLECTION
NTS

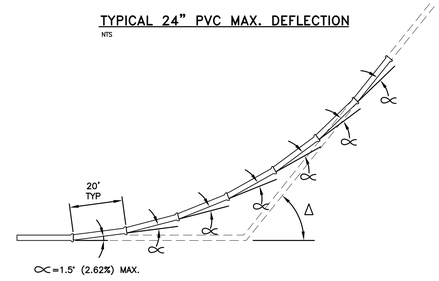

DEFLECTION EQUIVALENT CHART

△	*EQUIVALENT PIPE/APPURTENANCE REQUIRED (MIN.)
0° (0%) – 1.5° (2.62%)	1 EA=20 FT PIPE SEGMENT @ 1.5° MAX.
1.6° (2.79%) – 3° (5.24%)	2 EA=20 FT PIPE SEGMENT @ 1.5° MAX.
3.1° (5.4%) – 4.5° (7.87%)	3 EA=20 FT PIPE SEGMENT @ 1.5° MAX.
9.75° (17.18%) – 12.75° (22.62%)	1 EA=11 1/4" ELBOW
21° (38.38%) – 24° (44.52%)	1 EA=22 1/2° ELBOW
43.5° (94.89%) – 46.5° (105.37%)	1 EA=45° ELBOW

*CONTRACTOR TO USE GOOD CONSTRUCTION PRACTICES IN DETERMINING THE NUMBER OF PIPE SEGMENTS NEEDED TO ACHIEVE GRADE BREAK. THE DEFLECTION EQUIVALENT CHART IS MINIMUMS ONLY.

GRADEBREAK TRANSITION DETAIL 3 C61
NTS

DESIGNED BY: DGR/DLO
DRAWN BY: DGR/DLO
CHECKED BY: TLG
DWG NO.: K:\0800-details.dwg
SCALE (HORIZ): AS NOTED
SCALE (VERT): N/A
PLOT DATE: 3/1/11

CARSON CITY
PUBLIC WORKS DEPARTMENT
3505 BUTTI WAY CARSON CITY, NEVADA 89701
PH: 887–2355 FAX: 887–2112

PROFESSIONAL ENGINEER – STATE OF NEVADA
THOMAS LEON GUINN
Exp: 6–30–11
CIVIL
No. 18528

REV.	DATE	DESCRIPTION	BY	APP'D

NORTH/SOUTH WATER TRANSMISSION MAIN
PROJECT – PHASE 2
PROJECT No. 4.0800
CONSTRUCTION DETAILS
WATER

SHEET C61 OF 96

H:\PROJECTS\4.0800 N–S Transmission Main Phase 2\dwg\4–0800–DETAILS.dwg, 3/1/11

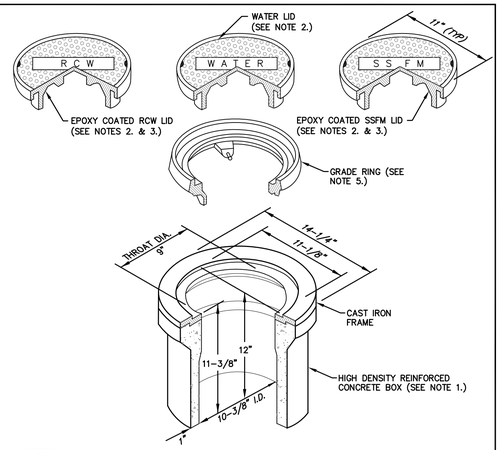

NOTES:

1. VALVE BOX AND LID SHALL BE H20 TRAFFIC RATED WITH A MINIMUM INSIDE DIAMETER OF 10 INCHES (CHRISTY G5 TRAFFIC VALVE BOX & LID).
2. CAST IRON LID SHALL BE MARKED AT THE FACTORY "WATER" FOR WATER APPLICATIONS, "RECLAIMED WATER" OR "RCW" FOR RECLAIMED WATER APPLICATIONS, AND "SS FORCE MAIN" OR "SSFM" FOR SANITARY SEWER APPLICATIONS.
3. FOR RECLAIMED WATER AND SANITARY SEWER APPLICATIONS, CAST IRON LID SHALL BE EPOXY COATED AT THE FACTORY, OR POWDER COATED, COLOR SHALL BE PURPLE FOR RECLAIMED WATER APPLICATIONS AND GREEN FOR SANITARY SEWER APPLICATIONS.
4. VALVE BOX SHALL BE SET OR ADJUSTED TO GRADE PER DRAWING NO. C-3.1.4, RISER FOR ADJUSTED VALVE BOX SHALL BE PER DRAWING NO. C-3.1.4. FOR OVERLAY ADJUSTMENTS, RISER WILL NOT REQUIRE REPLACEMENT OR EXTENSION IF IT EXTENDS A MINIMUM OF 2 INCHES INTO ADJUSTED VALVE BOX.
5. GRADE RING IS NOT ALLOWED FOR NEW VALVE BOX INSTALLATIONS. CAST IRON GRADE RING (CHRISTY G5 GRADE RING) MAY BE USED FOR OVERLAY ADJUSTMENTS WHEN OVERLAY DEPTH EQUALS THE GRADE RING DEPTH. NO MORE THAN ONE GRADE RING ALLOWED PER BOX.

NO.	REVISION	DATE	STANDARD DETAIL FOR PUBLIC WORKS CONSTRUCTION	SECTION CARSON CITY
			VALVE BOX & LID	DRAWING NO. C-3.1.6 (203,306,307)
APPROVED BY:		07/09		DATE 7/2009

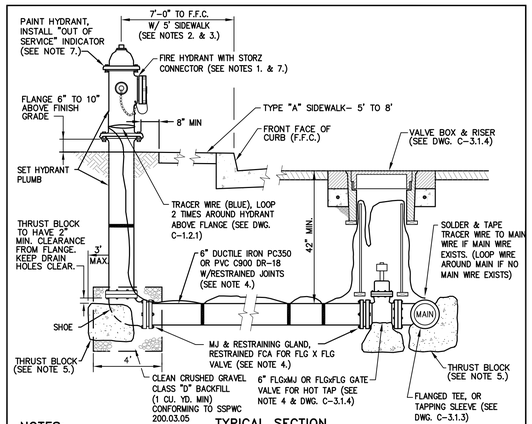

TYPICAL SECTION
NTS

NOTES:

1. FIRE HYDRANTS SHALL BE MUELLER SUPER CENTURION 250 OR WATEROUS 5 1/4 INCH PACER (WB-67-250). ALL HYDRANTS SHALL HAVE HARRINGTON HIHS 5 INCH INTEGRAL HYDRANT STORZ, OR APPROVED EQUAL, WITH BLIND CAP & CABLE AND "OUT OF SERVICE" INDICATOR. OPERATING NUT SHALL BE 1-1/2 INCH PENTAGON. VALVE OPENING SHALL BE 5-1/4 INCHES AND OPEN COUNTER-CLOCKWISE. HYDRANTS SHALL HAVE (2) 2-1/2 INCH HOSE NOZZLES WITH AMERICAN NATIONAL HOSE COUPLING THREADS, (NO SUBSTITUTIONS).
2. HYDRANT SHALL BE INSTALLED SO AS TO PROVIDE CLEARANCE IN ALL DIRECTIONS PER DWG. C-3.1.7.1.
3. FOR 9 FEET-0 INCHES OR WIDER SIDEWALK OR OFFSET SIDEWALK, HYDRANT SHALL BE 2 FEET-0 INCHES TO FRONT FACE OF CURB. IF SIDEWALK IS NOT PRESENT, HYDRANT SHALL BE LOCATED 7 FEET-0 INCHES TO FRONT FACE OF CURB, EXCEPT IN DOWNTOWN AREA.
4. RESTRAINING GLANDS SHALL BE ROMAC GRIPRING PIPE RESTRAINER FOR MECHANICAL JOINT VALVES OR ROMAC RESTRAINED FCA FOR FLANGED VALVES OR APPROVED EQUAL. PIPE RESTRAINT SHALL BE ROMAC "600" SERIES RESTRAINING SYSTEM OR APPROVED EQUAL. RESTRAINING DEVICES SHALL BE FULL CIRCLE (NON POINT) LOADING TYPE. HYDRANT SHOE MAY BE AQUAGRIP, RESTRAINED MECHANICAL JOINT (MJ) OR APPROVED EQUAL.
5. THRUST BLOCKS SHALL HAVE THREE (3) SQUARE FEET MINIMUM AREA AND SHALL BE FORMED AGAINST UNDISTURBED NATIVE OR BACKFILL COMPACTED TO 95%, AND CONFORM TO DWG. C-3.1.14. NO CONCRETE ON HYDRANT DRAIN HOLES OR BOLTS.
6. INSPECTION BY THE CARSON CITY INSPECTOR SHALL BE REQUIRED PRIOR TO BACKFILLING.
7. HYDRANTS SHALL BE PAINTED INTERNATIONAL ORANGE (RUST-OLEUM 7400 HIGH GLOSS ALKYD ENAMEL OR APPROVED EQUAL). DO NOT PAINT 5 INCH STORZ, CAP OR CABLE. RECLAIMED WATER HYDRANTS SHALL BE PAINTED PURPLE. INSTALL "OUT OF SERVICE" INDICATOR COLLAR ON 2-1/2 INCH NOZZLE. INDICATOR SHALL BE HIGHLY VISIBLE, YELLOW WITH BLACK LETTERS, 2-1/2 INCH MINIMUM WIDTH WITH 1 INCH LETTERS STATING "OUT OF SERVICE". INDICATOR SHALL BE "CALPICO" OR EQUAL APPROVED BY THE CARSON CITY ENGINEER OR PUBLIC WORKS DIRECTOR.

NO.	REVISION	DATE	STANDARD DETAIL FOR PUBLIC WORKS CONSTRUCTION	SECTION CARSON CITY
			FIRE HYDRANT ASSEMBLY	DRAWING NO. C-3.1.7 (203,307)
APPROVED BY:		07/09		DATE 7/2009

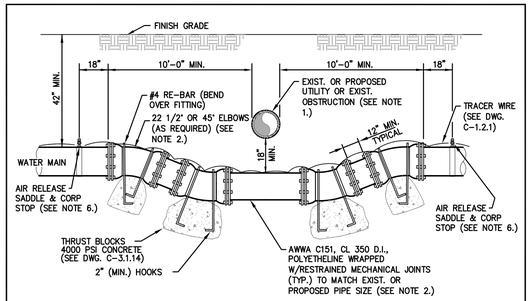

TYPICAL CROSSING DETAIL
NTS

NOTES:

1. ALL POTABLE WATER CROSSINGS OF EXISTING OR PROPOSED UTILITIES, OR OTHER UNDERGROUND OBSTRUCTION SHALL BE DETAILED BY THE DESIGN ENGINEER, AND SHALL MEET THE CRITERIA OUTLINED BY NAC CHAPTER 445A AND THE NDEP BUREAU OF SAFE DRINKING WATER VERTICAL CROSSING CONFLICTS SUMMARY. FOR PURPOSES OF SEPARATION AND PROTECTION OF THE WATER SUPPLY, RECLAIMED WATER SHALL BE CONSIDERED A SEWER LINE. REFER TO DWG C-3.1.2 FOR REQUIRED MITIGATION TO SEWER STORM PIPE LOCATED ABOVE WATER MAIN.
2. THE ENTIRE ASSEMBLY SHALL BE INSTALLED USING DUCTILE IRON RESTRAINED MECHANICAL JOINT FITTINGS.
3. ALL NUTS & BOLTS SHALL BE COATED WITH COLD APPLIED WATER BASED ENAMEL OR BLACK ASPHALT (AWWA C509, SEC 4.2.2.8 OR C515, SEC 4.2.2.6)
4. UPON APPROVAL OF CARSON CITY ENGINEER OR PUBLIC WORKS DIRECTOR, THE ABOVE ASSEMBLY MAY BE REPLACED WITH A WELDED STEEL "SPOOL" OF EQUIVALENT DIAMETER, PRIMED AND WRAPPED (10 MILS MIN.). CONNECT TO EXISTING LINES USING MECHANICAL JOINTS. STEEL SPOOL SHALL BE CONSTRUCTED BY A CERTIFIED WELDER AND PRESSURE CHECKED IN ACCORDANCE WITH SPECIFICATIONS.
5. CONCRETE FOR THRUST BLOCKS SHALL NOT INTERFERE WITH THE REMOVAL OF BOLTED ASSEMBLIES.
6. AN AIR-RELEASE WITH A POSITIVE GRADE FROM MAIN TO RELEASE, SHALL BE INSTALLED ON BOTH SIDES OF CROSSING (18 INCHES MINIMUM FROM ANY FITTING) UNLESS OTHERWISE NOTED ON THE APPROVED PLANS. ONE AIR-RELEASE MAY BE USED WITH ONE LINE TO EACH SIDE OF CROSSING. SEE DWG. C-3.1.10 & C-3.2.2 FOR INSTALLATION.
7. ROUTING WATER LINE OR "ROPING" UNDER SEWER LINE REQUIRES APPROVAL BY CARSON CITY ENGINEER OR PUBLIC WORKS DIRECTOR.

NO.	REVISION	DATE	STANDARD DETAIL FOR PUBLIC WORKS CONSTRUCTION	SECTION CARSON CITY
			LOWERING WATER MAINS	DRAWING NO. C-3.1.8 (203,307)
APPROVED BY:		07/09		DATE 7/2009

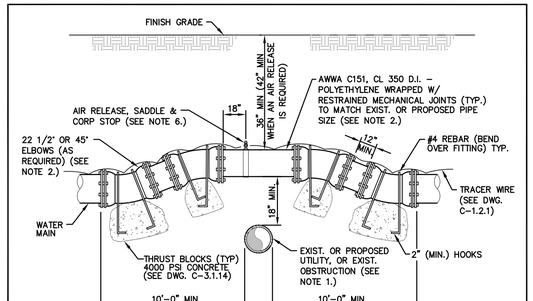

TYPICAL CROSSING DETAIL
NTS

NOTES:

1. ALL POTABLE WATER CROSSINGS OF EXISTING OR PROPOSED UTILITIES, OR OTHER UNDERGROUND OBSTRUCTION SHALL BE DETAILED BY THE DESIGN ENGINEER, AND SHALL MEET THE CRITERIA OUTLINED BY NAC CHAPTER 445A AND THE NDEP BUREAU OF SAFE DRINKING WATER VERTICAL CROSSING CONFLICTS SUMMARY. FOR PURPOSES OF SEPARATION AND PROTECTION OF THE WATER SUPPLY, RECLAIMED WATER SHALL BE CONSIDERED A SEWER LINE.
2. THE ENTIRE ASSEMBLY SHALL BE INSTALLED USING DUCTILE IRON RESTRAINED MECHANICAL JOINT FITTINGS.
3. ALL NUTS & BOLTS SHALL BE COATED WITH COLD APPLIED WATER BASED ENAMEL OR BLACK ASPHALT (AWWA C509, SEC 4.2.2.8 OR C515, SEC 4.2.2.6)
4. UPON APPROVAL OF CARSON CITY ENGINEER OR PUBLIC WORKS DIRECTOR, THE ABOVE ASSEMBLY MAY BE REPLACED WITH A WELDED STEEL "SPOOL" OF EQUIVALENT DIAMETER, PRIMED AND WRAPPED (10 MILS MIN.). CONNECT TO EXISTING LINES USING MECHANICAL JOINTS. STEEL SPOOL SHALL BE CONSTRUCTED BY A CERTIFIED WELDER AND PRESSURE CHECKED IN ACCORDANCE WITH SPECIFICATIONS.
5. CONCRETE FOR THRUST BLOCKS SHALL NOT INTERFERE WITH THE REMOVAL OF BOLTED ASSEMBLIES.
6. AN AIR-RELEASE WITH POSITIVE GRADE FROM MAIN TO RELEASE SHALL BE INSTALLED AT THE HIGH POINT OF THE MAIN (18 INCHES MINIMUM FROM ANY FITTING) UNLESS OTHERWISE NOTED ON THE APPROVED PLANS. SEE DWG. C-3.1.10 FOR INSTALLATION.
7. ROUTING WATER LINE OVER SEWER LINE REQUIRES APPROVAL BY CARSON CITY ENGINEER OR PUBLIC WORKS DIRECTOR.
8. EVERY EFFORT IS TO BE MADE TO KEEP THE WATER MAIN OR WATER LATERAL 18 INCHES ABOVE THE SEWER MAIN AND THE WATER MAIN 12 INCHES ABOVE SEWER LATERAL.

NO.	REVISION	DATE	STANDARD DETAIL FOR PUBLIC WORKS CONSTRUCTION	SECTION CARSON CITY
			RAISING WATER MAINS	DRAWING NO. C-3.1.9 (203,307)
APPROVED BY:		07/09		DATE 7/2009

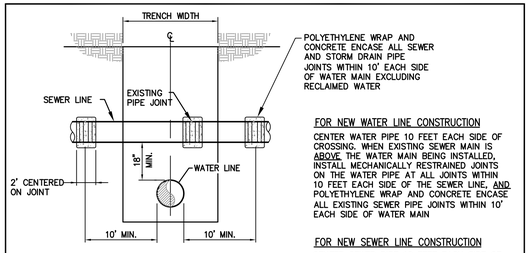

FOR NEW WATER LINE CONSTRUCTION

CENTER WATER PIPE 10 FEET EACH SIDE OF CROSSING. WHEN EXISTING SEWER MAIN IS ABOVE THE WATER MAIN BEING INSTALLED, INSTALL MECHANICALLY RESTRAINED JOINTS ON THE WATER PIPE AT ALL JOINTS WITHIN 10 FEET EACH SIDE OF THE SEWER LINE, AND POLYETHYLENE WRAP AND CONCRETE ENCASE ALL EXISTING SEWER PIPE JOINTS WITHIN 10' EACH SIDE OF WATER MAIN

FOR NEW SEWER LINE CONSTRUCTION

CENTER SEWER PIPE 10 FEET EACH SIDE OF CROSSING. WHEN NEW SEWER LINE IS BEING INSTALLED ABOVE AN EXISTING WATER LINE, SLEEVE SDR 35 MAINS OR USE C900 PIPE FROM MANHOLE TO MANHOLE AND RESTRAIN ALL WATER PIPE CONNECTIONS WITHIN 10 FEET EACH SIDE OF SEWER LINE.

SEWER CROSSING WATER
NTS

"WATER" INCLUDES WATER MAINS AND SERVICE LATERALS
"SEWER" INCLUDES SANITARY SEWER, STORM DRAIN AND RECLAIMED WATER MAINS AND LATERALS.

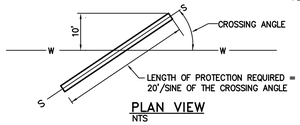

PLAN VIEW
NTS

NOTES:

1. PROVIDE 18 INCHES MINIMUM OF VERTICAL SEPARATION BETWEEN WATER, SEWER AND STORM DRAIN LINES. WHEN SEPARATION CANNOT BE OBTAINED, AND IN CASES WHERE WATER LINES MUST BE ROUTED UNDER EXISTING SEWER OR STORM DRAIN LINES, LOWER WATER MAIN PER STANDARD DETAIL NO. C-3.1.8 OR C-3.1.9
2. WATER AND WASTEWATER LATERALS SHALL BE PE TUBING CONFORMING TO AWWA STANDARD C901-02 AND ASTM D2737.
3. IF WATER LINE IS 18 INCHES OR GREATER ABOVE THE SEWER LINE OR STORM DRAIN LINE, NO SPECIAL CONSTRUCTION IS REQUIRED.
4. ALL PROVISIONS ABOVE SHALL APPLY FOR CROSSINGS TO THE POINT AT WHICH THE 10 FOOT SEPARATION BETWEEN THE WATER AND SEWER OR STORM DRAIN LINE IS ACHIEVED (10 FEET/SINE OF CROSSING ANGLE).
5. FOR PURPOSES OF SEPARATIONS AND PROTECTION OF THE WATER SUPPLY, A RECLAIMED WATER LINE SHALL BE CONSIDERED A SEWER LINE. NO CONCRETE SHALL BE PLACED ON RECLAIMED WATER PIPE JOINTS.
6. ENCASEMENT SLURRY BACKFILL SHALL BE TYPE B (NON-EXCAVATABLE) WITH A MINIMUM COMPRESSIVE STRENGTH AT 28 DAYS OF 3000 (PSI) AND MEET THE REQUIREMENTS OF TABLE 337.08.01-I.

NO.	REVISION	DATE	STANDARD DETAIL FOR PUBLIC WORKS CONSTRUCTION	SECTION CARSON CITY
			WATER CROSSING GRAVITY SANITARY SEWER AND STORM DRAIN	DRAWING NO. C-3.1.2
APPROVED BY:				DATE 4/2009

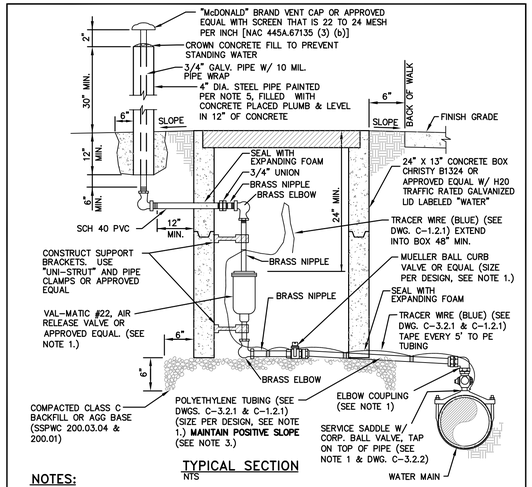

TYPICAL SECTION
NTS

NOTES:

1. SIZE AND PRESSURE CLASS AS INDICATED ON THE PLANS, SHALL BE DETERMINED BY THE DESIGN ENGINEER, MINIMUM SIZE 3/4 INCH. CORP BALL VALVE SHALL BE MUELLER B-20013 OR B-2969, OR FORD FB-500-x WITH MALE I.P. THREADS BOTH ENDS OR APPROVED EQUAL. ELBOW COUPLING SHALL BE MUELLER H-15533 FEMALE I.P. THREAD X CTS 110 COMP, OR FORD L14-xx-Q FEMALE IP THREAD X QUICK JOINT, W/ TUBING LINER OR APPROVED EQUAL.
2. AIR RELEASE VALVES SHALL BE INSTALLED OUTSIDE PAVEMENT SECTION. SLOPE GROUND AWAY FROM AIR RELEASE VALVE BOX OR CONSTRUCT MINIMUM HEIGHT CURBING TO PROTECT FROM FLOODING BY SURFACE WATERS.
3. ALL PIPES SHALL HAVE POSITIVE SLOPE FROM MAIN LINE TO AIR RELEASE VALVE.
4. 1 1/2 INCH TO 2 INCH AIR-RELEASE VALVES REQUIRE A CHRISTY FL36 BOX AND COVER OR APPROVED EQUAL.
5. STEEL PIPE PAINT SHALL BE RUST-OLEUM 7400 HIGH GLOSS SAFETY YELLOW ALKYD ENAMEL OR APPROVED EQUAL.

NO.	REVISION	DATE	STANDARD DETAIL FOR PUBLIC WORKS CONSTRUCTION	SECTION CARSON CITY
			POTABLE WATER AIR RELEASE	DRAWING NO. C-3.1.10 (203,307)
APPROVED BY:		07/09		DATE 7/2009

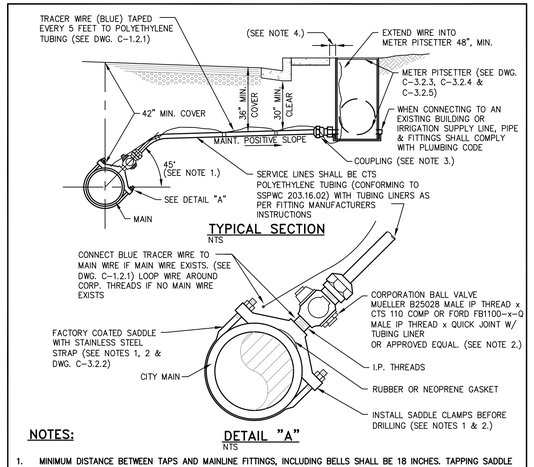

DETAIL "A"
NTS

NOTES:

1. MINIMUM DISTANCE BETWEEN TAPS AND MAINLINE FITTINGS, INCLUDING BELLS SHALL BE 18 INCHES. TAPPING SADDLE MUST BE AT 45 DEGREE ANGLE, EXCEPTIONS MUST BE APPROVED BY CARSON CITY WATER UTILITY.
2. CORPORATION VALVES AND SERVICE SADDLES SHALL CONFORM TO AWWA C800 AND BE NO LESS THAN THE SERVICE LINE SIZE. WHEN REPLACING AN EXISTING SERVICE LINE AND A SIZE LARGER THAN SHOWN IS ENCOUNTERED, THE LARGER SIZE LINE, FITTINGS AND SADDLE SHALL BE INSTALLED UNLESS APPROVED BY CARSON CITY WATER UTILITY.
3. COUPLING FITTING SHALL CONFORM TO AWWA C800 AND BE A MUELLER H-15451 CTS 110 COMP OR FORD C14-xx-Q QUICK JOINT W/ TUBING LINER x FEMALE IP THREAD OR APPROVED EQUAL.
4. METER PITSETTERS TO BE PLACED 4 INCHES FROM BACK OF SIDEWALK IN AREAS WHERE SIDEWALK IS ADJACENT TO CURB, OR 6 INCHES FROM BACK OF CURB IN AREAS WHERE SIDEWALK IS OFFSET FROM CURB, OR AS DIRECTED BY CARSON CITY WATER UTILITY. IN AREAS WHERE NO CURB OR SIDEWALK IS PRESENT, METER PITSETTERS SHALL BE PLACED WITHIN THE RIGHT-OF-WAY AS SHOWN ON THE APPROVED PLANS.
5. DISCONTINUANCE OF USE OF A SERVICE REQUIRES ABANDONMENT OF THE SERVICE. NOTIFY CARSON CITY PUBLIC WORKS FOR METER REMOVAL PRIOR TO PROCEEDING WITH ABANDONMENT. REMOVE EXISTING METER BOX AND EXPOSE CORP STOP AT MAIN FOR SHUT-OFF. ALL PIPING OR TUBING SHALL BE DISCONNECTED FROM CORP AND PLUGGED AT BOTH ENDS. CARSON CITY PUBLIC WORKS SHALL BE NOTIFIED FOR INSPECTION OF CORP ASSEMBLY PRIOR TO BACKFILLING.

NO.	REVISION	DATE	STANDARD DETAIL FOR PUBLIC WORKS CONSTRUCTION	SECTION CARSON CITY
			3/4" TO 2" WATER SERVICE	DRAWING NO. C-3.2.1 (203,307)
APPROVED BY:		07/09		DATE 7/2009

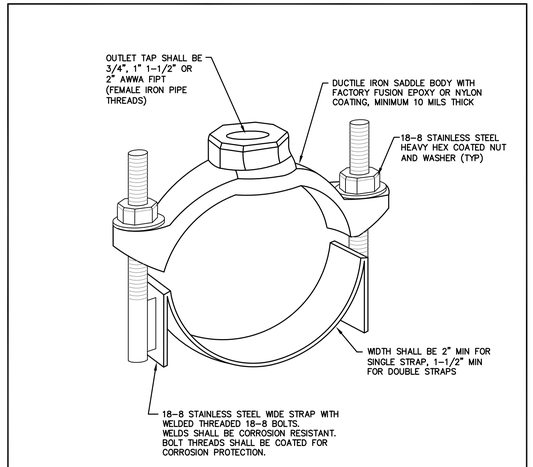

SERVICE SADDLE DETAIL
NTS

NOTES:

1. SERVICE SADDLES FOR 3/4 INCH, 1 INCH, 1-1/2 INCH & 2 INCH TAPS SHALL CONFORM TO AWWA C800 WITH A MINIMUM WORKING PRESSURE OF 150 PSI, UNLESS A HIGHER PRESSURE IS SPECIFIED, AND BE MANUFACTURED BY FORD, MUELLER, ROMAC, SMITH-BLAIR OR APPROVED EQUAL. (SEE DWG. C-3.2.1 FOR ADDITIONAL NOTES AND DETAILS.) POTABLE SERVICE SADDLES SHALL BE IN COMPLIANCE WITH NSF61.
2. SERVICE SADDLES SHALL BE FACTORY COATED DUCTILE IRON (ASTM A395 OR A536) WITH TYPE 18-8 STAINLESS STEEL (304 OR 304L) STRAP(S), BOLTS, NUTS, & WASHERS. ALL STAINLESS STEEL SHALL BE FULLY PASSIVATED.

NO.	REVISION	DATE	STANDARD DETAIL FOR PUBLIC WORKS CONSTRUCTION	SECTION CARSON CITY
			3/4" TO 2" SERVICE SADDLE	DRAWING NO. C-3.2.2 (203, 307)
APPROVED BY:		07/09		DATE 7/2009

DESIGNED BY: DGR/DLO
DRAWN BY: DGR/DLO
CHECKED BY: TLG
DWG NO.: 4-0800-details.dwg
SCALE (HORIZ): AS NOTED
SCALE (VERT): N/A
PLOT DATE: 2/23/11

CARSON CITY
PUBLIC WORKS DEPARTMENT
3505 BUTTI WAY CARSON CITY, NEVADA 89701
PH: 887-2355 FAX: 887-2112

PROFESSIONAL ENGINEER - STATE OF NEVADA
THOMAS LEON GUINN
Exp: 6-30-11
CIVIL
No. 18528

REV.	DATE	DESCRIPTION	BY	APP'D

NORTH/SOUTH WATER TRANSMISSION MAIN
PROJECT - PHASE 2
PROJECT No. 4.0800
CONSTRUCTION DETAILS
WATER

SHEET C62 OF 96

H:\PROJECTS\4.0800 N-S Transmission Main Phase 2\dwg\4-0800-DETAILS.dwg, 2/23/11

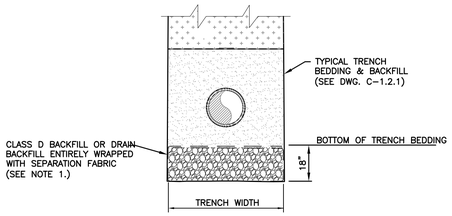

SUBGRADE STABILIZATION DETAIL (1 / C63)

NTS

REFERENCE STD DWG C-1.2.1 FOR ADDITIONAL NOTES & DETAIL

NOTES:

1. FOR SUPPORT UNDER THE BEDDING AND PIPE IN UNSTABLE SOIL CONDITIONS, TYPE "D" BACKFILL OR DRAIN BACKFILL, WITH A SEPARATION FABRIC PLACED ENTIRELY AROUND THE DRAIN BACKFILL, AS SHOWN IN THE STABILIZATION DETAIL, MAY BE USED WITH THE APPROVAL OF THE CONSTRUCTION MANAGER.
2. CLASS "D" BACKFILL OR DRAIN BACKFILL, DOES NOT NEED TO BE WASHED, BUT SHALL BE FREE OF ANY ORGANIC IMPURITIES, CLAY LUMPS OR UNSTABLE SUBSTANCES.

   CLASS "D" BACKFILL OR DRAIN BACKFILL SHALL CONFORM TO THE FOLLOWING REQUIREMENTS.

SIEVE SIZE:	PERCENT PASSING BY MASS:
2 INCH	100
1 1/2 INCH	90–100
3/4 INCH	0–5

3. THE SEPARATION GEOTEXTILE FABRIC SHALL BE A NON-WOVEN FABRIC CONSISTING ONLY OF LONG CHAIN POLYMERIC FILAMENTS. THE FABRIC SHALL BE INERT TO COMMONLY ENCOUNTERED CHEMICALS, RESISTANT TO ROT AND MILDEW, AND SHALL HAVE NO TEARS OR DEFECTS WHICH WILL ADVERSELY AFFECT OR ALTER ITS PHYSICAL PROPERTIES. PHYSICAL PROPERTIES FOR THE FABRIC ARE LISTED BELOW:

PROPERTY	REQUIREMENT	TEST METHOD
GRAB TENSILE STRENGTH, N	625	ASTM D 4632
GRAB ELONGATION AT BREAK, %	45 MIN., 115 MAX.	ASTM D 4632
PUNCTURE STRENGTH, N	220	ASTM D 4833
BURST STRENGTH, MPa	1.45	ASTM D 3786
TRAPEZOIDAL TEAR, N	180	ASTM D 4533
PERMITTIVITY, PER SECOND	0.10 – 0.15	ASTM D 4491
APPARENT OPENING SIZE, SIEVE SIZE, µm	106 – 300	ASTM D 4751
ULTRAVIOLET STABILITY, %	70	ASTM D 4355

TYPE OF FITTING	90° BEND	45° BEND	11 1/4° OR 22 1/2° BEND	TEE OR DEAD END
TYPICAL INSTALLATION	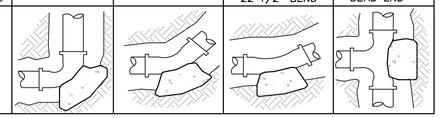			

THRUST BLOCK BEARING AREA (SQ. FT.)

TYPE OF FITTING		90° BEND	45° BEND	11 1/4° OR 22 1/2° BEND	TEE OR DEAD END	TEE W/PLUG	CROSS W/PLUG
SIZE OF PIPE	4"	2	1	1	2	2	2
	6"	4	4	2	4	4	4
	8"	7	4	2	5	7	7
	10"	12	6	3	8	12	12
	12"	16	10	5	12	16	16
	14"	20	12	6	14	20	20
	16"	27	15	8	18	27	27
	18"	45	25	13	32	45	45
	24"	65	35	18	46	65	65

TYPE OF FITTING	CROSS W/PLUG	TEE W/PLUG
TYPICAL INSTALLATION	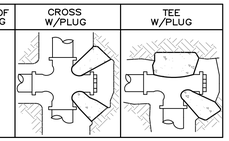	

NOTES:

1. THRUST BLOCKS TO BE CONSTRUCTED OF CONCRETE CONFORMING TO 337.10 OF THE SSPWC AND SHALL HAVE A MINIMUM COMPRESSIVE STRENGTH OF 4000 PSI @ 28 DAYS.
2. AREAS GIVEN ARE FOR CLASS 150 PIPE AT WORKING AND TESTING PRESSURE OF 150 P.S.I., WITH 2000 P.S.F. BEARING CAPACITY. INSTALLATIONS USING DIFFERENT PIPE, TEST PRESSURES, AND/OR SOIL TYPES SHOULD HAVE AREAS ADJUSTED ACCORDINGLY, SUBJECT TO THE APPROVAL OF THE CARSON CITY ENGINEER OR PUBLIC WORKS DIRECTOR.
3. THRUST BLOCKS SHALL BE POURED AGAINST UNDISTURBED SOIL.
4. JOINTS, FLANGES, NUTS, BOLTS AND FACE OF PLUG SHALL BE KEPT CLEAR OF CONCRETE.

NO.	REVISION	DATE	STANDARD DETAIL FOR PUBLIC WORKS CONSTRUCTION	SECTION CARSON CITY
			THRUST BLOCKS	DRAWING NO. C-3.1.14
APPROVED BY:		07/09		DATE 7/2009

RESTRAINT LENGTH CALCULATION ASSUMPTIONS:

- SOIL TYPE = PER GEOTECHNICAL REPORT
- SOIL COVER = PER PLAN
- RUN LENGTH = 20'
- FACTOR OF SAFETY = 1.5
- TRENCH = 90% COMPACTION (#5)
- TEST PRESSURE = 250 PSI

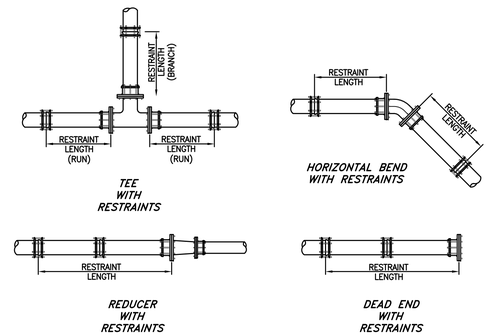

NOTES:

1. DEAD END AND VALVE HAVE THE SAME RESTRAINT LENGTH
2. RESTRAINING GLANDS SHALL BE FACTORY COATED DUCTILE IRON (ASTM A536-80), WITH 304 STAINLESS STEEL BOLTS, NUTS & WASHERS.
3. INSTALL MEGALUG RETAINER GLANDS FOR USE WITH C-905 PVC PIPE TO LIMITS SHOWN ON PLANS, PER MANUFACTURER'S RECOMMENDATIONS. FUSEABLE C-905 PVC PIPE MAY BE USED IN LIEU OF RESTRAINED JOINTS.

PVC RESTRAINT LENGTH CALCULATION DETAIL (2 / C63)

NOT TO SCALE

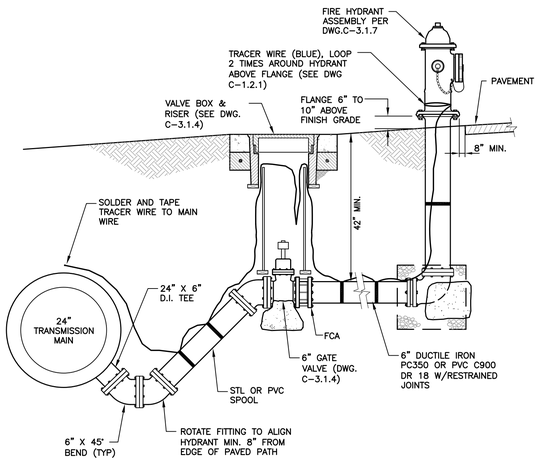

NOTE:

1. ALL CONNECTIONS SHALL USE 304 STAINLESS STEEL BOLTS, NUTS & WASHERS.

FLUSH ASSEMBLY DETAIL (3 / C63)

NOT TO SCALE

MATERIAL SPECIFICATIONS

SHELL: 304 STAINLESS STEEL

LUGS: 304 STAINLESS STEEL

BOLTS, WASHERS AND NUTS: NC ROLLED THREAD 304 STAINLESS STEEL, 5/8" DIAMETER.

GASKETS: VIRGIN SBR COMPOUNDED FOR WATER SERVICE. ASTM D2000-80MA 4AA607 FULL GASKET. 360° PIPE COVERAGE 150 PSI MIN. WORKING PRESSURE.

FLANGE: 304 STAINLESS STEEL OR HIGH TENSILE DUCTILE (NODULAR) IRON, ASTM A536-80, GRADE 65-45-12.

NOM. FLANGE	A	B	C	NO. BOLTS
4	4"	5-1/32"	16"	10
6*	4-1/2"	7-1/32"	16"	10
8*	4"	9-1/32"	20"	14
10	5-1/2"	11-1/32"	24"	16
12**	6-1/2"	13-1/32"	30"	30

*TAPPING SLEEVES IN THE 24" NOMINAL PIPE SIZE RANGE WITH 6" OR 8" FLANGES ARE 24" LONG (C-DIMENSION) AND HAVE 24" BOLTS.

**TAPPING SLEEVES IN THE 12" & 14" NOMINAL PIPE SIZE RANGE W/ 12" FLANGE ARE 24" LONG AND HAVE 24 BOLTS.

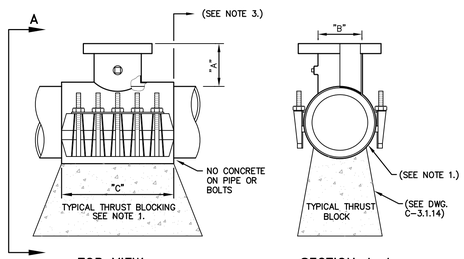

TOP VIEW
NTS

SECTION A–A
NTS

NOTES:

1. MATERIAL USED FOR THRUST BLOCKING SHALL NOT PREVENT ACCESS TO THE BOLT ASSEMBLY.
2. POTABLE WATER HOT TAPS GREATER THAN 2 INCHES AND LESS THAN 14 INCHES SHALL BE PERFORMED BY CARSON CITY WATER UTILITY.
3. MINIMUM DISTANCE BETWEEN TAP SADDLE, COLLARS, JOINTS, SERVICE TAPS, ETC. SHALL BE 18 INCHES CLEAR.
4. SADDLE TO BE HYDROSTATICALLY PRESSURE TESTED BY THE CONTRACTOR, TO 150 PSI (MIN.) FOR A MINIMUM OF 5 MINUTES, WITNESSED BY CARSON CITY WATER UTILITY, PRIOR TO PERFORMING TAP.
5. REFERENCE "WATER GENERAL NOTES" DWG. C-3.1.1, FOR HOT-TAP SCHEDULING INFORMATION.

NO.	REVISION	DATE	STANDARD DETAIL FOR PUBLIC WORKS CONSTRUCTION	SECTION CARSON CITY
			TAPPING SLEEVE	DRAWING NO. C-3.1.3 (203,307)
APPROVED BY:		07/09		DATE 7/2009

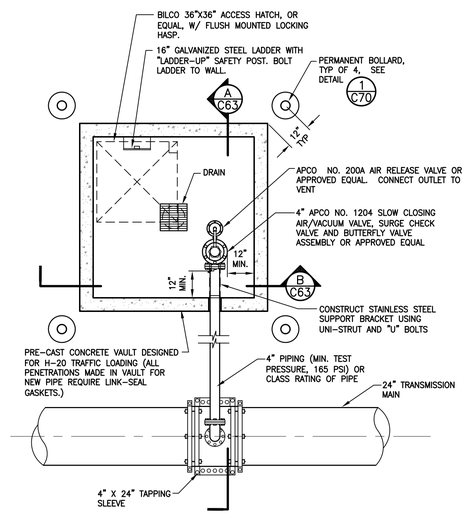

PLAN VIEW

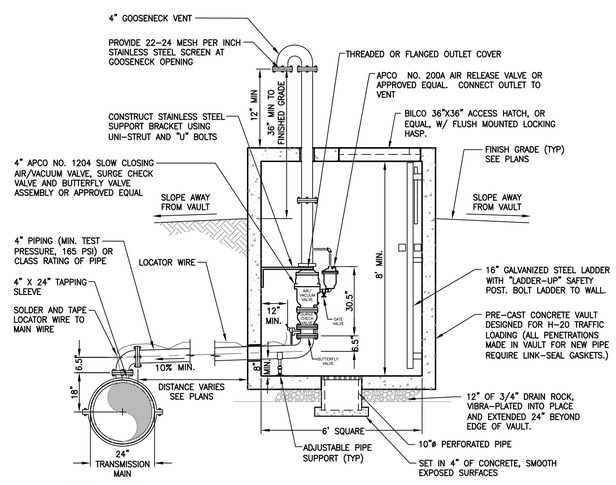

GENERAL NOTES

1. AIR RELEASE VALVES SHALL BE INSTALLED OUTSIDE PAVEMENT SECTION.
2. SLOPE GROUND AWAY FROM VALVE BOX OR CONSTRUCT CURBING TO PROTECT FROM FLOODING BY SURFACE WATERS.
3. ALL PIPES SHALL HAVE POSITIVE SLOPE OF 10% MIN. FROM MAIN LINE TO AIR RELEASE VALVE.

VAULT SECTION (A / C63)

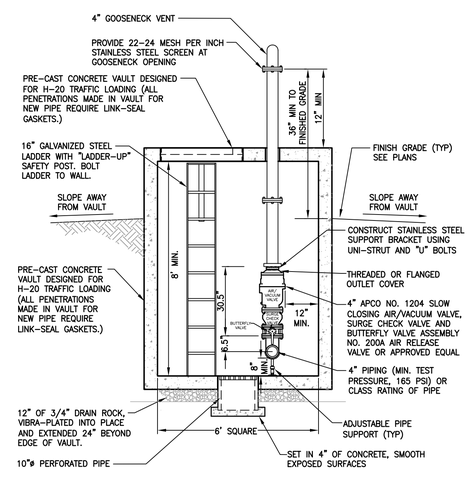

VAULT SECTION (B / C63)

SLOW CLOSING AIR/VACUUM VALVE W/AIR RELEASE DETAIL (4 / C63)

SCALE: 3/8"=1'-0"

DESIGNED BY: DGR/DLO
DRAWN BY: DGR/DLO
CHECKED BY: TLG
DWG NO.: F:\0800-details.dwg
SCALE (HORIZ): AS NOTED
SCALE (VERT): N/A
PLOT DATE: 2/14/11

CARSON CITY PUBLIC WORKS DEPARTMENT
3505 BUTTI WAY CARSON CITY, NEVADA 89701
PH: 887-2355 FAX: 887-2112

PROFESSIONAL ENGINEER – STATE OF NEVADA
THOMAS LEON GUINN
Exp: 6-30-11
CIVIL
No. 18528

REV.	DATE	DESCRIPTION	BY	APP'D

NORTH/SOUTH WATER TRANSMISSION MAIN PROJECT – PHASE 2
PROJECT No. 4.0800
CONSTRUCTION DETAILS
WATER

SHEET C63 OF 96

H:\PROJECTS\4.0800 N-S Transmission Main Phase 2\dwg\4-0800-DETAILS.dwg, 2/14/11

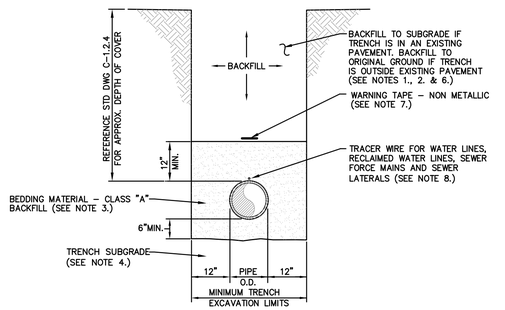

TYPICAL TRENCH SECTION
NTS

NOTES:

1. WATER DENSIFIED BACKFILL AND TUNNELING SHALL BE BY SPECIAL PROVISION ONLY.
2. BACKFILL SHALL CONFORM TO THE REQUIREMENTS OF CLASS E BACKFILL AS SPECIFIED IN SUBSECTION 200.03.06 OF THE SSPWC. MATERIAL SHALL BE PLACED IN LIFT THICKNESS SPECIFIED IN SUBSECTION 305.10 OF THE SSPWC AND DENSIFIED TO 90% RELATIVE COMPACTION.
3. BEDDING SHALL CONFORM TO THE REQUIREMENTS OF CLASS A BACKFILL AS SPECIFIED IN SUBSECTION 200.03.02 OF THE SSPWC. MATERIAL SHALL BE DENSIFIED TO 90% RELATIVE COMPACTION.
4. PLANS SHALL INCLUDE A DETAIL FOR SUBGRADE STABILIZATION INCLUDING BACKFILL MATERIAL, STRUCTURAL GEOTEXTILE FILTER FABRIC AND MODIFIED CUTOFF COLLARS WHEN POTENTIAL FOR UNSTABLE SUBGRADES EXIST, SUBJECT TO THE APPROVAL OF THE CARSON CITY ENGINEER OR PUBLIC WORKS DIRECTOR.
5. FOR TRENCHES IN ROADWAY SECTION, SEE PAVEMENT PATCH DETAIL (DWG. No. C–5.1.6).
6. FOR THE PURPOSE OF PAYMENT; EXCAVATION AND BACKFILL QUANTITIES ARE BASED ON THESE STANDARD DRAWINGS, AND NO ADDITIONAL COMPENSATION WILL BE MADE. SHORING OR SLOPED CUT SLOPES MAY BE NECESSARY, BUT THERE WILL BE NO ADDITIONAL PAYMENT. ALL EXCAVATIONS SHALL CONFORM TO THE LATEST O.S.H.A. REQUIREMENTS.
7. PLACE NON METALLIC WARNING TAPE 1 FOOT ABOVE ALL BURIED PIPES AND CONDUITS.
8. TRACER WIRE SHALL BE 12 GAUGE (MINIMUM THICKNESS) INSULATED SOLID COPPER OR COPPER–CLAD STEEL CORE WIRE. INSULATION SHALL BE 30 MIL HDPE. PLANS SHALL SPECIFY WIRE STRENGTH AND INSULATION THICKNESS FOR BORING APPLICATIONS. SPLICES SHALL BE CONNECTED BY WIRE NUTS, SEALED WITH AQUA SEAL OR SILICON FILLED, AND DOUBLE WRAPPED WITH U/L LISTED ELECTRICAL TAPE. TRACER WIRE COLOR SHALL BE, BLUE FOR WATER, PURPLE FOR RECLAIMED WATER, AND GREEN FOR SEWER.
9. REFERENCE TRENCH EXCAVATION AND BACKFILL–MODIFIED, (STD. DWG. No. C–1.2.1, SHEET C61) FOR TYPICAL WATER MAIN TRENCH SECTION

NO.	REVISION	DATE	STANDARD DETAIL FOR PUBLIC WORKS CONSTRUCTION	SECTION
			TRENCH EXCAVATION AND BACKFILL	CARSON CITY
				DRAWING NO. C–2.1.1 (305)
APPROVED BY:		7/09		DATE 7/2009

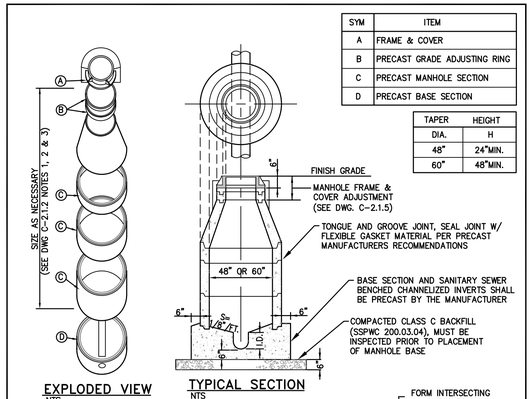

SYM	ITEM
A	FRAME & COVER
B	PRECAST GRADE ADJUSTING RING
C	PRECAST MANHOLE SECTION
D	PRECAST BASE SECTION

TAPER	HEIGHT
DIA.	H
48"	24"MIN.
60"	48"MIN.

EXPLODED VIEW
NTS

TYPICAL SECTION
NTS

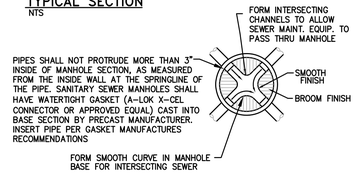

PLAN VIEW–BASE
NTS

NO.	REVISION	DATE	STANDARD DETAIL FOR PUBLIC WORKS CONSTRUCTION	SECTION
			MANHOLE TYPE 1	CARSON CITY
				DRAWING NO. C–2.1.3 (204, 306)
APPROVED BY:		07/09		DATE 7/2009

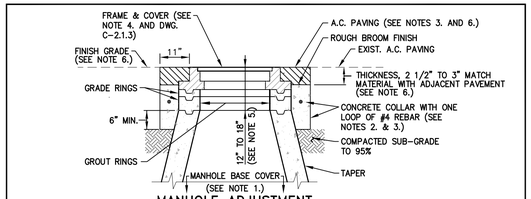

MANHOLE ADJUSTMENT
TYPICAL SECTION
NTS

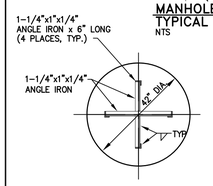

SECTION A–A
NTS

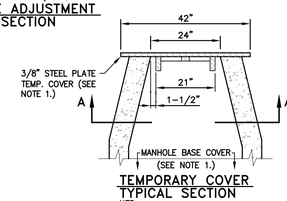

TEMPORARY COVER
TYPICAL SECTION
NTS

NOTES:

1. INSTALL TEMPORARY COVER WITH CONE INSTALLATION WHEN INSTALLING NEW MANHOLE OR PRIOR TO REMOVING EXISTING FRAME & COVER AND GRADE RINGS TO ADJUST TO FINISH GRADE. INSTALL COVER OVER MANHOLE BASE TO PREVENT DEBRIS FROM ENTERING SEWER SYSTEM. THE MANHOLE BASE COVER SHALL BE IN PLACE PRIOR TO PERFORMING ANY ADJUSTMENTS OR GROUTING AND SHALL REMAIN IN PLACE WHILE ADJUSTMENTS OR GROUTING ARE BEING PERFORMED. REMOVE BASE COVER UPON ADJUSTMENT APPROVAL BY CARSON CITY.
2. CONCRETE SHALL CONFORM TO THE SSPWC SECTION 202.01.12. REBAR SHALL BE USED ONLY WHEN THE MANHOLE IS LOCATED OUTSIDE PAVED AREAS.
3. THE CONCRETE COLLAR SHALL BE LEFT 2 1/2 INCHES TO 3 INCHES BELOW FINISHED ASPHALT SURFACE. APPLY AN APPROVED TACK COAT (CONFORMING TO THE SSPWC SECTION 316) AND FILL VOID BETWEEN ADJACENT PAVEMENT AND FRAME WITH TYPE 3 AC 20 PAVING (CONFORMING TO THE SSPWC SECTION 320). APPLY FOG SEAL (CONFORMING TO SSPWC SECTION 317) TO THE ASPHALT SURFACE. ALL CUTS IN PAVING SHALL BE STRAIGHT AND EVEN. EXCEPTION: WHEN STRUCTURE NOT LOCATED IN ASPHALT PAVEMENT OR LOCATED IN AN UNPAVED AREA, EXTEND CONCRETE TO FINISH GRADE.
4. INSTALL NEW FRAME & COVER UNLESS OTHERWISE SHOWN ON THE PLANS OR SPECIAL CONDITIONS. FRAME & COVER SHALL BE SET FLUSH WITH FINISH GRADE UNLESS OTHERWISE NOTED.
5. FOR NEW MANHOLE INSTALLATIONS, DISTANCE FROM COVER TO CONE SHALL BE 12 INCHES MINIMUM AND 15 INCHES MAXIMUM FOR MINOR RESIDENTIAL STREETS AND 15 INCHES MINIMUM AND 18 INCHES MAXIMUM FOR ALL OTHER STREETS. FOR ADJUSTING EXISTING FRAME & COVERS THE DISTANCE FROM COVER TO CONE SHALL NOT EXCEED 18 INCHES.
6. WHEN LOCATED IN NDOT RIGHT–OF–WAY, CONCRETE COLLAR SHALL CONFORM TO NDOT STANDARD PLAN SHT R–4.7.3 AND STANDARD SPECIFICATION 609.

NO.	REVISION	DATE	STANDARD DETAIL FOR PUBLIC WORKS CONSTRUCTION	SECTION
			MANHOLE FRAME & COVER ADJUSTMENT	CARSON CITY
				DRAWING NO. C–2.1.5 (204, 323)
APPROVED BY:		7/09		DATE 7/2009

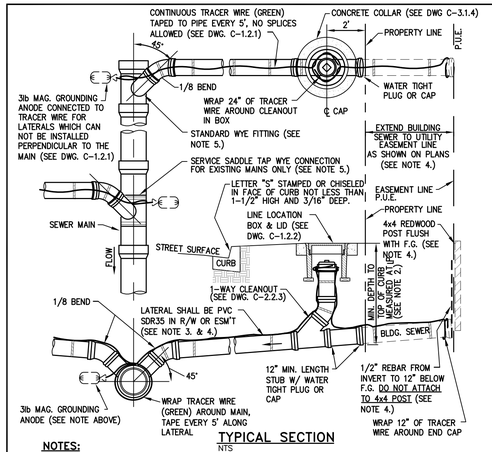

TYPICAL SECTION
NTS

NOTES:

1. IN NO CASE SHALL A LATERAL CONNECT TO THE SEWER MAIN DIRECTLY ON TOP OR MATCH THE FLOWLINE OF THE PIPE.
2. SEWER LATERALS SHALL HAVE A MINIMUM SLOPE OF 2%. PLANS SHALL INDICATE INVERT ELEV. REQUIRED TO SERVE PROPERTY AND CLEAR UNDERGROUND OBSTRUCTIONS.
3. ALL JOINTS ON SEWER LATERAL PIPE WITHIN THE RIGHT–OF–WAY SHALL BE COMPRESSION TYPE. C900 PVC MAY BE SUBSTITUTED FOR SDR35 TO MEET NDEP BSDW SEPARATIONS.
4. LATERAL SHALL BE PERPENDICULAR TO THE MAIN AND EXTEND TO PROPERTY LINE. WHEN SHOWN ON PLANS TO INSTALL BUILDING SEWER PRIOR TO PUBLIC UTILITIES, INSTALLATION OF BUILDING SEWER IS EXTENDED TO UTILITY EASEMENT LINE AND STANDARD WATERTIGHT PLUG OR CAP, REDWOOD POST AND REBAR SHALL BE INSTALLED AT EASEMENT LINE.
5. USE OF SEWER SERVICE TAP SADDLE CONNECTIONS SHALL NOT BE ALLOWED FOR NEW SEWER MAIN CONSTRUCTION. WHEN A TAP SADDLE CONNECTION IS TO BE USED ON AN EXISTING SEWER MAIN, IT SHALL BE A WYE SADDLE AND BE INSTALLED PER DWG. C–2.2.2.
6. DISCONTINUANCE OF USE OF AN EXISTING SEWER LATERAL REQUIRES ABANDONMENT OF THE LATERAL. CUT, REMOVE 1 FOOT OF EXISTING LATERAL AND CAP BOTH ENDS OF THE EXISTING SEWER LATERAL TO BE ABANDONED WITHIN 6 INCHES OF THE SEWER MAIN. INSPECTION BY CARSON CITY SEWER UTILITY IS REQUIRED PRIOR TO BACKFILL.
7. PROPERTY OWNER SHALL BE RESPONSIBLE FOR OPERATION, MAINTENANCE AND REPAIR OF THE SEWER LATERAL WITHIN THE PUBLIC RIGHT–OF–WAY PER CCMC 12.05.050.5.

NO.	REVISION	DATE	STANDARD DETAIL FOR PUBLIC WORKS CONSTRUCTION	SECTION
			SEWER LATERAL	CARSON CITY
				DRAWING NO. C–2.2.1 (203,306)
APPROVED BY:		07/09		DATE 7/2009

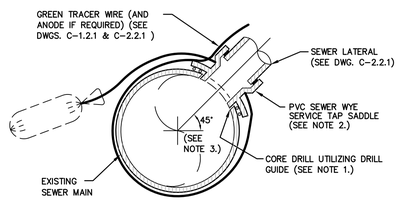

SECTION A–A
NTS

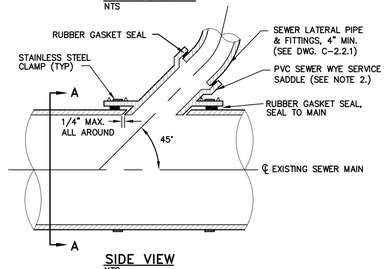

SIDE VIEW
NTS

NOTES:

1. EXISTING SEWER MAINS SHALL BE CORE DRILLED UTILIZING A DRILL GUIDE FOR A WYE SADDLE AND A CORE DRILL WITH A LENGTH EXCEEDING THE LATERAL DIAMETER, INSERT–A–DRILL IDY75 & EXTRA LONG HOLE SAW OR APPROVED EQUAL. DIAMOND CORE BITS SHALL BE USED ON NON–PVC MAINS.
2. SERVICE TAP SADDLES SHALL BE PVC SEWER WYE SADDLES. FERNCO WYE TAP SADDLES WITH PRESSURE KIT OR APPROVED EQUAL MAY BE USED ON EXISTING SEWER MAINS ONLY WHEN MAIN IS NOT PVC.
3. SADDLES SHALL BE INSTALLED AT 45 DEGREES TO MAIN AS SHOWN IN SECTION A–A. IN NO CASE SHALL A LATERAL CONNECTING TO THE EXISTING SEWER MAIN BE LOCATED DIRECTLY ON TOP OF THE PIPE, NOR SHALL IT MATCH THE FLOWLINE OF THE PIPE.

NO.	REVISION	DATE	STANDARD DETAIL FOR PUBLIC WORKS CONSTRUCTION	SECTION
			SEWER SERVICE TAP SADDLE	CARSON CITY
				DRAWING NO. C–2.2.2 (203,306)
APPROVED BY:		7/09		DATE 7/2009

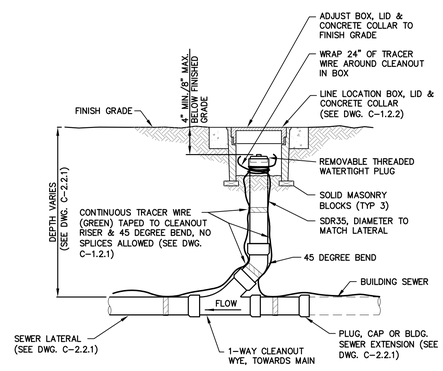

TYPICAL SECTION
NTS

NO.	REVISION	DATE	STANDARD DETAIL FOR PUBLIC WORKS CONSTRUCTION	SECTION
			SEWER CLEANOUT	CARSON CITY
				DRAWING NO. C–2.2.3 (203,306)
APPROVED BY:		07/09		DATE 7/2009

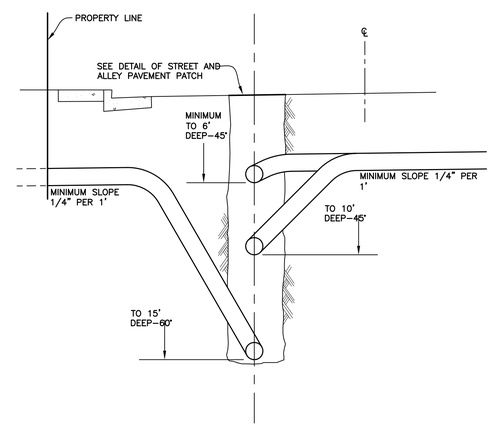

NO.	REVISION	DATE	STANDARD DETAILS FOR PUBLIC WORKS CONSTRUCTION	SECTION	
1	DIMENSION	12/91	**SEWER LATERAL CONNECTION**	2	
				DRAWING NO. 2–18.2 (306)	
				DATE 7–2009	PAGE 28

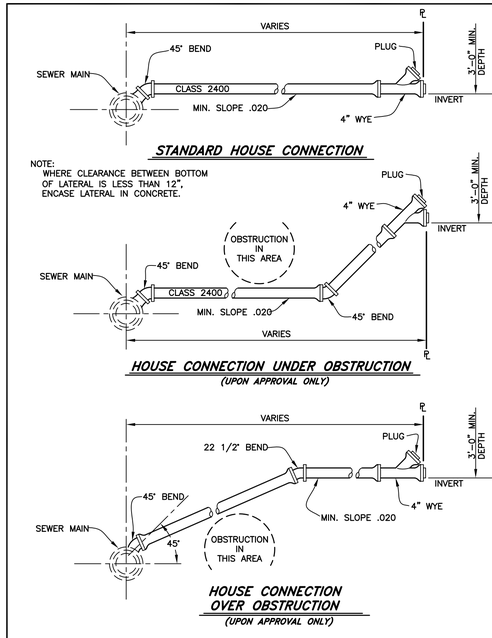

NO.	REVISION	DATE	STANDARD DETAILS FOR PUBLIC WORKS CONSTRUCTION	SECTION	
1	DIMENSION	12/91	**SEWER LATERAL WITH CLEANOUT WYE**	2	
				DRAWING NO. 2–18.3 (306)	
				DATE 7–2009	PAGE 29

DESIGNED BY: DGR/DLO
DRAWN BY: DGR/DLO
CHECKED BY: TLG
DWG NO.: 4-0800-details.dwg
SCALE (HORIZ): AS NOTED
SCALE (VERT): N/A
PLOT DATE: 3/1/11

CARSON CITY
PUBLIC WORKS DEPARTMENT
3505 BUTTI WAY CARSON CITY, NEVADA 89701
PH: 887–2355 FAX: 887–2112

PROFESSIONAL ENGINEER – STATE OF NEVADA
THOMAS LEON GUINN
Exp: 6–30–11
CIVIL
No. 18528

REV.	DATE	DESCRIPTION	BY	APP'D

NORTH/SOUTH WATER TRANSMISSION MAIN
PROJECT – PHASE 2
PROJECT No. 4.0800
CONSTRUCTION DETAILS
SEWER

SHEET C64 OF 96

H:\PROJECTS\4.0800 N-S Transmission Main Phase 2\dwg\4-0800-DETAILS.dwg, 3/1/11

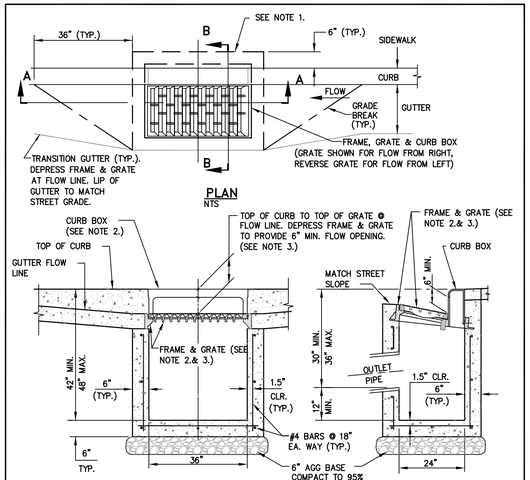

NOTES:

1. IF NO SIDEWALK IS PRESENT, POUR 6 INCH CONCRETE CURB STRUCTURE BEHIND GRATE AND TIE BEAM INTO BOX.
2. FRAME SHALL BE NEENAH R–3295 OR R–3067 SINGLE CURB UNIT WITH COMPLIANT TYPE L "VANE GRATE" AND CURB BOX, SOUTH BAY FOUNDRY VANE GRATE SOUTH BAY FOUNDRY 1947 OR APPROVED EQUAL, INSTALLED WITH PROPER FLOW DIRECTION.
3. TILT FRAME & GRATE AS REQUIRED TO ATTAIN 6 INCH MIN. FLOW OPENING & INSTALL DURABLE SHIMS BETWEEN THE CURB BOX & FRAME AS REQUIRED TO MATCH CURB BOX TO TOP OF CURB AND FACE OF CURB (SEE SECTION B–B).
4. CATCH BASIN TO BE INSTALLED OUTSIDE OF WALKING PATH. IF IT IS NOT POSSIBLE TO LOCATE CATCH BASIN OUTSIDE OF WALKING PATH THEN AN ADA COMPLIANT NEENAH MODEL DR/DL GRATE, SOUTH BAY FOUNDRY 1947–ADA OR APPROVED EQUAL SHALL BE USED UPON APPROVAL BY CARSON CITY ENGINEER OR PUBLIC WORKS DIRECTOR.

NO.	REVISION	DATE	STANDARD DETAIL FOR PUBLIC WORKS CONSTRUCTION	SECTION CARSON CITY
			CATCH BASIN TYPE 4–R	DRAWING NO. C–4.1.5
APPROVED BY:		7/09		DATE 7/2009

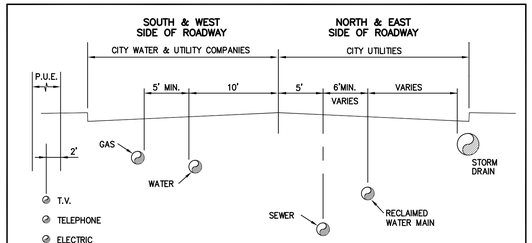

TYPICAL SECTION
NTS

APPROX. DEPTH OF COVER	
STORM DRAIN	24" MIN.*
SANITARY SEWER	84"*
WATER MAIN	42"
RECLAIMED WATER	60"**
GAS MAIN	30"***
C.A.T.V.	48"***
ELECTRICITY	72"***

* SEE NOTES 4 & 6
** SEE NOTES 5 & 6
*** OR LOCAL UTILITY STANDARDS

NOTES:

1. FOR COMMON TRENCH SECTION, SEE DETAIL, DWG. C–1.2.1. COMMON TRENCH WITH OTHER UTILITIES IS NOT ALLOWED FOR WATER, SEWER OR RECLAIMED WATER.
2. P.U.E. INDICATES PUBLIC UTILITY EASEMENT.
3. DEPTHS OF COVER AND LOCATION OTHER THAN THOSE PROVIDED HEREIN ARE SUBJECT TO CARSON CITY DEVELOPMENT ENGINEERING & PUBLIC WORKS APPROVAL.
4. DEPTH SHALL BE AS REQUIRED TO PROVIDE ADEQUATE CLEARANCE FROM OTHER UTILITIES AND TO SERVE UPSTREAM TRIBUTARY AREAS, AND TO MEET PROPER DESIGN REQUIREMENTS FOR DOWNSTREAM CONNECTIONS.
5. RECLAIMED WATER PIPE SHALL BE PURPLE IN COLOR. DEPTH MAY BE LESS THAN 60 INCHES IN LOCATIONS WHERE WATER MAINS ARE NEVER EXPECTED TO OCCUR.
6. LOCATION AND DEPTH SHALL BE AS REQUIRED TO MEET THE REQUIREMENTS OF NAC CHAPTER 445A AND THE NDEP BUREAU OF SAFE DRINKING WATER VERTICAL CROSSING CONFLICTS SUMMARY.

NO.	REVISION	DATE	STANDARD DETAIL FOR PUBLIC WORKS CONSTRUCTION	SECTION CARSON CITY
			TYPICAL UTILITY MAIN LOCATIONS	DRAWING NO. C–1.2.4
APPROVED BY:		07/09		DATE 7/2009

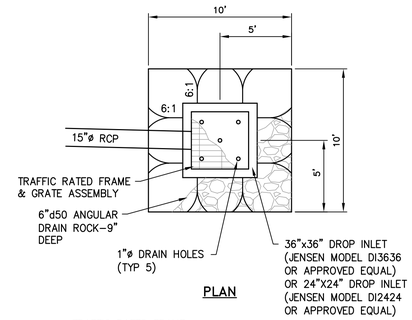

INLET BASIN (1 / C65)
NOT TO SCALE

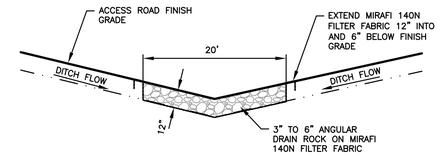

LOW FLOW CROSSING (2 / C65)
NOT TO SCALE

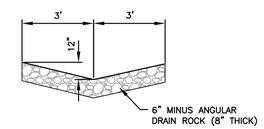

ROCK LINED DRAINAGE SWALE (3 / C65)
NOT TO SCALE

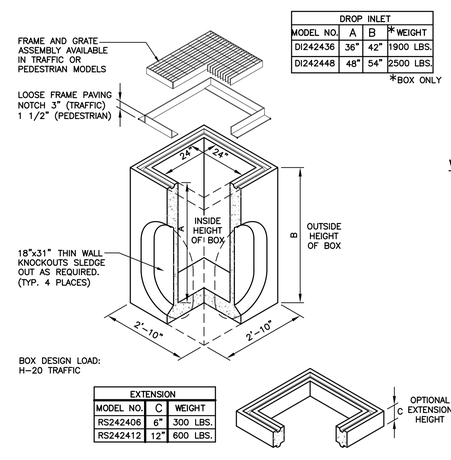

DROP INLET			
MODEL NO.	A	B	*WEIGHT
DI242436	36"	42"	1900 LBS.
DI242448	48"	54"	2500 LBS.

*BOX ONLY

EXTENSION		
MODEL NO.	C	WEIGHT
RS242406	6"	300 LBS.
RS242412	12"	600 LBS.

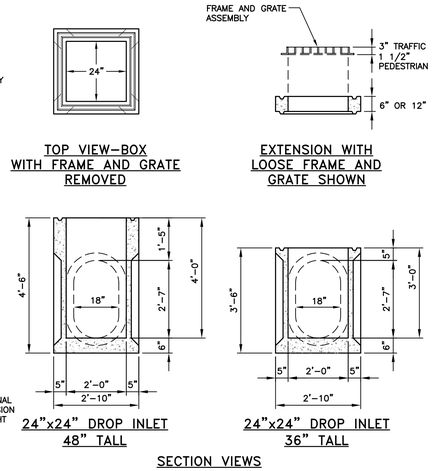

24" DROP INLET DETAIL (4 / C65)
NOT TO SCALE

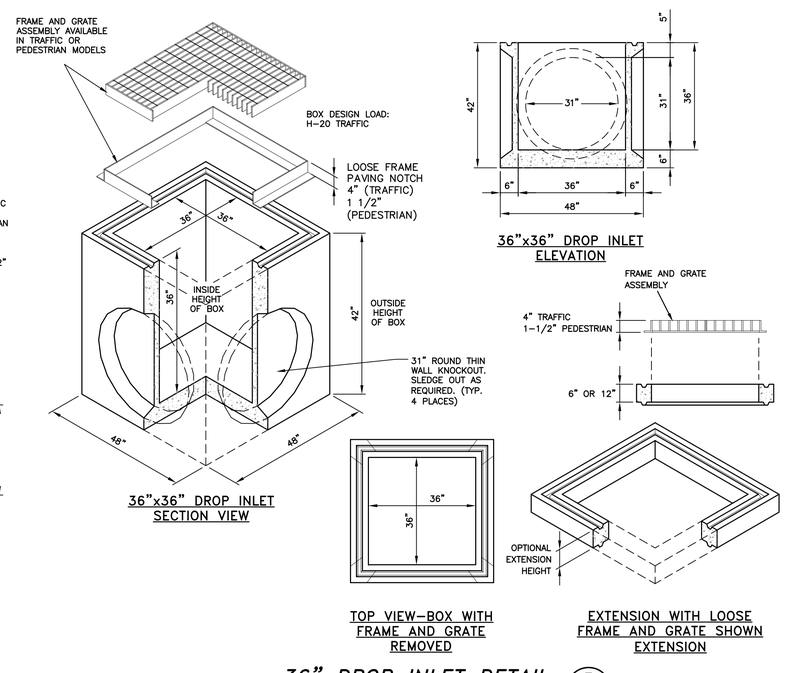

36" DROP INLET DETAIL (5 / C65)
NOT TO SCALE

DESIGNED BY: DGR/DLO
DRAWN BY: DGR/DLO
CHECKED BY: TLG
DWG NO.: I:\–0800–details.dwg
SCALE (HORIZ): AS NOTED
SCALE (VERT): N/A
PLOT DATE: 3/1/11

CARSON CITY
PUBLIC WORKS DEPARTMENT
3505 BUTTI WAY CARSON CITY, NEVADA 89701
PH: 887–2355 FAX: 887–2112

PROFESSIONAL ENGINEER – STATE OF NEVADA
THOMAS LEON GUINN
Exp: 6–30–11
CIVIL
No. 18528

REV.	DATE	DESCRIPTION	BY	APP'D

NORTH/SOUTH WATER TRANSMISSION MAIN
PROJECT – PHASE 2
PROJECT No. 4.0800
CONSTRUCTION DETAILS
STORM DRAIN

SHEET C65 OF 96

H:\PROJECTS\4.0800 N–S Transmission Main Phase 2\dwg\4–0800–DETAILS.dwg; 3/1/11

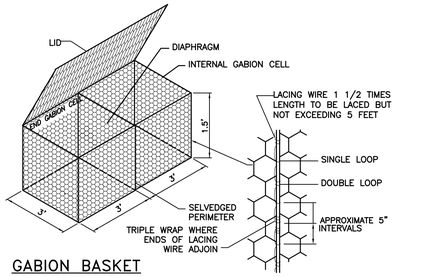

GABION BASKET ISOMETRIC

THIS LACING WIRE DETAIL SHALL BE UTILIZED FOR VERTICAL EDGE SEAMS, VERTICAL DIAPHRAGM SEAMS, TOP SEAMS & EDGES WHERE ADJACENT GABIONS MEET.

LACING WIRE DETAIL

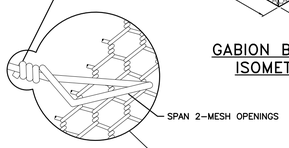

INTERNAL TIE-WIRE DETAIL

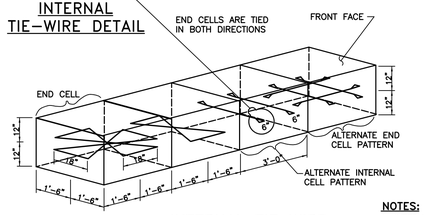

INTERNAL TIE WIRE ISOMETRIC

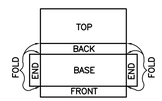

PLAN OF TYPICAL GABION SHOWING FOLDS NECESSARY TO ASSEMBLE & TIE

GABION DEVELOPMENT

NOTES:

1. INTERNAL GABIONS SHALL HAVE ONE SET OF INTERNAL TIE WIRES PLACED AT MID-HEIGHT OF THE GABIONS.
2. ALTERNATE PLACING OF ROCK & CONNECTING TIE WIRES SHALL BE DONE IN 1 SET OF 4 CONNECTING WIRES.

GABION

NOT TO SCALE

1 / C66

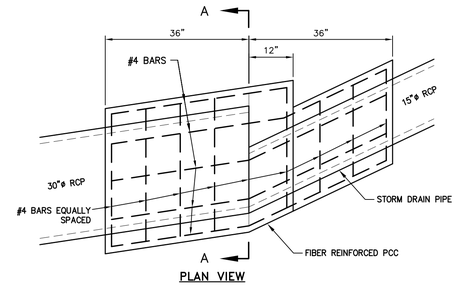

PLAN VIEW

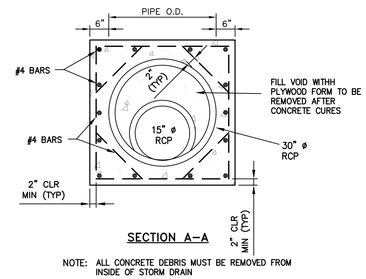

SECTION A-A

NOTE: ALL CONCRETE DEBRIS MUST BE REMOVED FROM INSIDE OF STORM DRAIN

CONCRETE PIPE COLLAR

NOT TO SCALE

2 / C66

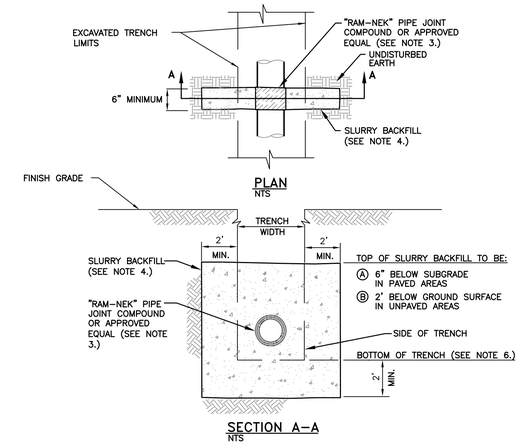

SECTION A-A
NTS

CUT-OFF COLLAR

NOT TO SCALE

3 / C66

NOTES:

1. CUT-OFF COLLARS ARE REQUIRED TO BE CONSTRUCTED WHEN THE CONTRACTOR IS AUTHORIZED TO USE CLASS "C" BACKFILL FOR SEWER LINE BEDDING. CUT-OFF COLLARS ARE NOT REQUIRED WHEN USING CLASS "A" BACKFILL FOR BEDDING MATERIAL.
2. CUT-OFF COLLARS ARE TO BE CONSTRUCTED AT THE DOWN GRADIENT END OF THE TRENCH AND SHALL BE SPACED AT 500 FOOT MAXIMUM INTERVALS, EXCEPT WHEN SHOWN OTHERWISE ON THE PLANS.
3. WRAP PIPE WITH "RAM-NEK" PIPE JOINT COMPOUND OR EQUIVALENT WHERE PIPE IS EXPOSED TO CONCRETE PRIOR TO POURING.
4. CUT-OFF COLLAR SHALL BE SLURRY BACKFILL, TYPE "A" OR "B" CONFORMING TO SUBSECTION 337.08 OF THE SSPWC. IF DRYWALL IS USED FOR FORMS, IT MAY BE LEFT IN PLACE.
5. CUT-OFF COLLARS TO BE USED ON GRAVITY SEWER MAINS ONLY.
6. WHEN AUTHORIZED TO USE CLASS "D" BACKFILL AND FILTER FABRIC FOR SUPPORT UNDER THE PIPE BEDDING IN UNSUITABLE SOIL CONDITIONS, THE CUT-OFF COLLAR SHALL EXTEND 2 FEET MINIMUM BELOW THE BEDDING SUPPORT.

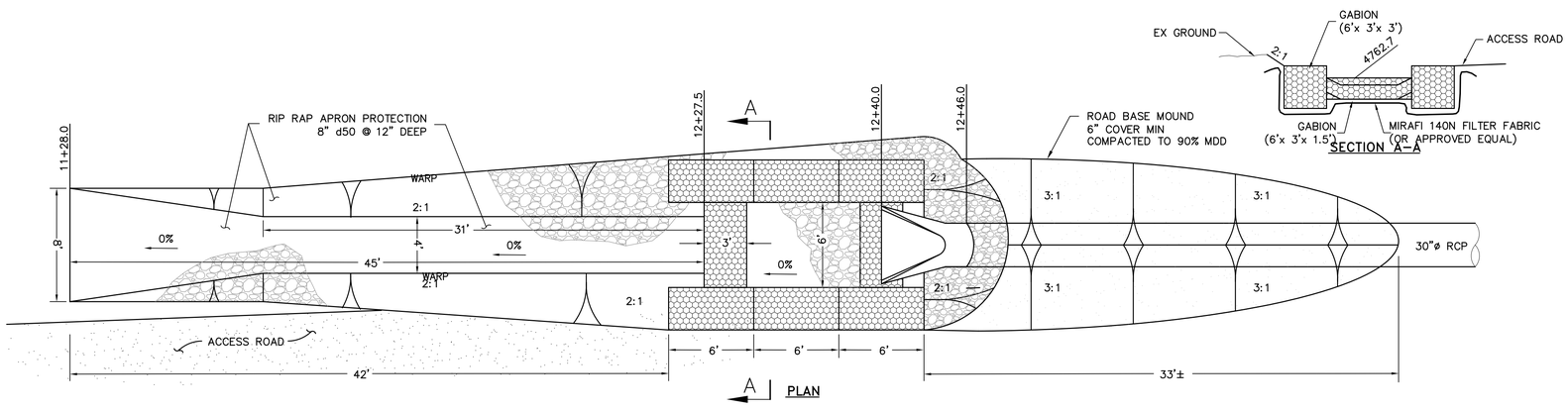

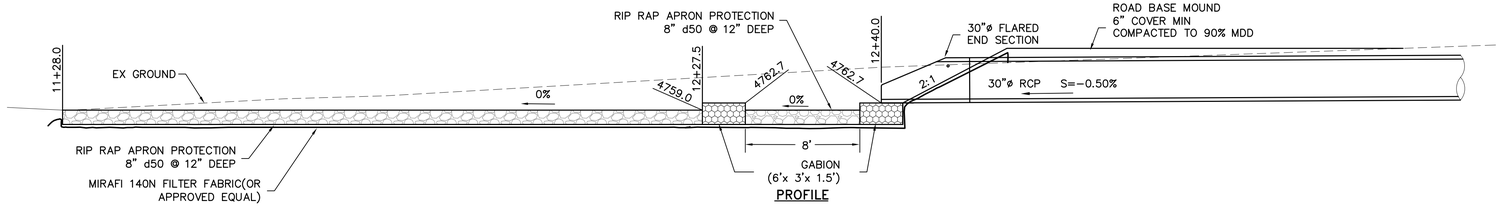

OUTLET STRUCTURE

SCALE: 1" = 5'

4 / C66

DESIGNED BY: DGR/DLO
DRAWN BY: DGR/DLO
CHECKED BY: TLG
DWG NO.: 4-0800-details.dwg
SCALE (HORIZ): NOTED
SCALE (VERT): NA
PLOT DATE: 2/2/11

CARSON CITY
PUBLIC WORKS DEPARTMENT
3505 BUTTI WAY CARSON CITY, NEVADA 89701
PH: 887-2355 FAX: 887-2112

PROFESSIONAL ENGINEER - STATE OF NEVADA
THOMAS LEON QUINN
Exp: 6-30-11
CIVIL
No. 18528

REV.	DATE	DESCRIPTION	BY	APP'D

NORTH/SOUTH WATER TRANSMISSION MAIN
PROJECT - PHASE 2
PROJECT No. 4.0800
CONSTRUCTION DETAILS
STORM DRAIN

SHEET C66 OF 96

H:\PROJECTS\4.0800 N-S Transmission Main Phase 2\dwg\4-0800-DETAILS.dwg; 2/2/11

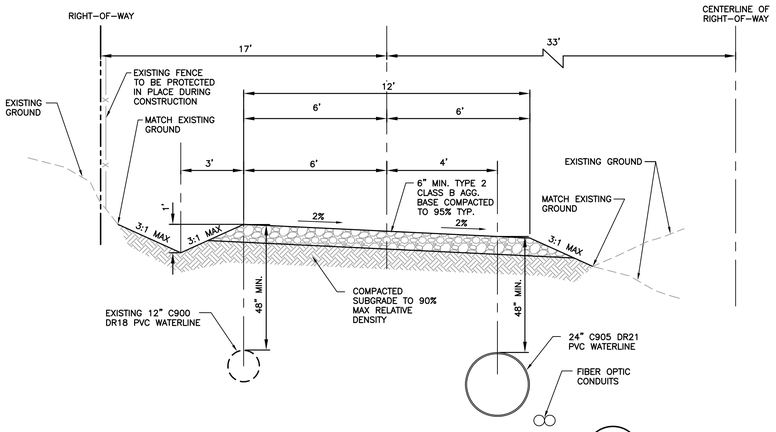

TYPICAL ACCESS ROAD SECTION (A / C67)

NOT TO SCALE

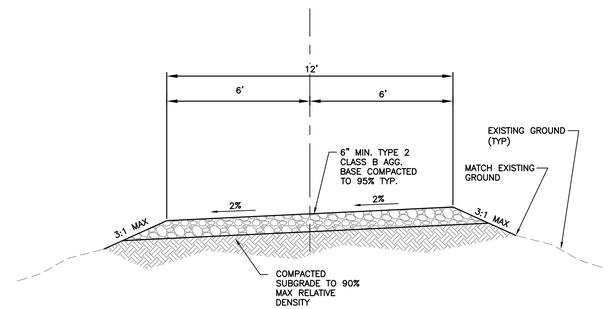

ALL-WEATHER ACCESS ROAD (B / C67)

NOT TO SCALE

NOTE:
PAVING JOINTS SHALL BE PLACED SO THAT JOINTS ARE NOT ON THE PROPOSED WHEEL LINE.

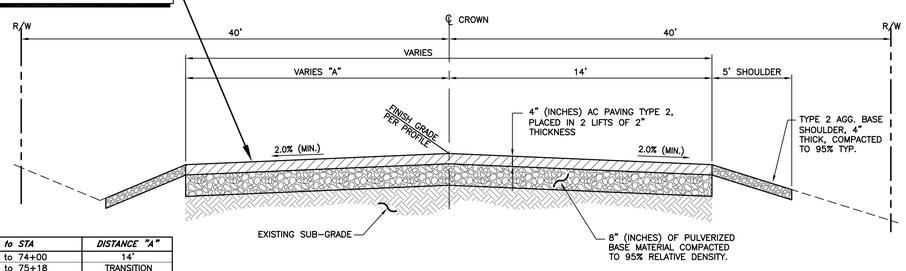

STA to STA	DISTANCE "A"
60+80 to 74+00	14'
74+00 to 75+18	TRANSITION
75+18	16'
75+18 to 75+80	TRANSITION
75+80 to 76+24	18'
76+24 to 76+75	TRANSITION
76+75 to 77+45	24'
77+45 to 77+95	TRANSITION
77+95 to 81+00	18'
81+00 to 81+80	TRANSITION
81+80 to 87+23.8	14'

TYPICAL ROADWAY SECTION – SNYDER AVE. STA 55+30 to STA 87+23.5 (C / C67)

NOT TO SCALE

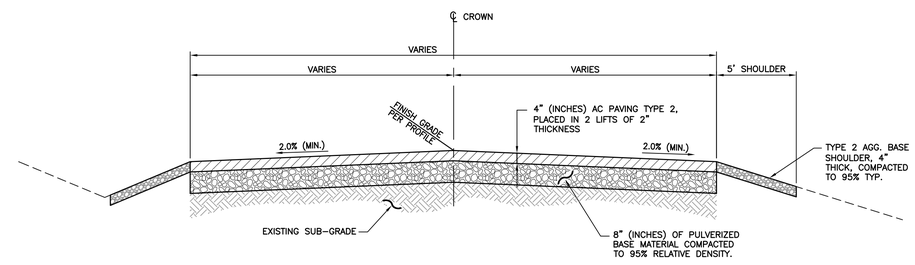

TYPICAL ROADWAY SECTION – BIGELOW DR. STA 62+50 to SNYDER AVE. (D / C67)

NOT TO SCALE

PAVING NOTES:

1. PULVERIZE EXISTING PAVEMENT SECTION TO A DEPTH OF 12" (INCHES), PLACE AND COMPACT 8" (INCHES) OF PULVERIZED BASE MATERIAL, COMPACTED TO 95% RELATIVE DENSITY.
2. EXCESS PULVERIZED MATERIAL TO BE USED AS SHOULDERING MATERIAL ALONG EXISTING ROADWAYS WITHIN A 1 1/2 MILE RADIUS OF THE PROJECT.
3. AGGREGATE BASE SHALL BE TYPE 2, CLASS B, AND CONFORM TO SECTION 200.01 OF THE STANDARD SPECIFICATIONS FOR PUBLIC WORKS CONSTRUCTION, AND SHALL BE MECHANICALLY COMPACTED TO 95% COMPACTION, IN CONFORMANCE WITH SECTION 308.05 OF THE STANDARD SPECIFICATIONS FOR PUBLIC WORKS CONSTRUCTION.
4. ASPHALT CEMENT SURFACES SHALL BE COMPACTED TO 92–97% RICE THEORETICAL OR 96% OF MARSHALL METHOD.

DESIGNED BY: DGR/DLO
DRAWN BY: DGR/DLO
CHECKED BY: TLG
DWG NO.: 4-0800-details.dwg
SCALE (HORIZ): AS NOTED
SCALE (VERT): N/A
PLOT DATE: 2/2/11

CARSON CITY PUBLIC WORKS DEPARTMENT
3505 BUTTI WAY CARSON CITY, NEVADA 89701
PH: 887-2355 FAX: 887-2112

PROFESSIONAL ENGINEER – STATE OF NEVADA
THOMAS LEON GUINN
Exp: 6-30-11
CIVIL
No. 18528

REV.	DATE	DESCRIPTION	BY	APP'D

NORTH/SOUTH WATER TRANSMISSION MAIN PROJECT – PHASE 2
PROJECT No. 4.0800
CONSTRUCTION DETAILS PAVEMENT SECTIONS

SHEET C67 OF 96

H:\PROJECTS\4.0800 N-S Transmission Main Phase 2\dwg\4-0800-DETAILS.dwg, 2/2/11

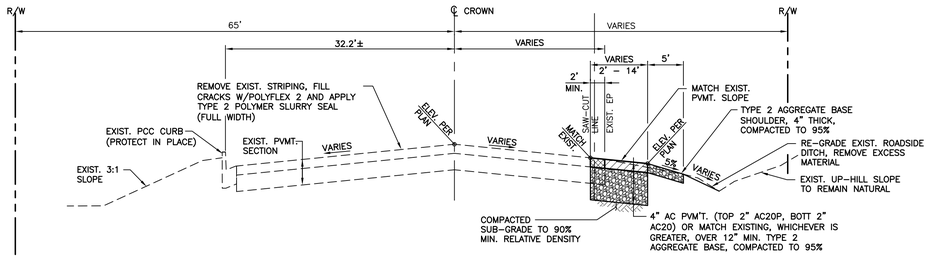

TYPICAL ROADWAY SECTION – FAIRVIEW (A / C68)
STA 47+88 to STA 56+00
NOT TO SCALE

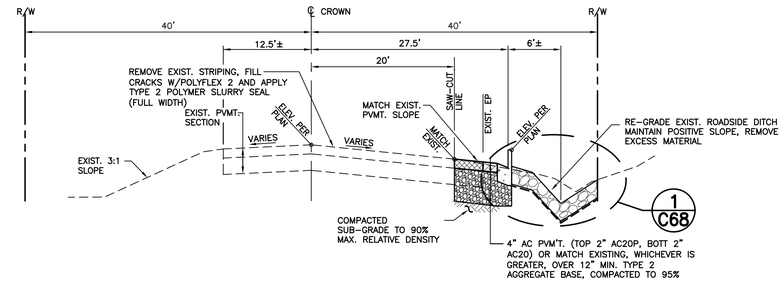

TYPICAL ROADWAY SECTION – S. EDMONDS (B / C68)
STA 84+51.5 to STA 88+62
NOT TO SCALE

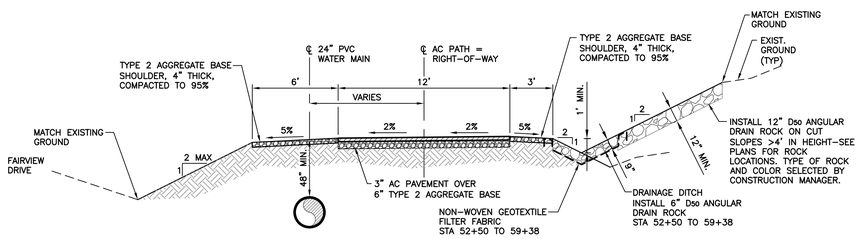

MULTI-USE PATH SECTION (C / C68)
NOT TO SCALE

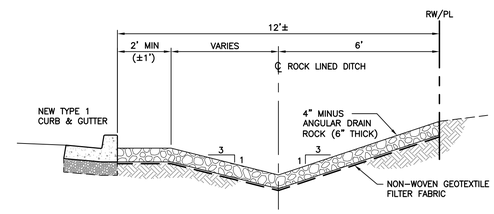

ROCK LINED DRAINAGE DITCH (1 / C68)
NOT TO SCALE

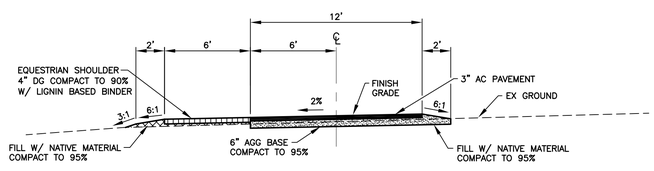

PATH RECONSTRUCTION SECTION (D / C68)
FAIRVIEW DR & E. FIFTH ST
NOT TO SCALE

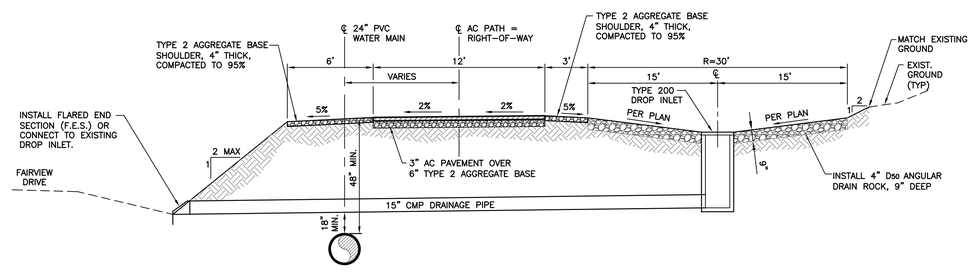

MULTI-USE PATH SECTION WITH TURNAROUND/DRAINAGE BASIN (E / C68)
NOT TO SCALE

PAVING NOTES:

1. PULVERIZE EXISTING PAVEMENT SECTION TO A DEPTH OF 12" (INCHES), PLACE AND COMPACT 8" (INCHES) OF PULVERIZED BASE MATERIAL, COMPACTED TO 95% RELATIVE DENSITY.
2. EXCESS PULVERIZED MATERIAL TO BE USED AS SHOULDERING MATERIAL ALONG EXISTING ROADWAYS WITHIN A 1 1/2 MILE RADIUS OF THE PROJECT.
3. AGGREGATE BASE SHALL BE TYPE 2, CLASS B, AND CONFORM TO SECTION 200.01 OF THE STANDARD SPECIFICATIONS FOR PUBLIC WORKS CONSTRUCTION, AND SHALL BE MECHANICALLY COMPACTED TO 95% COMPACTION, IN CONFORMANCE WITH SECTION 308.05 OF THE STANDARD SPECIFICATIONS FOR PUBLIC WORKS CONSTRUCTION.
4. ASPHALT CEMENT SURFACES SHALL BE COMPACTED TO 92–97% RICE THEORETICAL OR 96% OF MARSHALL METHOD.

DESIGNED BY: DGR/DLO
DRAWN BY: DGR/DLO
CHECKED BY: TLG
DWG NO.: 4-0800-details.dwg
SCALE (HORIZ): AS NOTED
SCALE (VERT): N/A
PLOT DATE: 2/2/11

CARSON CITY
PUBLIC WORKS DEPARTMENT
3505 BUTTI WAY CARSON CITY, NEVADA 89701
PH: 887-2355 FAX: 887-2112

PROFESSIONAL ENGINEER – STATE OF NEVADA
THOMAS LEON GUINN
Exp: 6-30-11
CIVIL
No. 18528

REV.	DATE	DESCRIPTION	BY	APP'D

NORTH/SOUTH WATER TRANSMISSION MAIN
PROJECT – PHASE 2
PROJECT No. 4.0800
CONSTRUCTION DETAILS
PAVEMENT SECTIONS

SHEET C68 OF 96

H:\PROJECTS\4.0800 N-S Transmission Main Phase 2\dwg\4-0800-DETAILS.dwg, 2/2/11

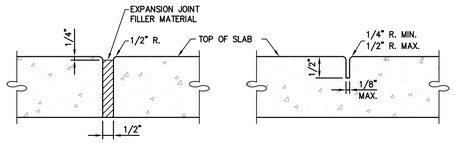

EXPANSION/ISOLATION JOINT

WEAKENED PLANE JOINT SIDEWALK, CURB & GUTTER

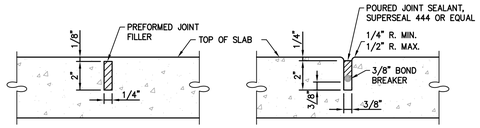

WEAKENED PLANE JOINT P.C.C. PAVEMENT

SAWED OR PREFORMED STRIP JOINT

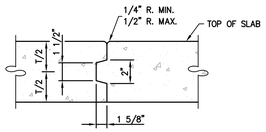

KEYED JOINT

NOTES:

1. ALL CONCRETE EDGING AND JOINTING SHALL CONFORM TO SECTION 312.09 OF THE STANDARD SPECIFICATIONS FOR PUBLIC WORKS CONSTRUCTION (SSPWC).

NO.	REVISION	DATE	STANDARD DETAIL FOR PUBLIC WORKS CONSTRUCTION	SECTION CARSON CITY
			P.C.C. JOINTING DETAILS	DRAWING NO. C-5.1.1 (312)
APPROVED BY:		7/09		DATE 7/2009

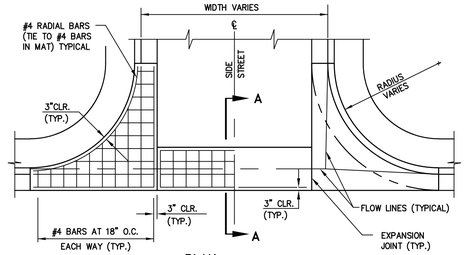

PLAN

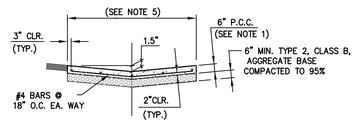

SECTION A–A

NOTES:

1. PORTLAND CEMENT CONCRETE (P.C.C.) SHALL HAVE THE FOLLOWING CHARACTERISTICS: SYNTHETIC FIBER–REINFORCEMENT (AT A MINIMUM OF 1 POUND PER CUBIC YARD), 4000 PSI MIN. COMPRESSIVE STRENGTH @ 28 DAYS, MIN. 6 SACKS OF CEMENT PER CUBIC YARD WITH A MAX. WATER/CEMENT RATIO OF 0.45, AIR ENTRAINMENT 6% ±1.5%, SLUMP AT 1 TO 4 INCHES. ALL MATERIALS SHALL CONFORM TO SSPWC SECTION 202. POLYPROPYLENE FIBERS SHALL BE ADDED TO THE P.C.C. PER THE MANUFACTURER'S RECOMMENDATIONS.
2. FOR INDUSTRIAL AREAS, AN ENGINEERED DESIGN IS REQUIRED.
3. AGGREGATE BASE SHALL BE ENGINEERED TYPE 2, CLASS B WITH 95% COMPACTION.
4. VALLEY GUTTER SHALL HAVE WEAKENED PLANE JOINTS EVERY 10 FEET.
5. LOCAL AND COLLECTOR STREETS, WIDTH = 6 FEET. ARTERIAL STREETS (DRIVEWAYS ONLY), WIDTH = 10 FEET.
6. VALLEY GUTTER SECTIONS (SPANDRELS) ALONG CURB & GUTTER SHALL BE A MONOLITHIC POUR AS SHOWN.
7. ALL CONCRETE EDGING AND JOINTING SHALL BE CONSTRUCTED IN ACCORDANCE WITH STANDARD DETAIL C–5.1.1 AND CONFORM TO SECTION 312.09 OF THE STANDARD SPECIFICATIONS FOR PUBLIC WORKS CONSTRUCTION (SSPWC).

NO.	REVISION	DATE	STANDARD DETAIL FOR PUBLIC WORKS CONSTRUCTION	SECTION CARSON CITY
			P.C.C. VALLEY GUTTER	DRAWING NO. C-5.1.2
APPROVED BY:		7/09		DATE 7/2009

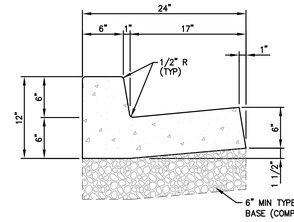

NOTES:

1. PORTLAND CEMENT CONCRETE (P.C.C.) SHALL HAVE THE FOLLOWING CHARACTERISTICS: SYNTHETIC FIBER–REINFORCEMENT (AT A MINIMUM OF 1 POUND PER CUBIC YARD), 4000 PSI MIN COMPRESSIVE STRENGTH @ 28 DAYS, MIN 6 SACKS OF CEMENT PER CUBIC YARD WITH A MAX. WATER/CEMENT RATIO OF 0.45, AIR ENTRAINMENT 6% ±1.5%, SLUMP AT 1 TO 4 INCHES ALL MATERIALS SHALL CONFORM TO SECTION 202 OF THE STANDARD SPECIFICATIONS FOR PUBLIC WORKS CONSTRUCTION.
2. ALL CONCRETE CURB & GUTTER SHALL HAVE 1/2 INCH EXPANSION JOINTS EVERY 30 FEET (UNLESS APPROVED OTHERWISE BY THE ENGINEER) AND AT ALL CURB RETURNS AND SHALL HAVE WEAKENED PLANE JOINTS EVERY 10 FEET. CONCRETE EDGING AND JOINTING SHALL BE CONSTRUCTED IN ACCORDANCE WITH STANDARD DETAIL C–5.1.1 AND CONFORM TO SECTION 312.09 OF THE STANDARD SPECIFICATIONS FOR PUBLIC WORKS CONSTRUCTION (SSPWC).
3. ALL AGGREGATE BASE SHALL BE TYPE 2, CLASS B AND CONFORM TO SECTION 200.01. OF THE STANDARD SPECIFICATIONS FOR PUBLIC WORKS CONSTRUCTION, AND SHALL BE MECHANICALLY COMPACTED TO 95% COMPACTION, IN CONFORMANCE WITH SECTION 308.05 OF THE STANDARD SPECIFICATIONS FOR PUBLIC WORKS CONSTRUCTION.
4. CURBS SHALL BE MARKED WITH A 2 INCH "S" ON THE TOP OF CURB AT SEWER LATERAL LOCATIONS.

NO.	REVISION	DATE	STANDARD DETAIL FOR PUBLIC WORKS CONSTRUCTION	SECTION CARSON CITY
			PCC CURB & GUTTER TYPE 1	DRAWING NO. C-5.1.3
APPROVED BY:		7/09		DATE 7/2009

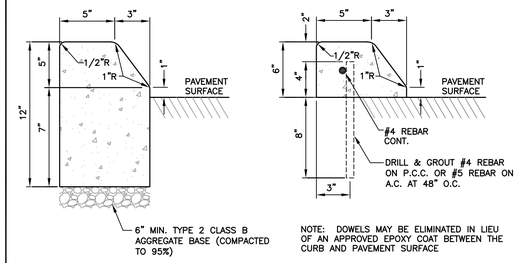

TYPE 1 P.C.C. MEDIAN CURB

TYPE 2 P.C.C. MEDIAN CURB

NOTES:

1. PORTLAND CEMENT CONCRETE (P.C.C.) SHALL HAVE THE FOLLOWING CHARACTERISTICS: SYNTHETIC FIBER–REINFORCEMENT (AT A MINIMUM OF 1 POUND PER CUBIC YARD), 4000 PSI MIN COMPRESSIVE STRENGTH @ 28 DAYS, MIN 6 SACKS OF CEMENT PER CUBIC YARD WITH A MAX. WATER/CEMENT RATIO OF 0.45, AIR ENTRAINMENT 6% ±1.5%, SLUMP AT 1 TO 4 INCHES ALL MATERIALS SHALL CONFORM TO SECTION 202 OF THE STANDARD SPECIFICATIONS FOR PUBLIC WORKS CONSTRUCTION.
2. ALL CONCRETE CURB & GUTTER SHALL HAVE 1/2 INCH EXPANSION JOINTS EVERY 30 FEET (UNLESS APPROVED OTHERWISE BY THE ENGINEER) AND AT ALL CURB RETURNS AND SHALL HAVE WEAKENED PLANE JOINTS EVERY 10 FEET. CONCRETE EDGING AND JOINTING SHALL BE CONSTRUCTED IN ACCORDANCE WITH STANDARD DETAIL C–5.1.1 AND CONFORM TO SECTION 312.09 OF THE STANDARD SPECIFICATIONS FOR PUBLIC WORKS CONSTRUCTION (SSPWC).
3. ALL AGGREGATE BASE SHALL BE TYPE 2, CLASS B AND CONFORM TO SECTION 200.01. OF THE STANDARD SPECIFICATIONS FOR PUBLIC WORKS CONSTRUCTION, AND SHALL BE MECHANICALLY COMPACTED TO 95% COMPACTION, IN CONFORMANCE WITH SECTION 308.05 OF THE STANDARD SPECIFICATIONS FOR PUBLIC WORKS CONSTRUCTION.
4. CURBS SHALL BE MARKED WITH A 2 INCH "S" ON THE TOP OF CURB AT SEWER LATERAL LOCATIONS.

NO.	REVISION	DATE	STANDARD DETAIL FOR PUBLIC WORKS CONSTRUCTION	SECTION CARSON CITY
			P.C.C. MEDIAN CURB	DRAWING NO. C-5.1.5.1
APPROVED BY:		11/10		DATE 11/2010

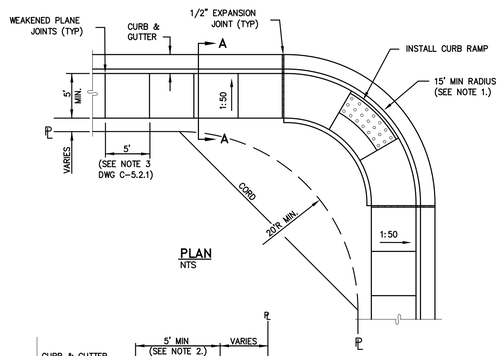

PLAN
NTS

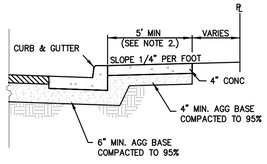

SECTION A–A
NTS

NOTES:

1. MINIMUM CURB RETURN RADIUS SHALL BE 15 FEET UNLESS OTHERWISE APPROVED BY THE CARSON CITY ENGINEER OR PUBLIC WORKS DIRECTOR.
2. SOME STREETS MAY REQUIRE WIDER SIDEWALKS.

NO.	REVISION	DATE	STANDARD DETAIL FOR PUBLIC WORKS CONSTRUCTION	SECTION CARSON CITY
			TYPE "A" SIDEWALK	DRAWING NO. C-5.2.2
APPROVED BY:		7/09		DATE 7/2009

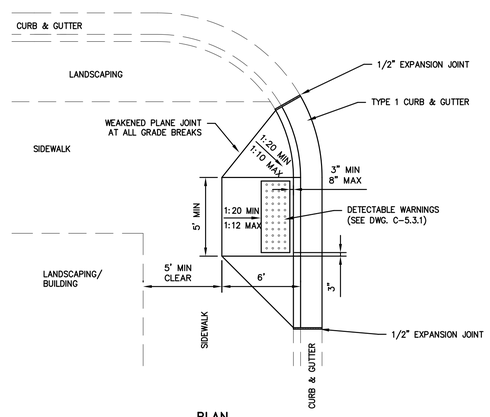

PLAN
NTS

NOTE:

1. SEE "CURB RAMP GENERAL NOTES" DWG C-5.3.1 FOR FURTHER REQUIREMENTS.

NO.	REVISION	DATE	STANDARD DETAIL FOR PUBLIC WORKS CONSTRUCTION	SECTION CARSON CITY
			PERPENDICULAR CURB RAMP DIRECTIONAL	DRAWING NO. C-5.3.2
APPROVED BY:		7/09		DATE 7/2009

DESIGNED BY: DGR/DLO
DRAWN BY: DGR/DLO
CHECKED BY: TLG
DWG NO.: K:\0800-details.dwg
SCALE (HORIZ): AS NOTED
SCALE (VERT): N/A
PLOT DATE: 2/2/11

CARSON CITY
PUBLIC WORKS DEPARTMENT
3505 BUTTI WAY CARSON CITY, NEVADA 89701
PH: 887-2355 FAX: 887-2112

PROFESSIONAL ENGINEER – STATE OF NEVADA
THOMAS LEON GUNN
Exp: 6-30-11
CIVIL
No. 18528

REV.	DATE	DESCRIPTION	BY	APP'D

NORTH/SOUTH WATER TRANSMISSION MAIN
PROJECT – PHASE 2
PROJECT No. 4.0800
CONSTRUCTION DETAILS
PAVING
.

SHEET C69 OF 96

H:\PROJECTS\4.0800 N-S Transmission Main Phase 2\dwg\4-0800-DETAILS.dwg, 2/2/11

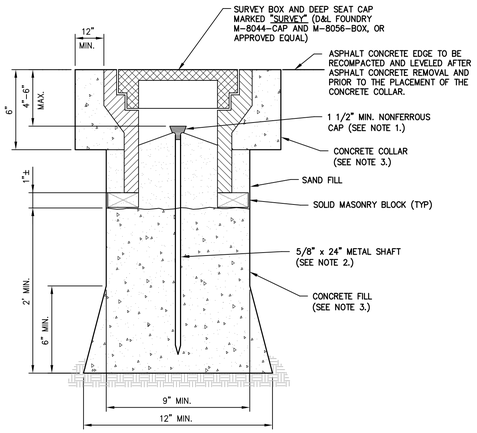

NOTES:

1. 1 1/2 INCH MIN. NONFERROUS CAP WITH PROFESSIONAL LAND SURVEYOR NO. PERMANENTLY ATTACHED PRIOR TO PLACEMENT.
2. 5/8 INCH METALLIC SHAFT (SMOOTH SHAFTS TO BE DEFORMED).
3. PORTLAND CEMENT CONCRETE (P.C.C.) SHALL HAVE THE FOLLOWING CHARACTERISTICS: 4000 PSI MIN. COMPRESSIVE STRENGTH AT 28 DAYS, MIN. 6 SACKS OF CEMENT PER CUBIC YARD WITH A MAX. WATER/CEMENT RATIO OF 0.45, AIR ENTRAINMENT 6% ±1.5%, SLUMP AT 1 TO 4 INCHES. ALL MATERIALS SHALL CONFORM TO SSPWC SECTION 202.
4. PRE-PUNCHED CAPS ARE NOT PERMITTED.

NO.	REVISION	DATE	STANDARD DETAIL FOR PUBLIC WORKS CONSTRUCTION	SECTION
			CLASS "A" SURVEY MONUMENT	CARSON CITY
				DRAWING NO. C-5.5.3
APPROVED BY:		7/09		DATE 7/2009

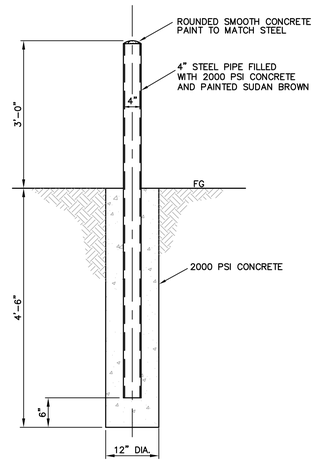

BOLLARD DETAIL PERMANENT (1 / C70)

NOT TO SCALE

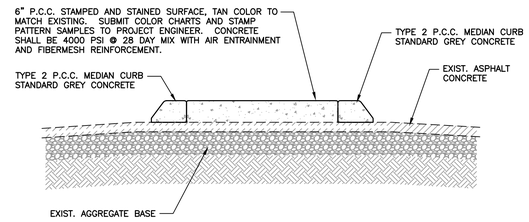

MEDIAN ISLAND TYPICAL SECTION (A / C70)

NOT TO SCALE

DESIGNED BY: DGR/DLO
DRAWN BY: DGR/DLO
CHECKED BY: TLG
DWG NO.: 4-0800-details.dwg
SCALE (HORIZ): AS NOTED
SCALE (VERT): N/A
PLOT DATE: 2/2/11

CARSON CITY
PUBLIC WORKS DEPARTMENT
3505 BUTTI WAY CARSON CITY, NEVADA 89701
PH: 887-2355 FAX: 887-2112

PROFESSIONAL ENGINEER - STATE OF NEVADA
THOMAS LEON GUINN
Exp: 6-30-11
CIVIL
No. 18528

REV.	DATE	DESCRIPTION	BY	APP'D

NORTH/SOUTH WATER TRANSMISSION MAIN
PROJECT - PHASE 2
PROJECT No. 4.0800
CONSTRUCTION DETAILS
PAVING

SHEET C70 OF 96

H:\PROJECTS\4.0800 N-S Transmission Main Phase 2\dwg\4-0800-DETAILS.dwg; 2/2/11

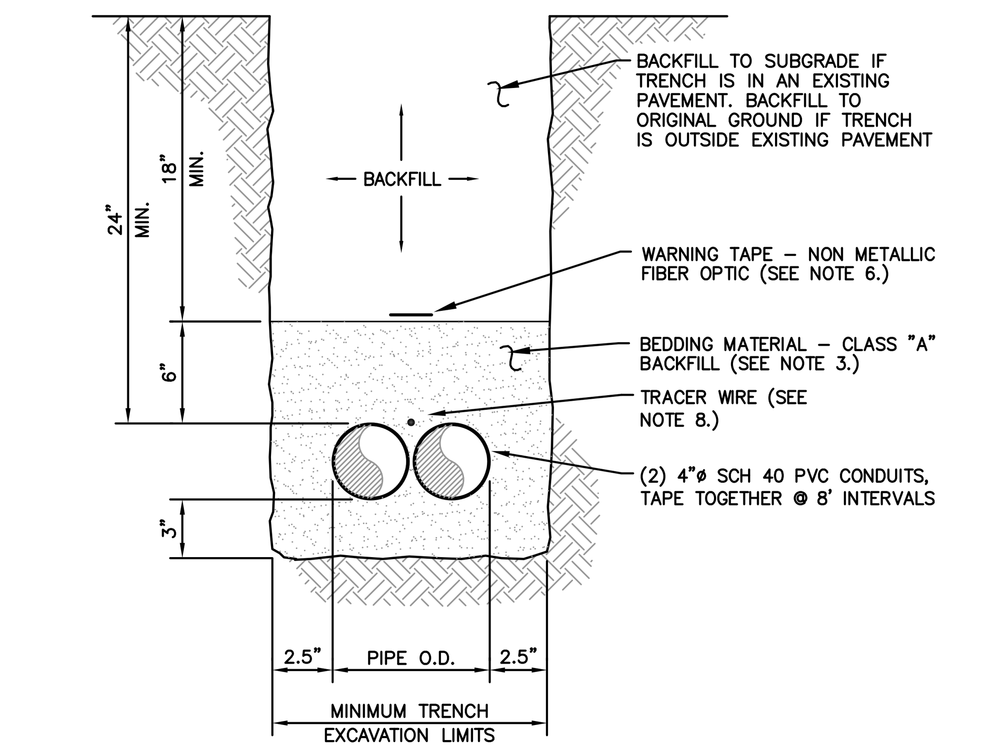

FIBER OPTIC TRENCH SECTION (1/C71)

NTS

NOTES:

1. WATER DENSIFIED BACKFILL AND TUNNELING SHALL BE BY SPECIAL PROVISION ONLY.
2. BACKFILL SHALL CONFORM TO THE REQUIREMENTS OF CLASS E BACKFILL AS SPECIFIED IN SUBSECTION 200.03.06 OF THE STANDARD SPECIFICATIONS FOR PUBLIC WORKS CONSTRUCTION (SSPWC). MATERIAL SHALL BE PLACED IN LIFT THICKNESS SPECIFIED IN SUBSECTION 305.10 OF THE SSPWC AND DENSIFIED TO 90% RELATIVE COMPACTION.
3. BEDDING SHALL CONFORM TO THE REQUIREMENTS OF CLASS A BACKFILL AS SPECIFIED IN SUBSECTION 200.03.02 OF THE SSPWC. MATERIAL SHALL BE DENSIFIED TO 90% RELATIVE COMPACTION.
4. FOR TRENCHES IN ROADWAY SECTION, SEE PAVEMENT PATCH (PERMANENT) DETAIL 1, SHT C19.
5. FOR THE PURPOSE OF PAYMENT; EXCAVATION AND BACKFILL QUANTITIES ARE BASED ON THESE STANDARD DRAWINGS, AND NO ADDITIONAL COMPENSATION WILL BE MADE. SHORING OR SLOPED CUT SLOPES MAY BE NECESSARY, BUT THERE WILL BE NO ADDITIONAL PAYMENT. ALL EXCAVATIONS SHALL CONFORM TO THE LATEST O.S.H.A. REQUIREMENTS.
6. PLACE NON METALLIC WARNING TAPE 1 FOOT ABOVE ALL BURIED PIPES AND CONDUITS.
7. TRACER WIRE SHALL BE 12 GAUGE (MINIMUM THICKNESS) INSULATED SOLID COPPER OR COPPER–CLAD STEEL CORE WIRE. INSULATION SHALL BE 30 MIL HDPE. PLANS SHALL SPECIFY WIRE STRENGTH AND INSULATION THICKNESS FOR BORING APPLICATIONS. SPLICES SHALL BE CONNECTED BY WIRE NUTS, SEALED WITH AQUA SEAL OR SILICON FILLED, AND DOUBLE WRAPPED WITH U/L LISTED ELECTRICAL TAPE. TRACER WIRE COLOR SHALL BE, BLUE FOR WATER, PURPLE FOR RECLAIMED WATER, GREEN FOR SEWER, AND YELLOW FOR ELECTRICAL/FIBER OPTIC.

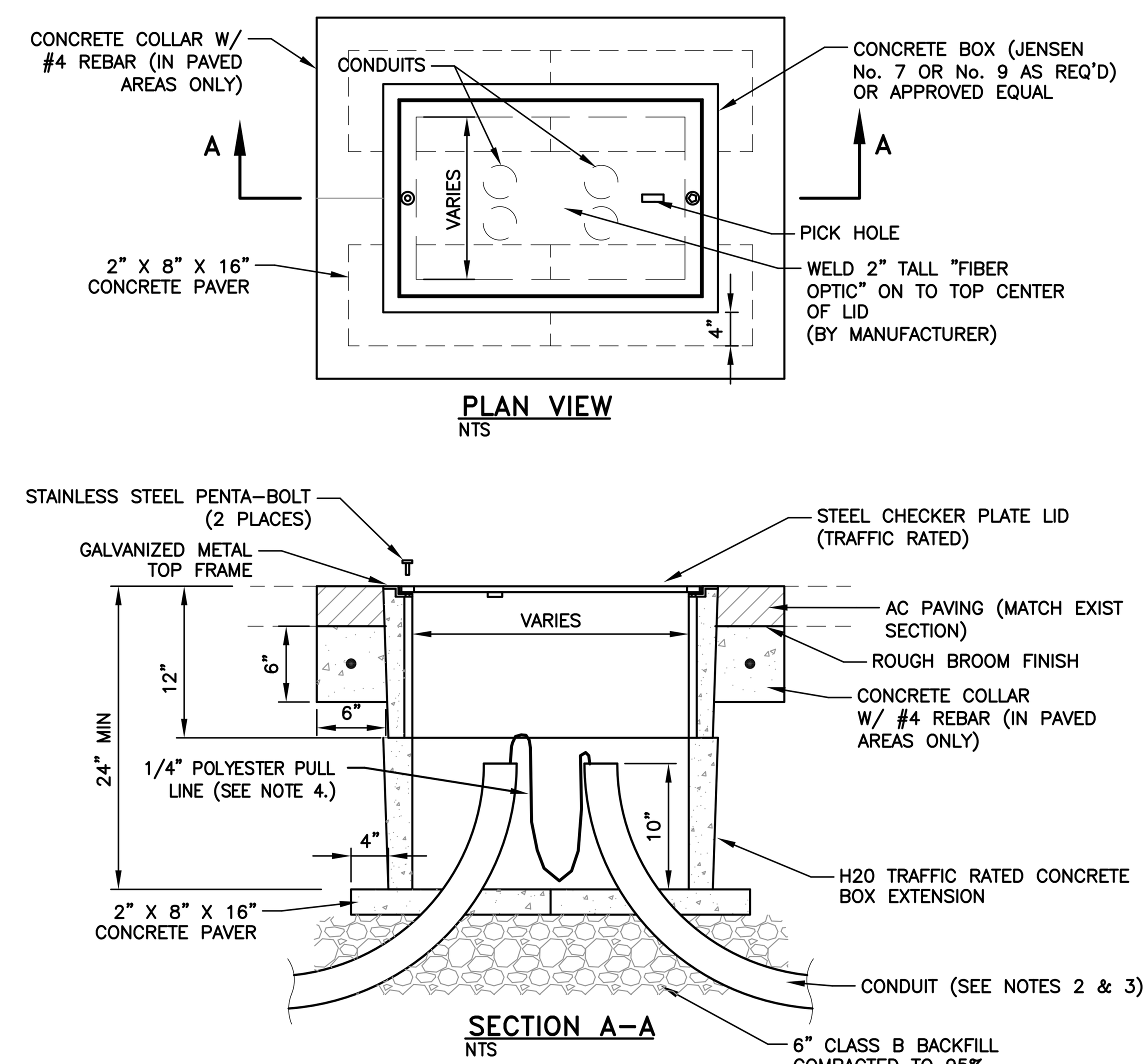

FIBER OPTIC PULL BOX & LID (2/C71)

NOT TO SCALE

NOTES:

1. PULL BOXES AND COVERS SHALL BE H–20 TRAFFIC RATED .
2. CONDUIT SHALL BE SCHEDULE 40 AND CONDUIT ENTERING A PULLBOX SHALL BE TERMINATED WITH A SWEEP AND CAPPED WITH AN END BELL.
3. CONDUITS TO USE 3 FEET RADIUS SWEEPS UNLESS OTHERWISE NOTED. SWEEPS ARE NOT TO BE CUT.
4. CONDUITS SHALL HAVE ¼" POLYESTER PULL LINE WITH SEQUENTIAL FOOTAGE MARKINGS AND A MINIMUM BREAKING STRENGTH OF 400 POUND PULL LINE SHALL EXTEND A MINIMUM OF 3 FEET FROM EACH HANDHOLE.
5. A 6 INCH CLEARANCE SHALL BE MAINTAINED FROM THE PULLBOX LIDS AND THE CONDUCTORS COILED IN THE PULL BOXES.

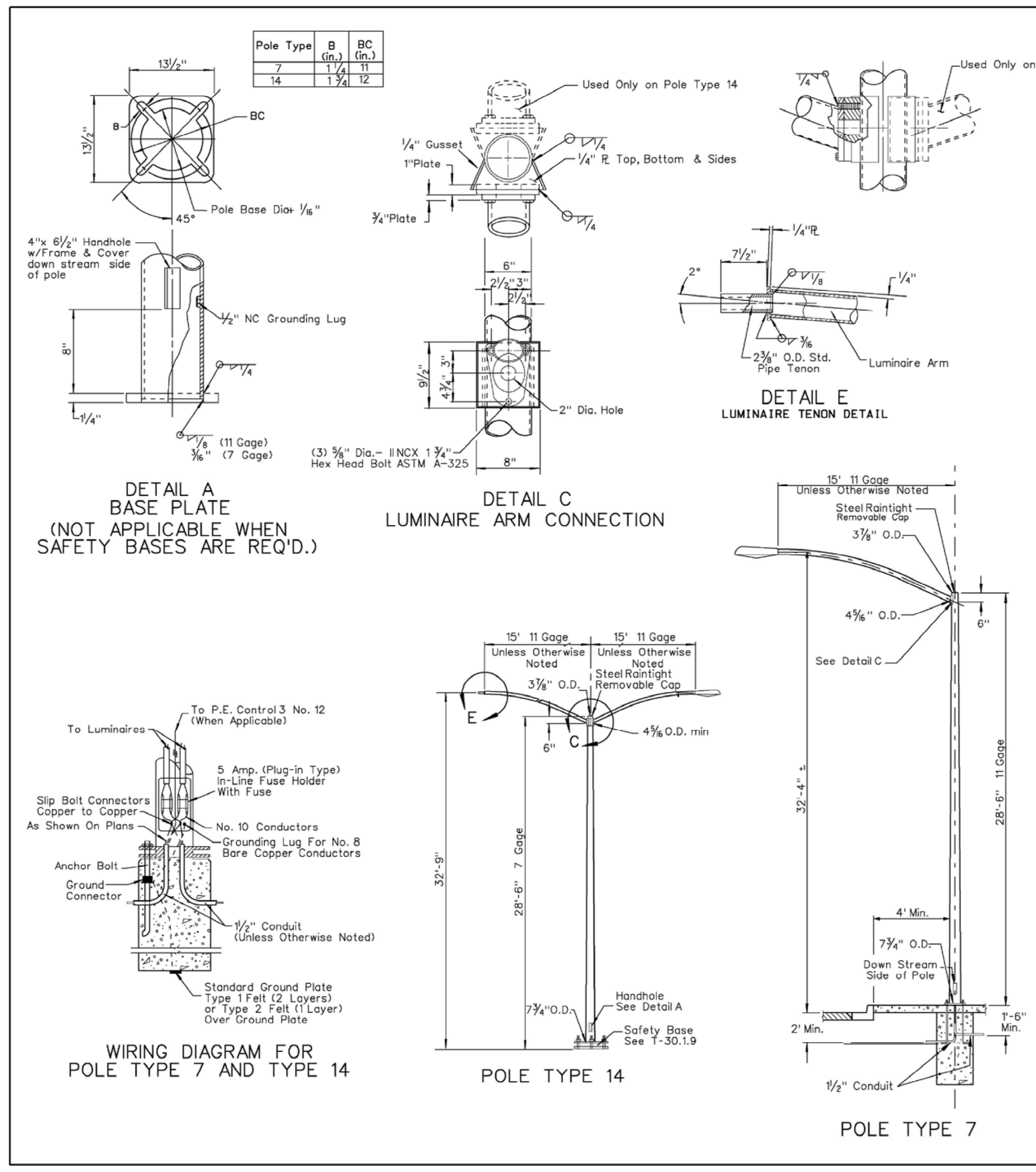

NOTES FOR ALL POLE TYPES:

DESIGN CRITERIA
AASHTO STANDARD SPECIFICATIONS FOR STRUCTURAL SUPPORTS FOR HIGHWAY SIGNS,LUMINAIRES AND TRAFFIC SIGNALS, 4th EDITION DATED 2001 AND CURRENT INTERIMS (EXCLUDING SECTION 11: FATIGUE DESIGN).

BASIC WIND SPEED = 90 MPH.

GALVANIZING
1. POLES SHALL BE GALVANIZED AS PER ASTM A–123. HARDWARE SHALL BE GALVANIZED AS PER ASTM A–153.

STEEL SIGNAL AND LUMINAIRE ARMS
1. THE LAST 3" OF THE LUMINAIRE ARM SHALL BE STRAIGHT AND HORIZONTAL WITH LUMINAIRE ATTACHED.
2. CONNECTION BETWEEN ARMS AND POLES SHALL BE MADE BY MEANS OF A RAIN TIGHT SOCKET OR A DESIGN PERMITTING SIMPLE REMOVAL OF THE ARMS.

ANCHOR BOLTS
1. PROVIDE 4–ASTM A–307 ANCHOR BOLTS, 8–ASTM A–563 HEAVY HEX NUTS, AND 8–ASTM F–436 HARDENED STEEL WASHERS FOR EACH POLE.
2. THREADS MAY BE CUT OR ROLLED, BOLTS SHALL BE GALVANIZED OR PLATED AFTER THREADS ARE FORMED. EACH BOLT SHALL BE PROVIDED WITH 6" OF THREADS.
3. WHEN USING A SAFETY BASE, ANCHOR BOLTS SHALL NOT EXTEND ABOVE THE SLIP BOLT GASKET.

STEEL POLES
1. BASE COVERS ARE REQUIRED ON ALL POLES EXCEPT WHERE SAFETY BASE IS SPECIFIED.
2. A REDUCED GAGE FOR SHAFT OF POLE WILL BE ACCEPTABLE ABOVE SIGNAL ARM ATTACHMENT SIMILAR TO POLE TYPE 28.

WELDS
1. LONGITUDINAL WELDS BY SUBMERGED ARC OR ERW CIRCUMFERENTIAL BUTT WELDS SHALL HAVE PERMANENT BACK–UP RINGS. ALL EXPOSED BUTT WELDS SHALL BE GROUND FLUSH.
2. FOR WELD SIZES NOT SHOWN, USE MINIMUM SIZE WELD AS SPECIFIED BY THE LATEST WELDING CODE.
3. BREAK ALL SHARP EDGES FOR WIRE PROTECTION.

FOUNDATIONS
1. AT LOCATIONS BEHIND CURB, ALL SIGNAL AND LIGHTING POLES SHALL BE LOCATED AT THE BACK EDGE OF SIDEWALK OR AT THE R/W LINE, TO OBTAIN A MINIMUM SETBACK DISTANCE OF 5' BEHIND THE BACK EDGE OF CURB TO CENTER OF POLE. (SEE SHEET T–30.1.8 FOR TYPICAL LOCATIONS.)
2. AT LOCATIONS WITHOUT CURB, POLES SHALL BE PLACED A MINIMUM DISTANCE OF 6' FROM SHOULDER OR A MINIMUM OF 10' FROM TRAVEL WAY, WHICH EVER IS GREATER.
3. FOR FOUNDATION DETAILS SEE SHEET T–30.1.16.
4. FOR FOUNDATION ISLAND SEE SHEET T–30.1.8.
5. CONCRETE SHALL BE CLASS A OR AA.

SAFETY BASES
1. TYPE 7 AND TYPE 14 POLES SHALL REQUIRE SAFETY BASE ASSEMBLIES UNLESS MOUNTED ON STRUCTURE BEHIND BARRIER RAIL OR NOTED OTHERWISE ON THE PLANS, SEE SHEET T–30.1.9 FOR DETAILS.

NEVADA DEPARTMENT OF TRANSPORTATION
TYPE 7 & 14 POLE LIGHTING & SIGNAL LIGHT POLES
Signed Original On File | T–30.1.10 (623)
CHIEF SAFETY/TRAFFIC ENGR. | ADOPTED 12/79 | REVISION 1/05

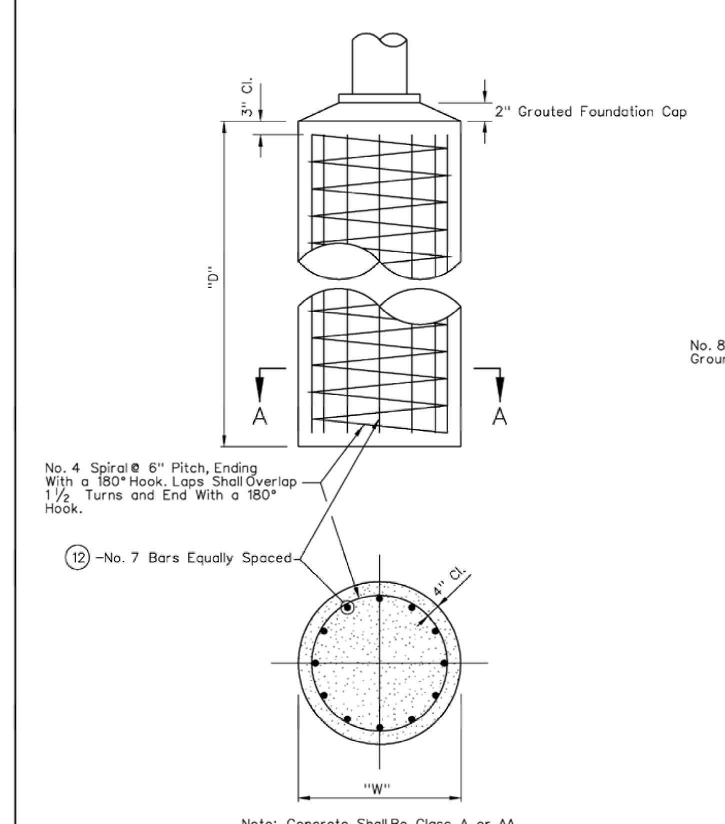

SECTION A–A
PILE FOUNDATION

PILE FOUNDATION TABLE

POLE TYPE	MAST ARM LENGTH	**"D"	**"W" ①	ANCHOR BOLTS (4 EACH)
1A & 1B	N/A	3'	2'	¾" x 18" x 4"
7	ALL	5'	2–6"	*1" x 36" x 4"
14	ALL	5'	2–6"	*1½" x 48" x 4"
28	ALL	12'	3'	2" x 66" x 6"
30 AND 35	≤ 45'	12'	3'	1¾" x 60" x 6"
30A AND 35A	≤ 60'	12'	3'	2" x 66" x 6"

** Unless otherwise shown on plans.
* Not applicable when mounted on structures.
① – When "W" = 2'–0" use 4–No.5 bars equally spaced.
When "W" = 2'–6" use 8–No.5 bars equally spaced.

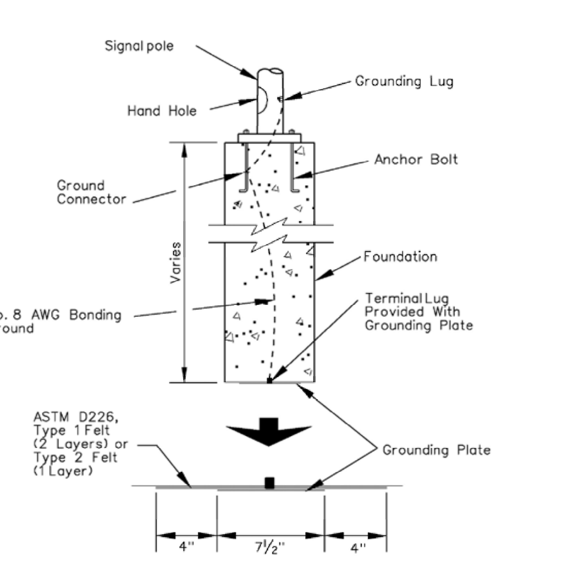

1. Connect Bonding Wire to the Reinforcing Steel Cage Near the Midpoint of the Foundation or Anchor Bolts.
2. Ground Plate Shall Be Made of Nonferrous Material (Typically Brass or Copper). Install "NSI" Ground Plate or Equivalent.

POLE GROUNDING DETAIL

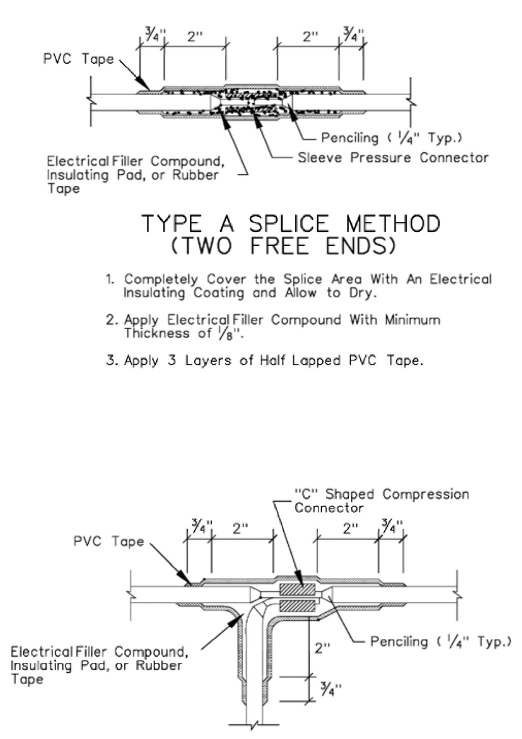

TYPE A SPLICE METHOD
(TWO FREE ENDS)

1. Completely Cover the Splice Area With An Electrical Insulating Coating and Allow to Dry.
2. Apply Electrical Filler Compound With Minimum Thickness of ⅛".
3. Apply 3 Layers of Half Lapped PVC Tape.

TYPE B SPLICE METHOD
(THREE FREE ENDS OR ONE FREE END AND ONE THROUGH CONDUCTOR)

1. Completely Cover the Splice Area With An Electrical Insulating Coating and Allow to Dry.
2. Apply 2 Layers of Electrical Insulating Pad With Minimum Thickness of ⅛" Each Layer or 2 Layers, Half Lapped, Synthetic Oil Resistant, Self Fusing Rubber Tape.
3. Apply 3 Layers of Half Lapped PVC Tape.

CONDUCTOR SPLICING METHODS

NOTES:
1. ALL DIMENSIONS ARE MINIMAL.
2. RUBBER TAPES SHALL BE ROLLED AFTER APPLICATION.
3. WHEN PVC TAPE IS USED AS A FINAL LAYER, PAINT FINISHED SPLICE WITH ELECTRICAL INSULATING COATING.

NEVADA DEPARTMENT OF TRANSPORTATION
PILE FOUNDATION, POLE GROUNDING DETAIL, CONDUCTOR SPLICE METHODS
Signed Original On File | T–30.1.16 (623)
CHIEF SAFETY/TRAFFIC ENGR. | ADOPTED 8/98 | REVISION

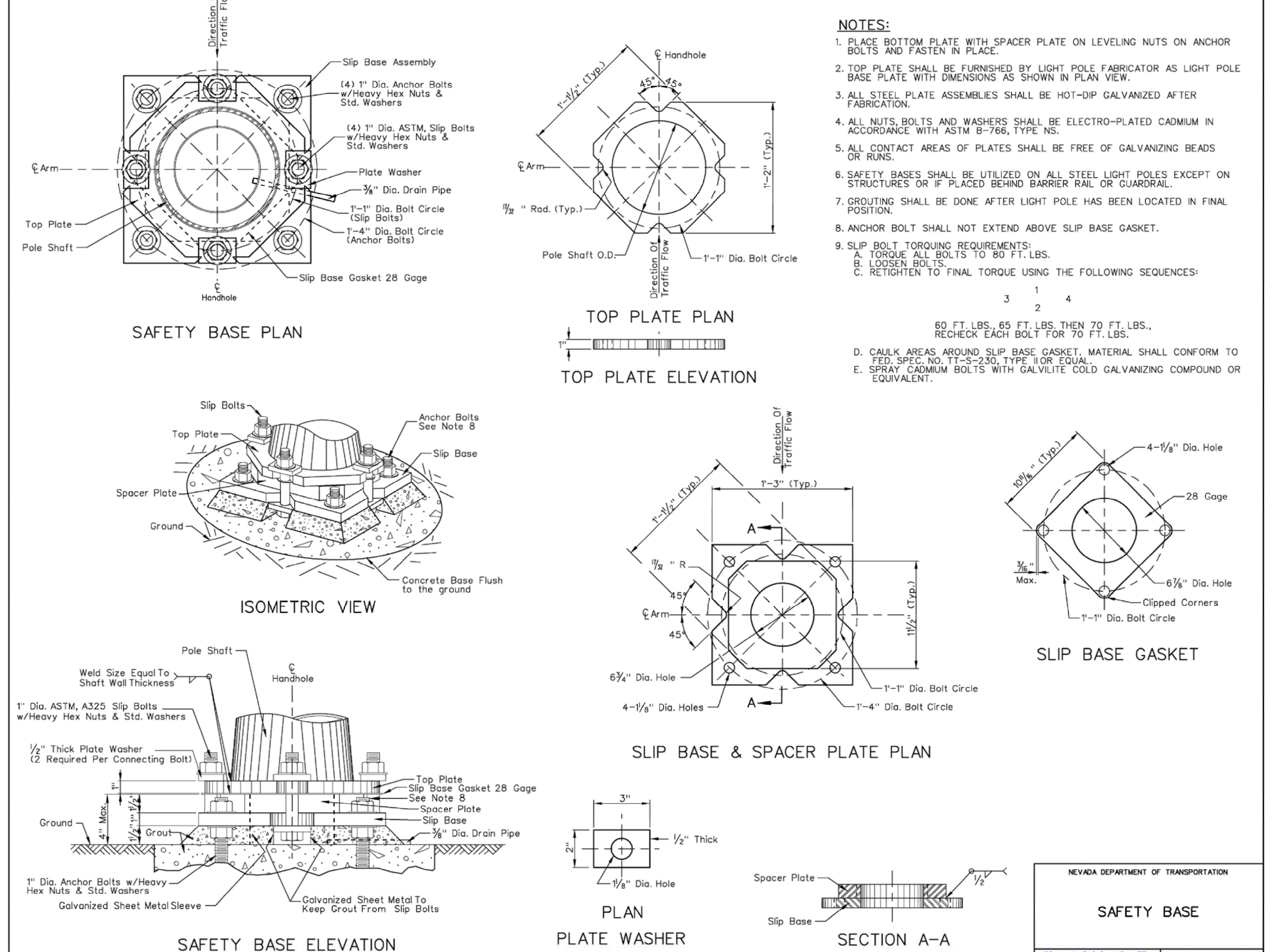

NOTES:
1. PLACE BOTTOM PLATE WITH SPACER PLATE ON LEVELING NUTS ON ANCHOR BOLTS AND FASTEN IN PLACE.
2. TOP PLATE SHALL BE FURNISHED BY LIGHT POLE FABRICATOR AS LIGHT POLE BASE PLATE WITH DIMENSIONS AS SHOWN IN PLAN VIEW.
3. ALL STEEL PLATE ASSEMBLIES SHALL BE HOT–DIP GALVANIZED AFTER FABRICATION.
4. ALL NUTS, BOLTS AND WASHERS SHALL BE ELECTRO–PLATED CADMIUM IN ACCORDANCE WITH ASTM B–766, TYPE NS.
5. ALL CONTACT AREAS OF PLATES SHALL BE FREE OF GALVANIZING BEADS OR RUNS.
6. SAFETY BASES SHALL BE UTILIZED ON ALL STEEL LIGHT POLES EXCEPT ON STRUCTURES OR IF PLACED BEHIND BARRIER RAIL OR GUARDRAIL.
7. GROUTING SHALL BE DONE AFTER LIGHT POLE HAS BEEN LOCATED IN FINAL POSITION.
8. ANCHOR BOLT SHALL NOT EXTEND ABOVE SLIP BASE GASKET.
9. SLIP BOLT TORQUING REQUIREMENTS:
   A. TORQUE ALL BOLTS TO 80 FT. LBS.
   B. LOOSEN BOLTS.
   C. RETIGHTEN TO FINAL TORQUE USING THE FOLLOWING SEQUENCES:

   1
   3 4
   2

   60 FT. LBS., 65 FT. LBS. THEN 70 FT. LBS., RECHECK EACH BOLT FOR 70 FT. LBS.

   D. CAULK AREAS AROUND SLIP BASE GASKET. MATERIAL SHALL CONFORM TO FED. SPEC. NO. TT–S–230, TYPE II OR EQUAL.
   E. SPRAY CADMIUM BOLTS WITH GALVILITE COLD GALVANIZING COMPOUND OR EQUIVALENT.

NEVADA DEPARTMENT OF TRANSPORTATION
SAFETY BASE
Signed Original On File | T–30.1.9 (623)
CHIEF SAFETY/TRAFFIC ENGR. | ADOPTED | REVISION

DESIGNED BY: DGR/DLO
DRAWN BY: DGR/DLO
CHECKED BY: TLG
DWG NO.: 4–0800–details.dwg
SCALE (HORIZ): AS NOTED
SCALE (VERT): N/A
PLOT DATE: 2/2/11

CARSON CITY
PUBLIC WORKS DEPARTMENT
3505 BUTTI WAY CARSON CITY, NEVADA 89701
PH: 887–2355 FAX: 887–2112

PROFESSIONAL ENGINEER – STATE OF NEVADA
THOMAS LEON GUINN
Exp: 6–30–11
CIVIL
No. 18528

REV.	DATE	DESCRIPTION	BY	APP'D

NORTH/SOUTH WATER TRANSMISSION MAIN
PROJECT – PHASE 2
PROJECT No. 4.0800

CONSTRUCTION DETAILS
FIBER OPTIC & MISCELLANEOUS

SHEET C71 OF 96

H:\PROJECTS\4.0800 N-S Transmission Main Phase 2\dwg\4-0800-DETAILS.dwg; 2/2/11

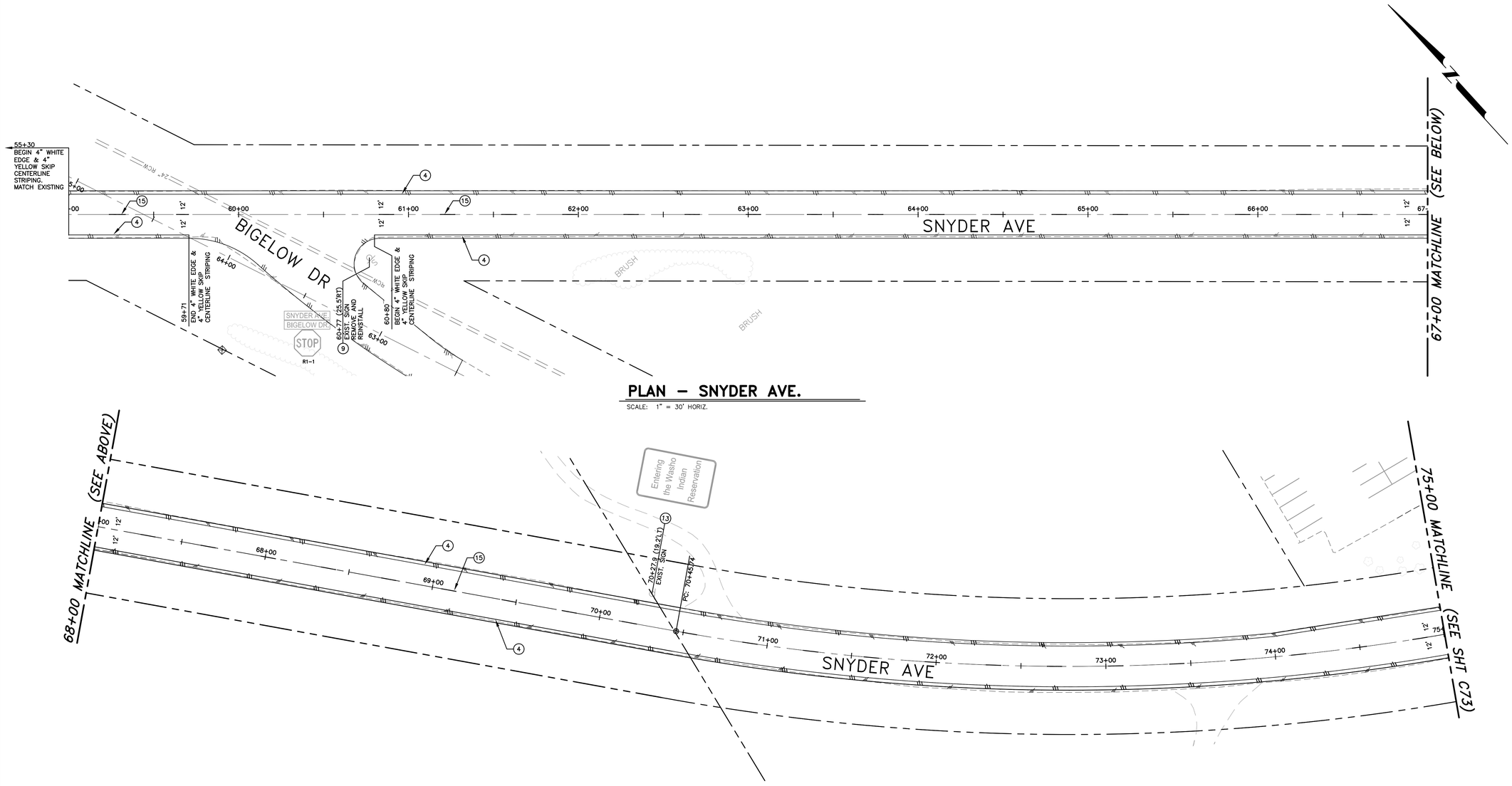

PLAN – SNYDER AVE.

SCALE: 1" = 30' HORIZ.

PLAN – SNYDER AVE.

SCALE: 1" = 30' HORIZ.

SIGNING & STRIPING NOTES:

1. PAINT 24" WIDE SOLID WHITE STOP BAR.
2. PAINT 8" WIDE SOLID WHITE LANE STRIPE.
3. PAINT 8" WIDE WHITE SKIP STRIPE.
4. PAINT 4" WIDE SOLID WHITE LANE LINE STRIPE.
5. PAINT 4" WIDE SOLID DOUBLE YELLOW CENTERLINE STRIPE.
6. PAINT 4" WIDE SOLID YELLOW WITH 4" YELLOW SKIP STRIPE.
7. PAINT SOLID WHITE DIRECTIONAL ARROW LEGEND AS SHOWN.
8. PAINT SOLID WHITE PAVEMENT LEGEND AS SHOWN.
9. INSTALL TRAFFIC SIGN & POST PER STD. DWG R-415.
10. OBLITERATE EXISTING PAVEMENT MARKING.
11. INSTALL 36" TUBULAR CHANNELIZER POST "DAVIDSON FG300" WITH GLUE DOWN BASE OR APPROVED EQUAL, PER MAUFACTURERS RECOMMENDATIONS.
12. INSTALL TYPE 2 OBJECT MARKER WITH GLUE DOWN BASE PER NDOT STD. DWG R-9.2.1.
13. PROTECT-IN-PLACE
14. PAINT CROSSWALK STRIPING PER STD. DWG C-5.4.3
15. PAINT 4" WIDE YELLOW SKIP STRIPE

GENERAL NOTES:

1. ALL STRIPING SHALL CONFORM TO THE MANUAL ON UNIFORM TRAFFIC CONTROL DEVICES (MUTCD) FOR STREETS AND HIGHWAYS, 2009 EDITION.
2. ALL PAINTED STRIPING AND PAVEMENT LEGENDS SHALL CONFORM TO CARSON CITY STREETS DEPARTMENT SPECIFICATIONS.

SCALE
30 0 15 30
HORIZ: 1" = 30'

DESIGNED BY: DGR/DLO
DRAWN BY: DGR/DLO
CHECKED BY: TLG
DWG NO.: striping-snyder.dwg
SCALE (HORIZ): 1"=30'
SCALE (VERT): N/A
PLOT DATE: 2/14/11

CARSON CITY
PUBLIC WORKS DEPARTMENT
3505 BUTTI WAY CARSON CITY, NEVADA 89701
PH: 887-2355 FAX: 887-2112

PROFESSIONAL ENGINEER – STATE OF NEVADA
THOMAS LEON GUINN
Exp: 6-30-11
CIVIL
No. 18528

REV.	DATE	DESCRIPTION	BY	APP'D

NORTH/SOUTH WATER TRANSMISSION MAIN
PROJECT – PHASE 2
PROJECT No. 4.0800
SNYDER RD PAVEMENT IMPROVEMENTS
SIGNING & STRIPING PLAN

SHEET C72 OF 96

H:\PROJECTS\4.0800 N-S Transmission Main Phase 2\dwg\STRIPING-SNYDER.dwg; 2/14/11

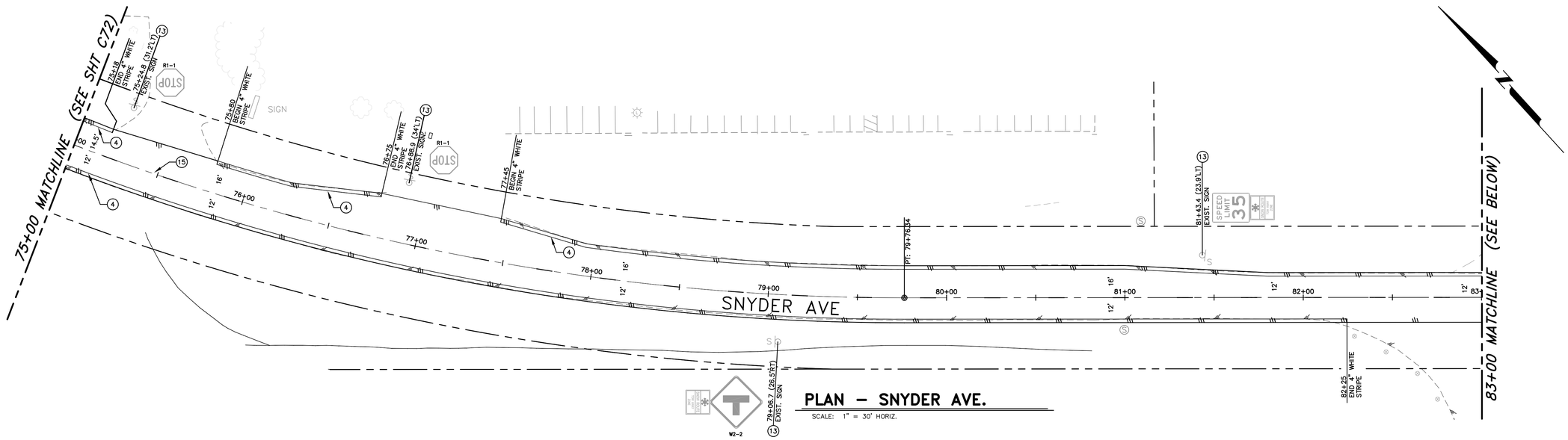

PLAN – SNYDER AVE.

SCALE: 1" = 30' HORIZ.

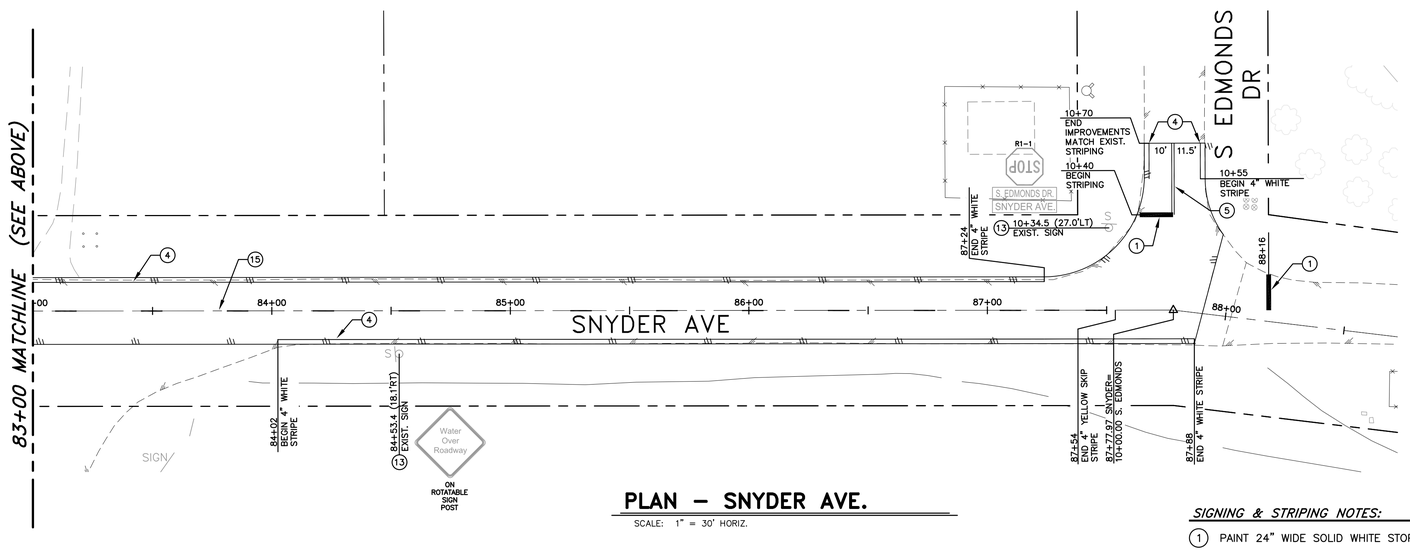

PLAN – SNYDER AVE.

SCALE: 1" = 30' HORIZ.

SIGNING & STRIPING NOTES:

1. PAINT 24" WIDE SOLID WHITE STOP BAR.
2. PAINT 8" WIDE SOLID WHITE LANE STRIPE.
3. PAINT 8" WIDE WHITE SKIP STRIPE.
4. PAINT 4" WIDE SOLID WHITE LANE LINE STRIPE.
5. PAINT 4" WIDE SOLID DOUBLE YELLOW CENTERLINE STRIPE.
6. PAINT 4" WIDE SOLID YELLOW WITH 4" YELLOW SKIP STRIPE.
7. PAINT SOLID WHITE DIRECTIONAL ARROW LEGEND AS SHOWN.
8. PAINT SOLID WHITE PAVEMENT LEGEND AS SHOWN.
9. INSTALL TRAFFIC SIGN & POST PER STD. DWG R-415.
10. OBLITERATE EXISTING PAVEMENT MARKING.
11. INSTALL 36" TUBULAR CHANNELIZER POST "DAVIDSON FG300" WITH GLUE DOWN BASE OR APPROVED EQUAL, PER MAUFACTURERS RECOMMENDATIONS.
12. INSTALL TYPE 2 OBJECT MARKER WITH GLUE DOWN BASE PER NDOT STD. DWG R-9.2.1.
13. PROTECT-IN-PLACE
14. PAINT CROSSWALK STRIPING PER STD. DWG C-5.4.3
15. PAINT 4" WIDE YELLOW SKIP STRIPE

GENERAL NOTES:

1. ALL STRIPING SHALL CONFORM TO THE MANUAL ON UNIFORM TRAFFIC CONTROL DEVICES (MUTCD) FOR STREETS AND HIGHWAYS, 2009 EDITION.
2. ALL PAINTED STRIPING AND PAVEMENT LEGENDS SHALL CONFORM TO CARSON CITY STREETS DEPARTMENT SPECIFICATIONS.

SCALE
30 0 15 30
HORIZ: 1" = 30'

DESIGNED BY: DGR/DLO
DRAWN BY: DGR/DLO
CHECKED BY: TLG
DWG NO.: striping-snyder.dwg
SCALE (HORIZ): 1"=30'
SCALE (VERT): N/A
PLOT DATE: 2/14/11

CARSON CITY
PUBLIC WORKS DEPARTMENT
3505 BUTTI WAY CARSON CITY, NEVADA 89701
PH: 887-2355 FAX: 887-2112

PROFESSIONAL ENGINEER – STATE OF NEVADA
THOMAS LEON GUINN
Exp: 6-30-11
CIVIL
No. 18528

REV.	DATE	DESCRIPTION	BY	APP'D

NORTH/SOUTH WATER TRANSMISSION MAIN
PROJECT – PHASE 2
PROJECT No. 4.0800
SNYDER RD PAVEMENT IMPROVEMENTS
SIGNING & STRIPING PLAN

SHEET C73 OF 96

H:\PROJECTS\4.0800 N-S Transmission Main Phase 2\dwg\STRIPING-SNYDER.dwg; 2/14/11

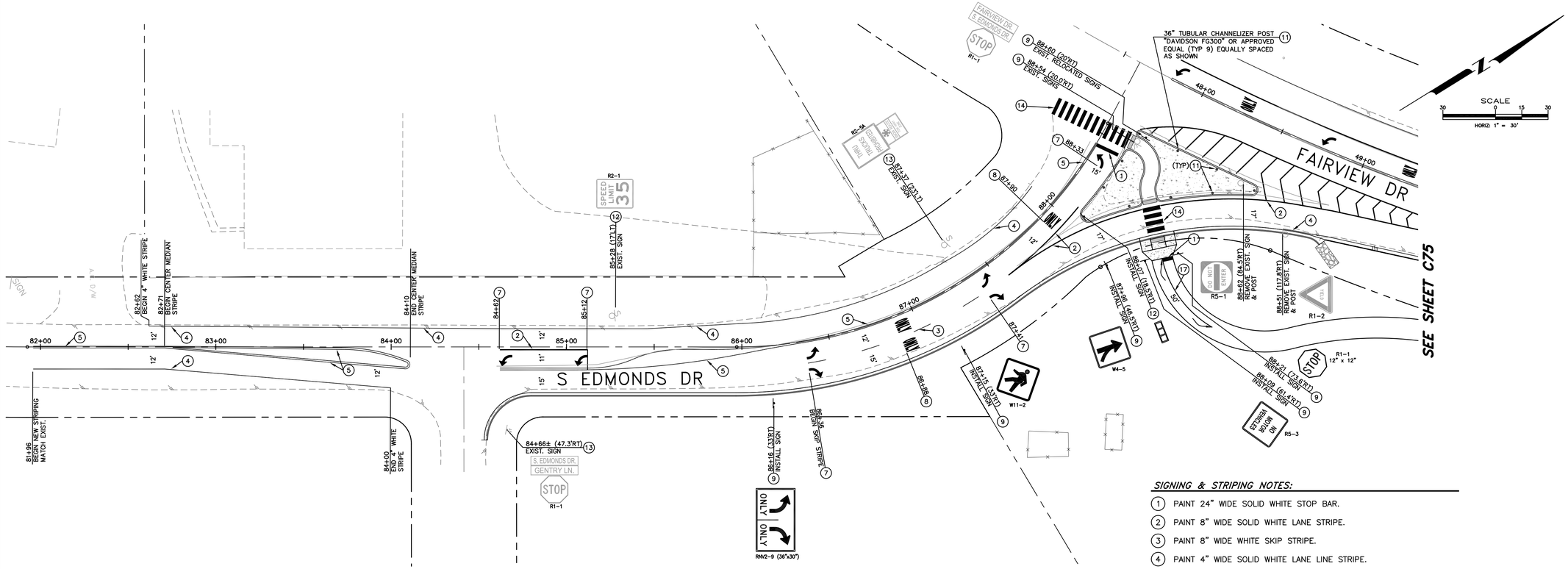

PLAN – S. EDMONDS DRIVE

SCALE: 1" = 30' HORIZ.

SIGNING & STRIPING NOTES:

1. PAINT 24" WIDE SOLID WHITE STOP BAR.
2. PAINT 8" WIDE SOLID WHITE LANE STRIPE.
3. PAINT 8" WIDE WHITE SKIP STRIPE.
4. PAINT 4" WIDE SOLID WHITE LANE LINE STRIPE.
5. PAINT 4" WIDE SOLID DOUBLE YELLOW CENTERLINE STRIPE.
6. PAINT 4" WIDE SOLID YELLOW WITH 4" YELLOW SKIP STRIPE.
7. PAINT SOLID WHITE DIRECTIONAL ARROW LEGEND AS SHOWN.
8. PAINT SOLID WHITE PAVEMENT LEGEND AS SHOWN.
9. INSTALL TRAFFIC SIGN & POST PER STD. DWG R-415.
10. OBLITERATE EXISTING PAVEMENT MARKING.
11. INSTALL 36" TUBULAR CHANNELIZER POST "DAVIDSON FG300" WITH GLUE DOWN BASE OR APPROVED EQUAL, PER MAUFACTURERS RECOMMENDATIONS.
12. INSTALL TYPE 2 OBJECT MARKER WITH GLUE DOWN BASE PER NDOT STD. DWG R-9.2.1.
13. PROTECT-IN-PLACE
14. PAINT CROSSWALK STRIPING PER STD. DWG C-5.4.3
15. PAINT MEDIAN CURB SOLID YELLOW
16. PAINT 8" WIDE SOLID YELLOW LANE CENTERLINE STRIPE.
17. PAINT 4" WIDE SOLID YELLOW LANE CENTERLINE STRIPE.

GENERAL NOTES:

1. ALL STRIPING SHALL CONFORM TO THE MANUAL ON UNIFORM TRAFFIC CONTROL DEVICES (MUTCD) FOR STREETS AND HIGHWAYS, 2009 EDITION.
2. ALL PAINTED STRIPING AND PAVEMENT LEGENDS SHALL CONFORM TO CARSON CITY STREETS DEPARTMENT SPECIFICATIONS.

DESIGNED BY: DGR/DLO
DRAWN BY: DGR/DLO
CHECKED BY: TLG
DWG NO. drawing-use and fy point map.dwg
SCALE (HORIZ): 1"=30'
SCALE (VERT): N/A
PLOT DATE: 2/3/11

CARSON CITY
PUBLIC WORKS DEPARTMENT
3505 BUTTI WAY CARSON CITY, NEVADA 89701
PH: 887-2355 FAX: 887-2112

PROFESSIONAL ENGINEER - STATE OF NEVADA
THOMAS LEON GUINN
Exp: 6-30-11
CIVIL
No. 18528

REV.	DATE	DESCRIPTION	BY	APP'D

NORTH/SOUTH WATER TRANSMISSION MAIN
PROJECT – PHASE 2
PROJECT No. 4.0800
S. EDMONDS DR. STREET IMPROVEMENTS
SIGNING & STRIPING PLAN

SHEET C74 OF 96

H:\PROJECTS\4.0800 N-S Transmission Main Phase 2\dwg\STRIPING-SE AND FV PMT MP.dwg, 2/3/11

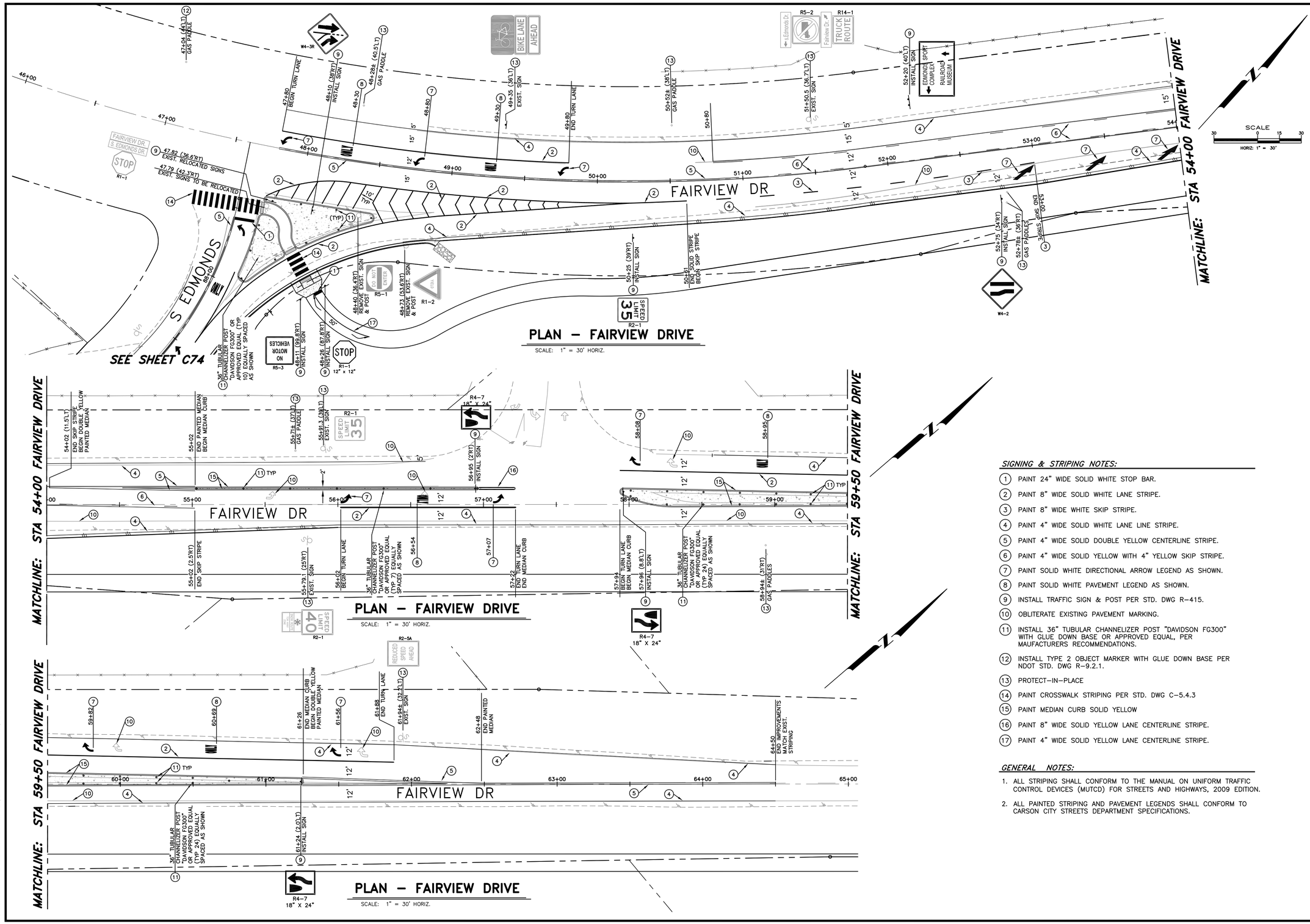

SIGNING & STRIPING NOTES:

1. PAINT 24" WIDE SOLID WHITE STOP BAR.
2. PAINT 8" WIDE SOLID WHITE LANE STRIPE.
3. PAINT 8" WIDE WHITE SKIP STRIPE.
4. PAINT 4" WIDE SOLID WHITE LANE LINE STRIPE.
5. PAINT 4" WIDE SOLID DOUBLE YELLOW CENTERLINE STRIPE.
6. PAINT 4" WIDE SOLID YELLOW WITH 4" YELLOW SKIP STRIPE.
7. PAINT SOLID WHITE DIRECTIONAL ARROW LEGEND AS SHOWN.
8. PAINT SOLID WHITE PAVEMENT LEGEND AS SHOWN.
9. INSTALL TRAFFIC SIGN & POST PER STD. DWG R–415.
10. OBLITERATE EXISTING PAVEMENT MARKING.
11. INSTALL 36" TUBULAR CHANNELIZER POST "DAVIDSON FG300" WITH GLUE DOWN BASE OR APPROVED EQUAL, PER MAUFACTURERS RECOMMENDATIONS.
12. INSTALL TYPE 2 OBJECT MARKER WITH GLUE DOWN BASE PER NDOT STD. DWG R–9.2.1.
13. PROTECT–IN–PLACE
14. PAINT CROSSWALK STRIPING PER STD. DWG C–5.4.3
15. PAINT MEDIAN CURB SOLID YELLOW
16. PAINT 8" WIDE SOLID YELLOW LANE CENTERLINE STRIPE.
17. PAINT 4" WIDE SOLID YELLOW LANE CENTERLINE STRIPE.

GENERAL NOTES:

1. ALL STRIPING SHALL CONFORM TO THE MANUAL ON UNIFORM TRAFFIC CONTROL DEVICES (MUTCD) FOR STREETS AND HIGHWAYS, 2009 EDITION.
2. ALL PAINTED STRIPING AND PAVEMENT LEGENDS SHALL CONFORM TO CARSON CITY STREETS DEPARTMENT SPECIFICATIONS.

DESIGNED BY: DGR/DLO
DRAWN BY: DGR/DLO
CHECKED BY: TLG
DWG NO. 4-0800-sig-and fv pvmt mp.dwg
SCALE (HORIZ): 1"=30'
SCALE (VERT): N/A
PLOT DATE: 2/3/11

CARSON CITY
PUBLIC WORKS DEPARTMENT
3505 BUTTI WAY CARSON CITY, NEVADA 89701
PH: 887–2355 FAX: 887–2112

PROFESSIONAL ENGINEER – STATE OF NEVADA
THOMAS LEON GUINN
Exp: 6–30–11
CIVIL
No. 18528

REV.	DATE	DESCRIPTION	BY	APP'D

NORTH/SOUTH WATER TRANSMISSION MAIN
PROJECT – PHASE 2
PROJECT No. 4.0800
FAIRVIEW DR. STREET IMPROVEMENTS
SIGNING & STRIPING PLAN

SHEET C75 OF 96

H:\PROJECTS\4.0800 N-S Transmission Main Phase 2\dwg\STRIPING-SE AND FV PVMT MP.dwg, 2/3/11

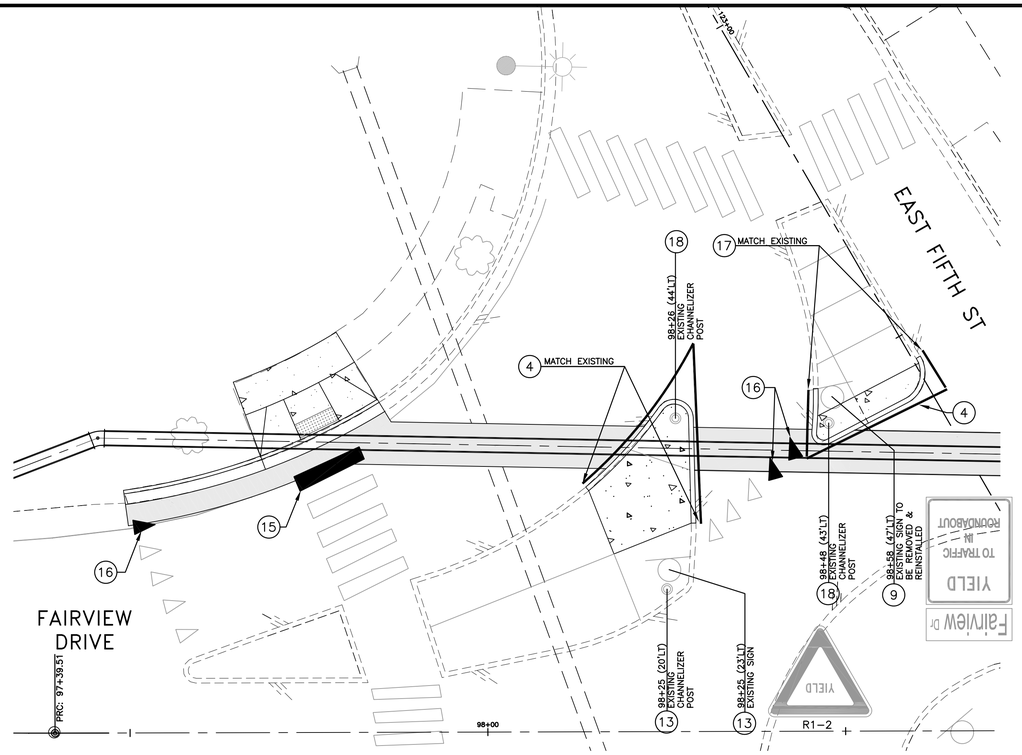

STRIPING – FAIRVIEW DRIVE & EAST FIFTH STREET SOUTHWEST CORNER & CENTER MEDIANS

SCALE: 1" = 10' HORIZ.

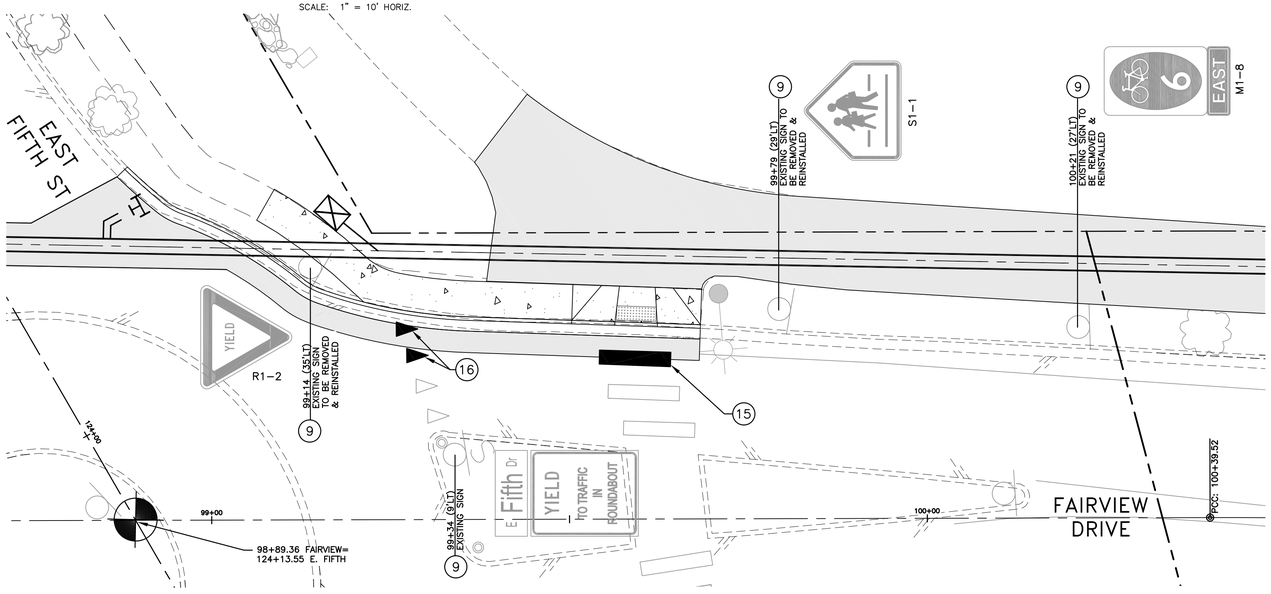

STRIPING – FAIRVIEW DRIVE & EAST FIFTH STREET NORTHWEST CORNER & PEDESTRIAN PATH

SCALE: 1" = 10' HORIZ.

SIGNING & STRIPING NOTES:

1. PAINT 24" WIDE SOLID WHITE STOP BAR.
2. PAINT 8" WIDE SOLID WHITE LANE STRIPE.
3. PAINT 8" WIDE WHITE SKIP STRIPE.
4. PAINT 4" WIDE SOLID WHITE LANE LINE STRIPE.
5. PAINT 4" WIDE SOLID DOUBLE YELLOW CENTERLINE STRIPE.
6. PAINT 4" WIDE SOLID YELLOW WITH 4" YELLOW SKIP STRIPE.
7. PAINT SOLID WHITE DIRECTIONAL ARROW LEGEND AS SHOWN.
8. PAINT SOLID WHITE PAVEMENT LEGEND AS SHOWN.
9. INSTALL TRAFFIC SIGN & POST PER STD. DWG R-415.
10. OBLITERATE EXISTING PAVEMENT MARKING.
11. INSTALL 36" TUBULAR CHANNELIZER POST "DAVIDSON FG300" WITH GLUE DOWN BASE OR APPROVED EQUAL, PER MAUFACTURERS RECOMMENDATIONS.
12. INSTALL TYPE 2 OBJECT MARKER WITH GLUE DOWN BASE PER NDOT STD. DWG R-9.2.1.
13. PROTECT-IN-PLACE
14. PAINT MEDIAN CURB SOLID YELLOW
15. PAINT CROSSWALK MARKINGS PER STD DRAWING C-5.4.3.
16. PAINT YIELD LINE MARKINGS PER STD DRAWING C-5.4.4.
17. PAINT 4" WIDE SOLID YELLOW LANE STRIPE.
18. REMOVE AND REINSTALL TUBULAR CHANNELIZER POST WITH GLUE DOWN BASE.

GENERAL NOTES:

1. ALL STRIPING SHALL CONFORM TO THE MANUAL ON UNIFORM TRAFFIC CONTROL DEVICES (MUTCD) FOR STREETS AND HIGHWAYS, 2009 EDITION.
2. ALL PAINTED STRIPING AND PAVEMENT LEGENDS SHALL CONFORM TO CARSON CITY STREETS DEPARTMENT SPECIFICATIONS.

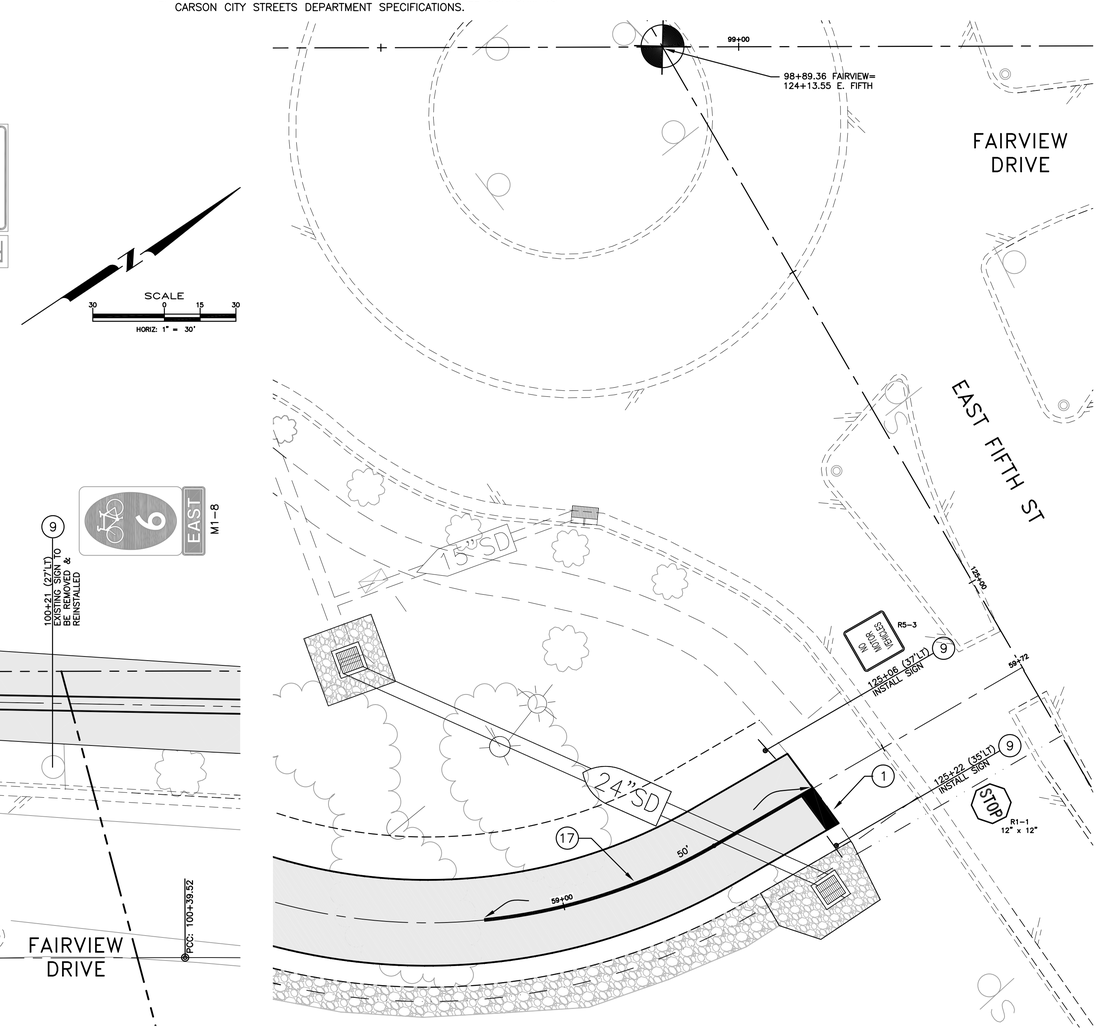

STRIPING – FAIRVIEW DRIVE & EAST FIFTH STREET SOUTHEAST CORNER

SCALE: 1" = 10' HORIZ.

DESIGNED BY: DGR/DLO
DRAWN BY: DGR/DLO
CHECKED BY: TLG
DWG NO. striping-roundabout-details.dwg
SCALE (HORIZ): 1"=10'
SCALE (VERT): N/A
PLOT DATE: 2/3/11

CARSON CITY
PUBLIC WORKS DEPARTMENT
3505 BUTTI WAY CARSON CITY, NEVADA 89701
PH: 887-2355 FAX: 887-2112

PROFESSIONAL ENGINEER – STATE OF NEVADA
THOMAS LEON GUINN
Exp: 6-30-11
CIVIL
No. 18528

REV.	DATE	DESCRIPTION	BY	APP'D

NORTH/SOUTH WATER TRANSMISSION MAIN
PROJECT – PHASE 2
PROJECT No. 4.0800
FAIRVIEW DR & EAST FIFTH ST
SIGNING & MARKING PLANS

SHEET C76 OF 96

H:\PROJECTS\4.0800 N-S Transmission Main Phase 2\dwg\STRIPING-ROUNDABOUT-DETAILS.dwg, 2/3/11

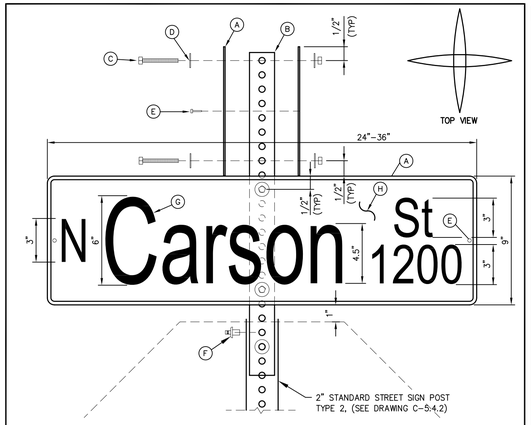

NOTES:

1. STREET NAME SIGN SHALL BE IN CONFORMANCE WITH THE LATEST EDITION OF THE M.U.T.C.D.
2. LETTERING FONT SHALL BE "HIGHWAY EM".
3. SUBMITTAL REQUIRED TO CITY FOR LONGER NAMES OR DROP LETTERS.
4. MATERIALS SHALL CONSIST OF:
   - A. (4) FLAT PLATE ALUMINUM NO. 6061-T6, .080 GAUGE.
   - B. (1) 2-FOOT LONG 1 3/4-INCH "TELESPAR" OR EQUIVALENT
   - C. (4) 2 1/2-INCH LONG, 5/16-INCH SAE GRADE 5 BOLT & NUT
   - D. (8) FLAT WASHERS
   - E. (4) 1/8-INCH DIAMETER, STEEL POP RIVET (MEDIUM LENGTH) WITH 1/8-INCH WASHER (ALUMINUM OR STEEL)
   - F. (1) 3/8-INCH DRIVE RIVET STEEL "SOUTHCO"
   - G. WHITE SHEETING – RETROREFLECTIVE ASTM IX DIAMOND GRADE VIP "3M" OR EQUIVALENT
   - H. GREEN SHEETING – TRANSPARENCY ELETRO CUT FILM 1177C "3M" OR EQUILVALENT

NO.	REVISION	DATE	STANDARD DETAIL FOR PUBLIC WORKS CONSTRUCTION	SECTION CARSON CITY
			STREET NAME SIGN AND MOUNTING	DRAWING NO. C-5.4.1
APPROVED BY:		7/09		DATE 7/2009

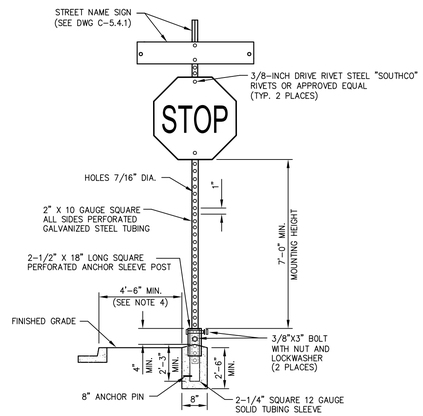

NOTES:

1. SIGN MATERIALS, CONSTRUCTION AND PLACEMENT SHALL BE IN CONFORMANCE WITH THE LATEST EDITION OF THE MANUAL ON UNIFORM TRAFFIC CONTROL DEVICES.
2. STREET NAME SIGN SHALL BE AS SPECIFIED IN STANDARD DETAIL DRAWING NO. C-5.4.1
3. ON STREETS WHERE CURBING DOES NOT EXIST, SET SIGN 6 FEET MINIMUM FROM PAVEMENT EDGE.
4. CONCRETE BASE SHALL BE LOCATED AT BACK OF SIDEWALK, UNLESS OTHERWISE DIRECTED BY THE CITY ENGINEER.
5. ALL REGULATORY SIGNS SHALL USE ASTM TYPE 3 OR 4 INTENSITY SHEETING.

NO.	REVISION	DATE	STANDARD DETAIL FOR PUBLIC WORKS CONSTRUCTION	SECTION CARSON CITY
			TRAFFIC SIGN INSTALLATION	DRAWING NO. C-5.4.2
APPROVED BY:		7/09		DATE 7/2009

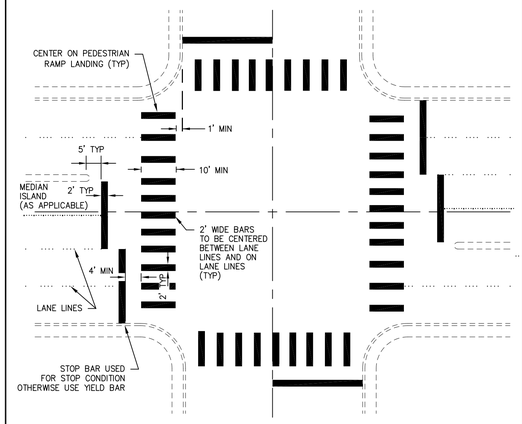

TYPICAL CROSSWALK STRIPING DETAIL

NOTES:

1. ALL STRIPING SHALL CONFORM TO THE MANUAL ON UNIFORM TRAFFIC CONTROL DEVICES (MUTCD) FOR STREETS AND HIGHWAYS, CURRENT EDITION.
2. INLAY TAPE STRIPING AND/OR PAVEMENT LEGENDS SHALL BE INSTALLED PER MANUFACTURERS RECOMMENDATIONS.
3. CROSSWALK MARKINGS SHALL BE INSTALLED AT ALL TRAFFIC SIGNAL LOCATIONS AND AT OTHER LOCATIONS AS DIRECTED BY THE CARSON CITY ENGINEER OR PUBLIC WORKS DIRECTOR.

NO.	REVISION	DATE	STANDARD DETAIL FOR PUBLIC WORKS CONSTRUCTION	SECTION CARSON CITY
			CROSSWALK LEGEND	DRAWING NO. C-5.4.3
APPROVED BY:		7/09		DATE 7/2009

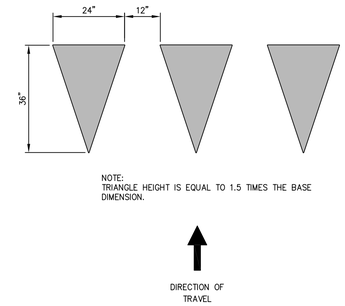

NOTES:

1. ALL STRIPING SHALL CONFORM TO THE MANUAL ON UNIFORM TRAFFIC CONTROL DEVICES (MUTCD) FOR STREETS AND HIGHWAYS, CURRENT EDITION.
2. ALL PAINTED STRIPING AND PAVEMENT LEGENDS SHALL CONFORM TO CARSON CITY PUBLIC WORKS SPECIFICATIONS.
3. ALL INLAY TAPE STRIPING AND/OR PAVEMENT LEGENDS SHALL BE INSTALLED PER MANUFACTURERS RECOMMENDATIONS.
4. YIELD LINE TO BE INSTALLED FROM EDGE OF LANE TO EDGE OF PAVEMENT OR LIP OF CURB.

NO.	REVISION	DATE	STANDARD DETAIL FOR PUBLIC WORKS CONSTRUCTION	SECTION CARSON CITY
			YIELD LINE LAYOUT	DRAWING NO. C-5.4.4
APPROVED BY:		7/09		DATE 7/2009

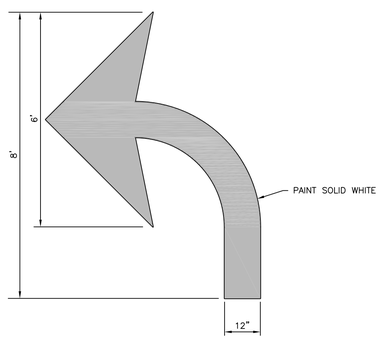

TURN ARROW PAVEMENT LEGEND (1 / C77)

NOT TO SCALE

NOTES:

1. ALL PAVEMENT MARKINGS WITHIN THE NDOT RIGHT-OF-WAY SHALL BE HOT INLAYED DURING OPEN GRADE PLACEMENT.
2. ALL STRIPING SHALL CONFORM TO THE MANUAL ON UNIFORM TRAFFIC CONTROL DEVICES (MUTCD) FOR STREETS AND HIGHWAYS, 2003 EDITION.
3. ALL PAINTED STRIPING AND PAVEMENT LEGENDS SHALL CONFORM TO CARSON CITY STREETS DEPARTMENT SPECIFICATIONS.
4. ALL INLAY TAPE STRIPING AND/OR PAVEMENT LEGENDS SHALL BE INSTALLED PER MANUFACTURERS RECOMMENDATIONS.

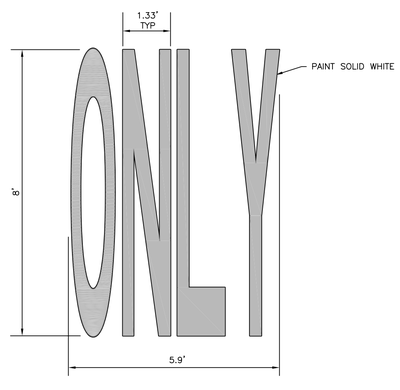

"ONLY' PAVEMENT LEGEND (2 / C77)

NOT TO SCALE

NOTES:

1. ALL PAVEMENT MARKINGS WITHIN THE NDOT RIGHT-OF-WAY SHALL BE HOT INLAYED DURING OPEN GRADE PLACEMENT.
2. ALL STRIPING SHALL CONFORM TO THE MANUAL ON UNIFORM TRAFFIC CONTROL DEVICES (MUTCD) FOR STREETS AND HIGHWAYS, 2003 EDITION.
3. ALL PAINTED STRIPING AND PAVEMENT LEGENDS SHALL CONFORM TO CARSON CITY STREETS DEPARTMENT SPECIFICATIONS.
4. ALL INLAY TAPE STRIPING AND/OR PAVEMENT LEGENDS SHALL BE INSTALLED PER MANUFACTURERS RECOMMENDATIONS.

DESIGNED BY: DGR/DLO
DRAWN BY: DGR/DLO
CHECKED BY: TLG
DWG NO.: striping-roundabout-details.dwg
SCALE (HORIZ): AS NOTED
SCALE (VERT): N/A
PLOT DATE: 2/3/11

CARSON CITY
PUBLIC WORKS DEPARTMENT
3505 BUTTI WAY CARSON CITY, NEVADA 89701
PH: 887-2355 FAX: 887-2112

PROFESSIONAL ENGINEER - STATE OF NEVADA
THOMAS LEON GUINN
Exp: 6-30-11
CIVIL
No. 18528

REV.	DATE	DESCRIPTION	BY	APP'D

NORTH/SOUTH WATER TRANSMISSION MAIN
PROJECT – PHASE 2
PROJECT No. 4.0800
FAIRVIEW DR & EAST FIFTH ST
SIGNING & MARKING DETAILS

SHEET C77 OF 96

H:\PROJECTS\4.0800 N-S Transmission Main Phase 2\dwg\STRIPING-ROUNDABOUT-DETAILS.dwg, 2/3/11

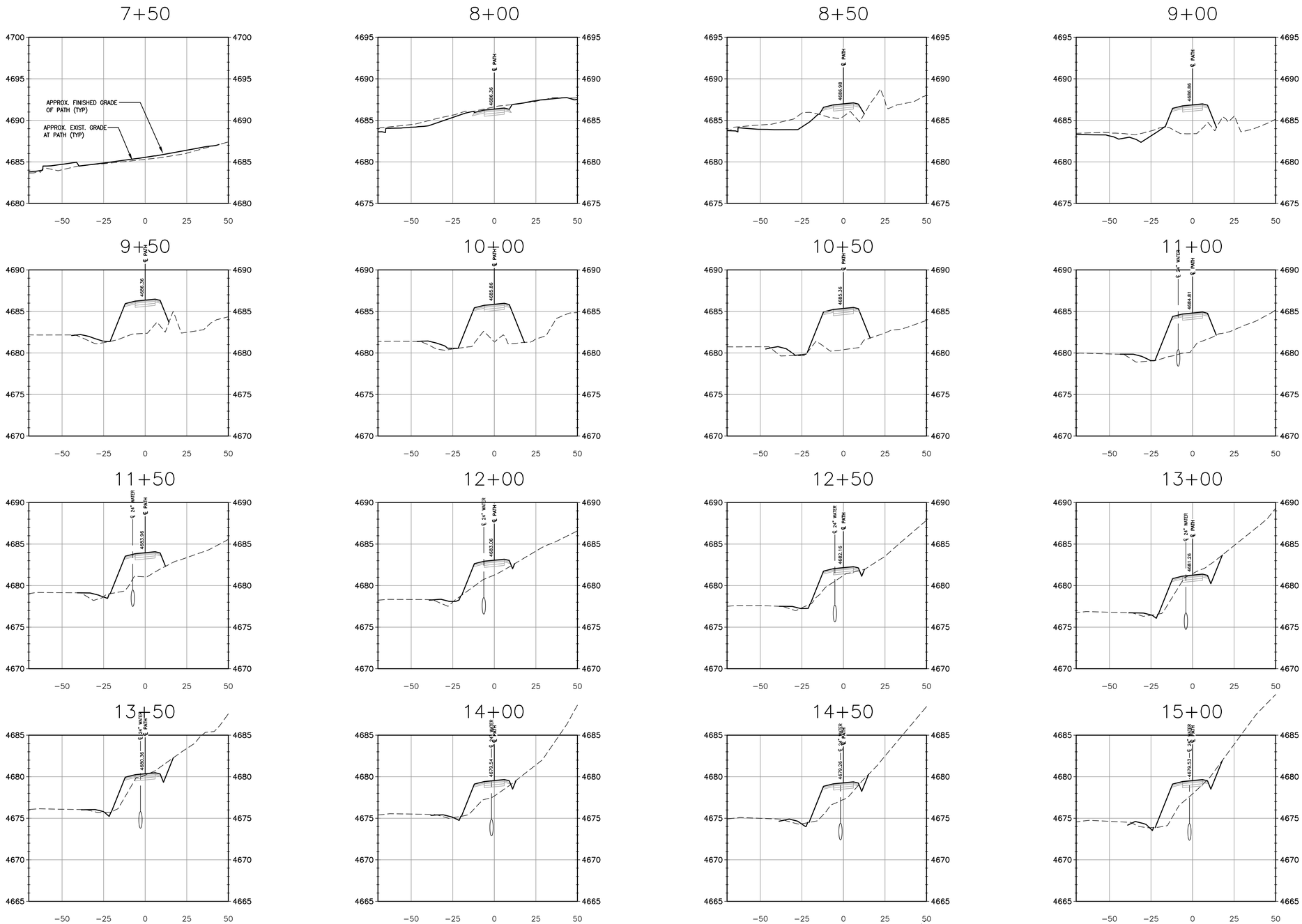

Call before you Dig
Avoid cutting underground utility lines. It's costly.
Call 811 OR 1-800-227-2600

DESIGNED BY: DGR/DLO
DRAWN BY: DGR/DLO
CHECKED BY: TLG
DWG NO.: gp-fairview x-secs.dwg
SCALE (HORIZ): 1"=30'
SCALE (VERT): 1"=6'
PLOT DATE: 2/14/11

CARSON CITY
PUBLIC WORKS DEPARTMENT
3505 BUTTI WAY CARSON CITY, NEVADA 89701
PH: 887-2355 FAX: 887-2112

PROFESSIONAL ENGINEER - STATE OF NEVADA
THOMAS LEON GUINN
Exp: 6-30-11
CIVIL
No. 18528

REV.	DATE	DESCRIPTION	BY	APP'D

NORTH/SOUTH WATER TRANSMISSION MAIN
PROJECT – PHASE 2
PROJECT No. 4.0800
FAIRVIEW DRIVE PATHWAY
CROSS SECTIONS
STA 7+50 TO STA 15+00

SHEET C78 OF 96

H:\PROJECTS\4.0800 N-S Transmission Main Phase 2\dwg\VP-FAIRVIEW X-SECS.dwg, 2/14/11

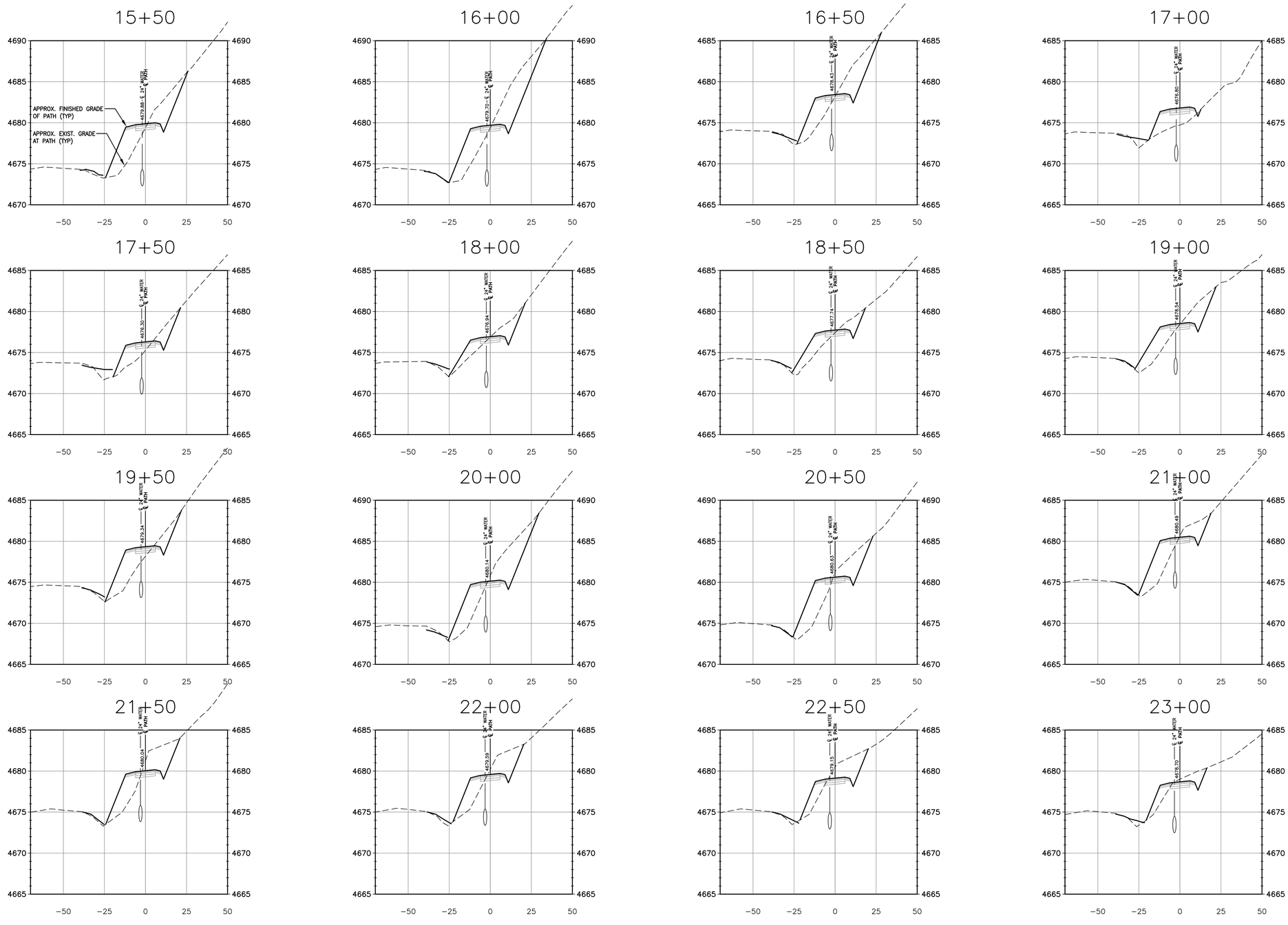

Call before you Dig
Avoid cutting underground utility lines. It's costly.
Call 811 or 1-800-227-2600

DESIGNED BY: DGR/DLO
DRAWN BY: DGR/DLO
CHECKED BY: TLG
DWG NO.: gis-fairview x-secs.dwg
SCALE (HORIZ): 1"=50'
SCALE (VERT): 1"=6'
PLOT DATE: 2/14/11

CARSON CITY
PUBLIC WORKS DEPARTMENT
3505 BUTTI WAY CARSON CITY, NEVADA 89701
PH: 887-2355 FAX: 887-2112

PROFESSIONAL ENGINEER – STATE OF NEVADA
THOMAS LEON GUINN
Exp: 6-30-11
CIVIL
No. 18528

REV.	DATE	DESCRIPTION	BY	APP'D

NORTH/SOUTH WATER TRANSMISSION MAIN
PROJECT – PHASE 2
PROJECT No. 4.0800
FAIRVIEW DRIVE PATHWAY
CROSS SECTIONS
STA 15+50 TO STA 23+00

SHEET C79 OF 96

H:\PROJECTS\4.0800 N-S Transmission Main Phase 2\dwg\PP-FAIRVIEW X-SECS.dwg, 2/14/11

23+50

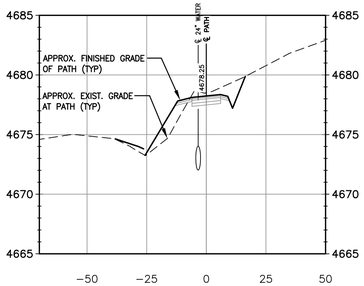

24+00

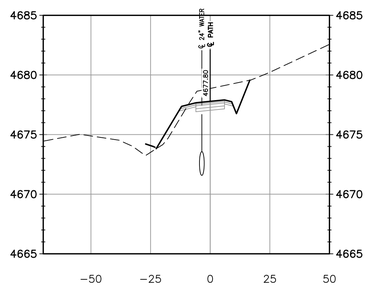

24+50

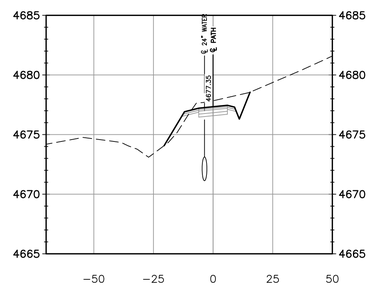

25+00

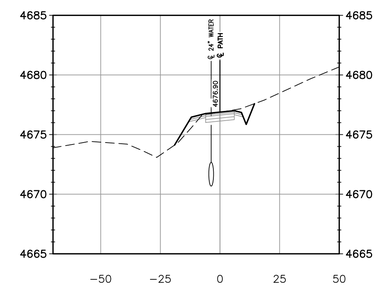

25+50

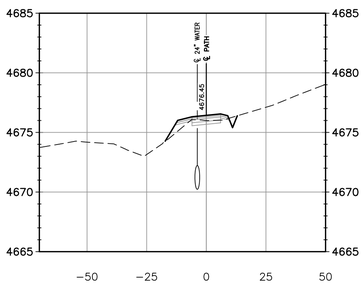

26+00

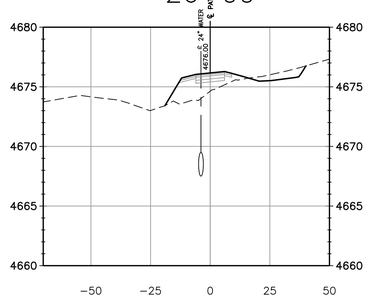

26+50

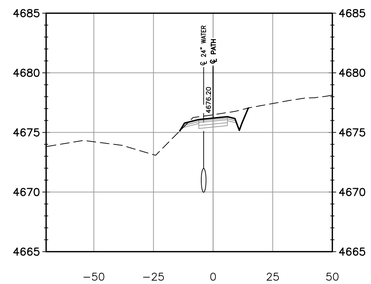

27+00

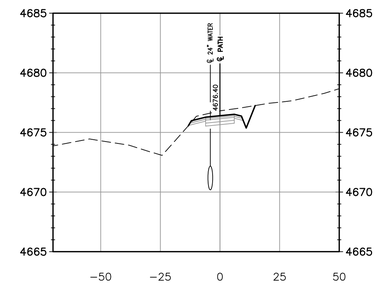

27+50

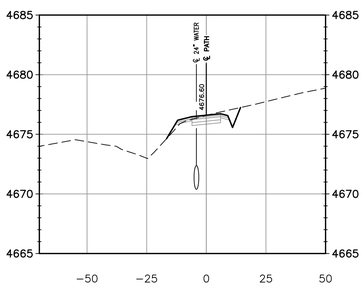

28+00

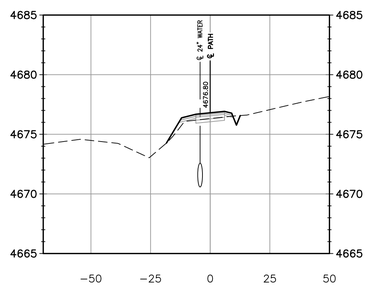

28+50

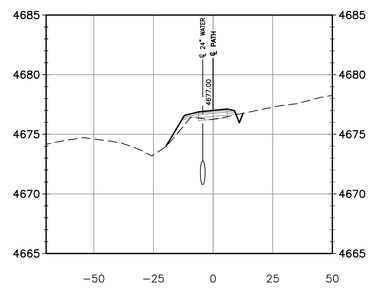

29+00

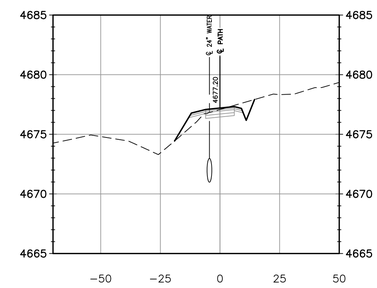

29+50

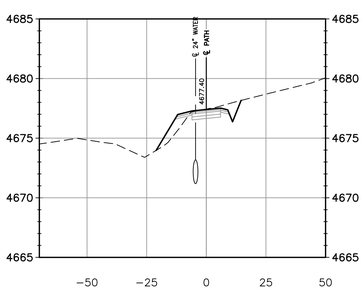

30+00

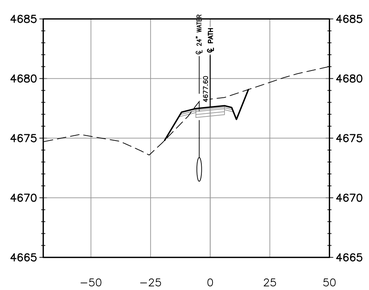

30+50

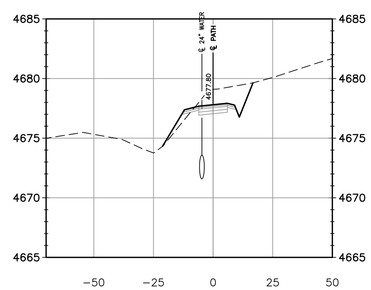

31+00

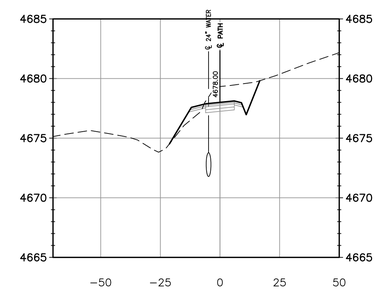

Call before you Dig
Avoid cutting underground utility lines. It's costly.
Call 811 OR 1-800-227-2600

DESIGNED BY: DGR/DLO
DRAWN BY: DGR/DLO
CHECKED BY: TLG
DWG NO.: gp-fairview x-secs.dwg
SCALE (HORIZ): 1"=50'
SCALE (VERT): 1"=6'
PLOT DATE: 2/14/11

CARSON CITY
PUBLIC WORKS DEPARTMENT
3505 BUTTI WAY CARSON CITY, NEVADA 89701
PH: 887-2355 FAX: 887-2112

PROFESSIONAL ENGINEER – STATE OF NEVADA
THOMAS LEON GUINN
Exp: 6-30-11
CIVIL
No. 18528

REV.	DATE	DESCRIPTION	BY	APP'D

NORTH/SOUTH WATER TRANSMISSION MAIN
PROJECT – PHASE 2
PROJECT No. 4.0800
FAIRVIEW DRIVE PATHWAY
CROSS SECTIONS
STA 23+50 TO STA 31+00

SHEET C80 OF 96

H:\PROJECTS\4.0800 N-S Transmission Main Phase 2\dwg\PP-FAIRVIEW X-SECS.dwg, 2/14/11

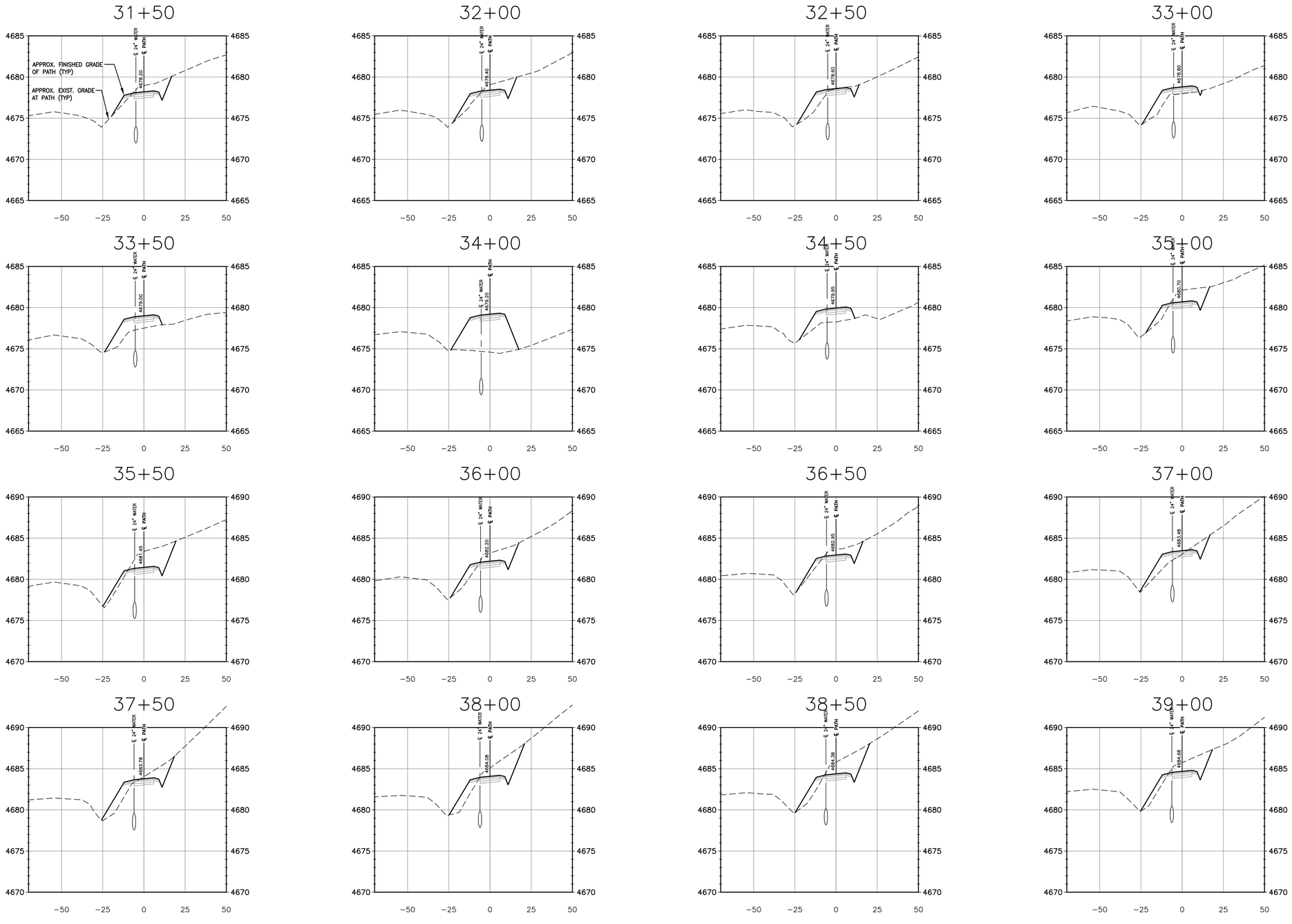

Call before you Dig
Avoid cutting underground utility lines. It's costly.
Call 811 OR 1-800-227-2600

DESIGNED BY: DGR/DLO
DRAWN BY: DGR/DLO
CHECKED BY: TLG
DWG NO.: gp-fairview x-secs.dwg
SCALE (HORIZ): 1"=30'
SCALE (VERT): 1"=6'
PLOT DATE: 2/14/11

CARSON CITY
PUBLIC WORKS DEPARTMENT
3505 BUTTI WAY CARSON CITY, NEVADA 89701
PH: 887-2355 FAX: 887-2112

PROFESSIONAL ENGINEER - STATE OF NEVADA
THOMAS LEON GUINN
Exp: 6-30-11
CIVIL
No. 18528

REV.	DATE	DESCRIPTION	BY	APP'D

NORTH/SOUTH WATER TRANSMISSION MAIN
PROJECT – PHASE 2
PROJECT No. 4.0800
FAIRVIEW DRIVE PATHWAY
CROSS SECTIONS
STA 31+50 TO STA 39+00

SHEET C81 OF 96

H:\PROJECTS\4.0800 N-S Transmission Main Phase 2\dwg\PP-FAIRVIEW X-SECS.dwg, 2/14/11

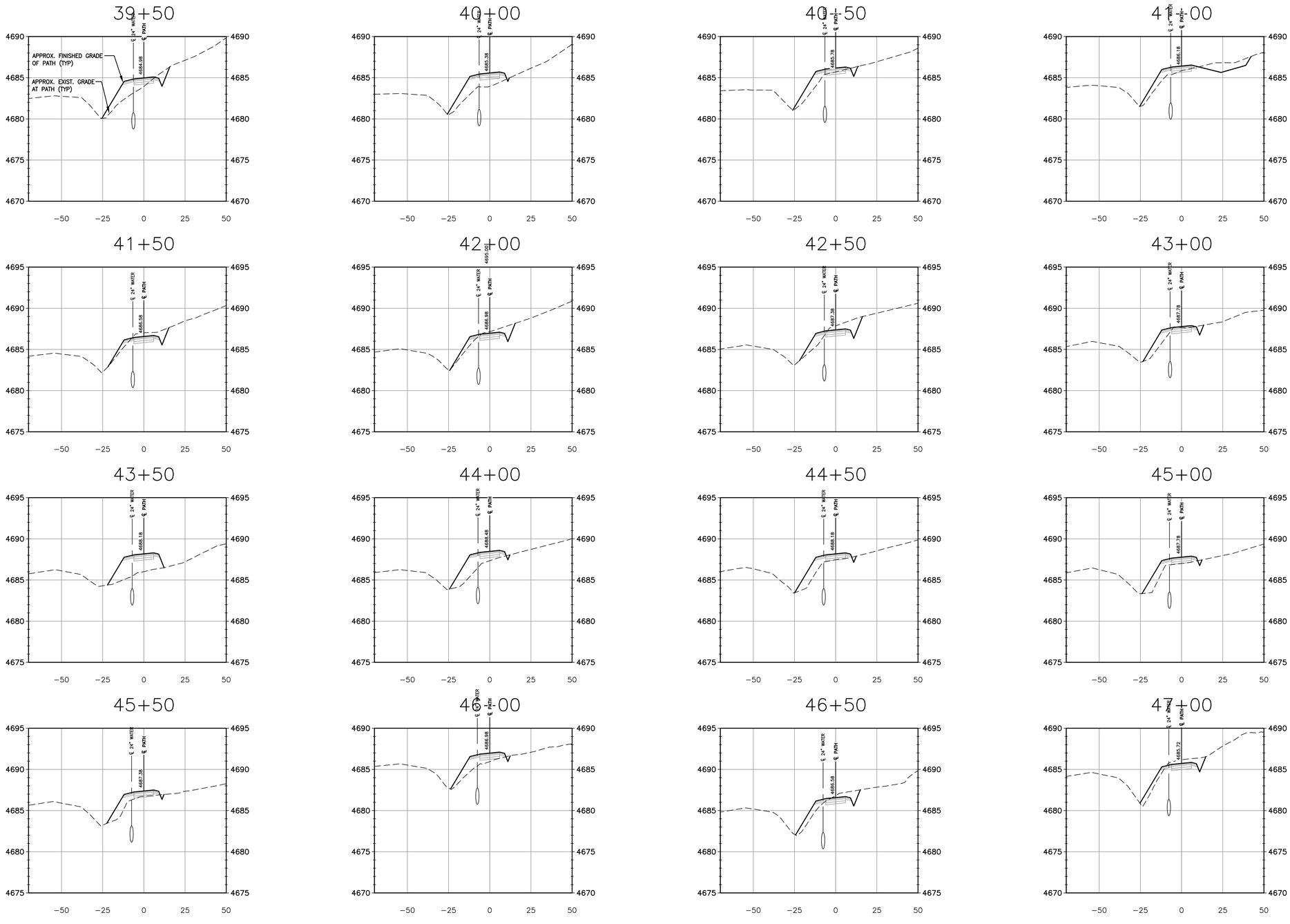

DESIGNED BY: DGR/DLO
DRAWN BY: DGR/DLO
CHECKED BY: TLG
DWG NO.: gg-fairview x-secs.dwg
SCALE (HORIZ): 1"=50'
SCALE (VERT): 1"=6'
PLOT DATE: 2/14/11

CARSON CITY
PUBLIC WORKS DEPARTMENT
3505 BUTTI WAY CARSON CITY, NEVADA 89701
PH: 887-2355 FAX: 887-2112

PROFESSIONAL ENGINEER – STATE OF NEVADA
THOMAS LEON GUINN
Exp: 6-30-11
CIVIL
No. 18528

REV.	DATE	DESCRIPTION	BY	APP'D

NORTH/SOUTH WATER TRANSMISSION MAIN
PROJECT – PHASE 2
PROJECT No. 4.0800
FAIRVIEW DRIVE PATHWAY
CROSS SECTIONS
STA 39+50 TO STA 47+00

Call before you Dig
Avoid cutting underground utility lines. It's costly.
Call 811 or 1-800-227-2600

SHEET C82 OF 96

H:\PROJECTS\4.0800 N-S Transmission Main Phase 2\dwg\PP-FAIRVIEW X-SECS.dwg, 2/14/11

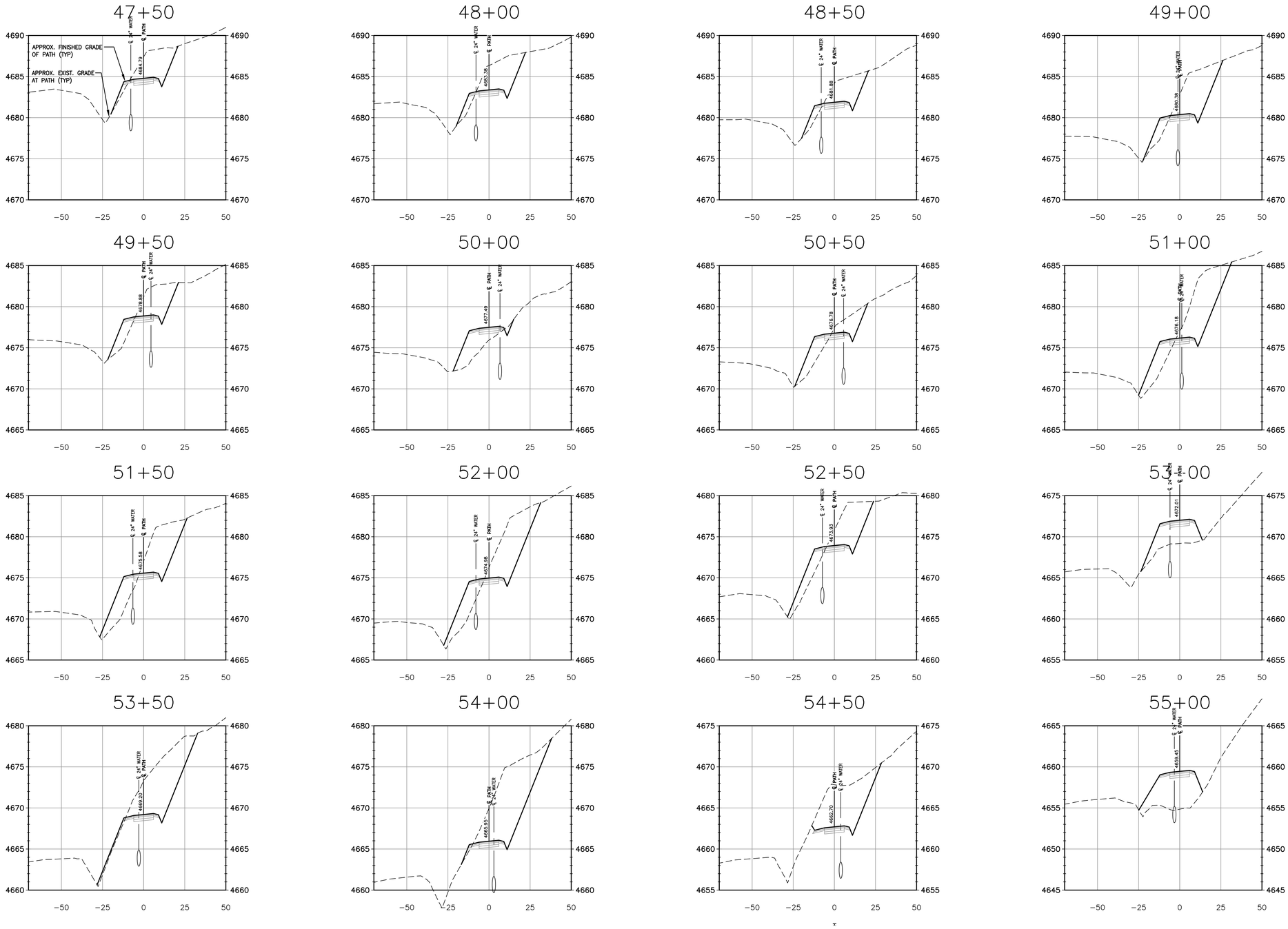

DESIGNED BY: DGR/DLO
DRAWN BY: DGR/DLO
CHECKED BY: TLG
DWG NO.: gis-fairview x-secs.dwg
SCALE (HORIZ): 1"=50'
SCALE (VERT): 1"=6'
PLOT DATE: 2/14/11

CARSON CITY
PUBLIC WORKS DEPARTMENT
3505 BUTTI WAY CARSON CITY, NEVADA 89701
PH: 887-2355 FAX: 887-2112

PROFESSIONAL ENGINEER - STATE OF NEVADA
THOMAS LEON GUINN
Exp: 6-30-11
CIVIL
No. 18528

REV.	DATE	DESCRIPTION	BY	APP'D

NORTH/SOUTH WATER TRANSMISSION MAIN
PROJECT - PHASE 2
PROJECT No. 4.0800
FAIRVIEW DRIVE PATHWAY
CROSS SECTIONS
STA 47+50 TO STA 55+00

Call before you Dig
Avoid cutting underground utility lines. It's costly.
Call 811 OR 1-800-227-2600

SHEET C83 OF 96

H:\PROJECTS\4.0800 N-S Transmission Main Phase 2\dwg\VP-FAIRVIEW X-SECS.dwg, 2/14/11

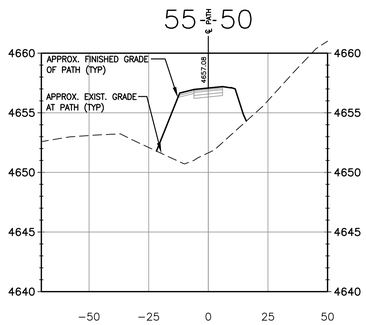

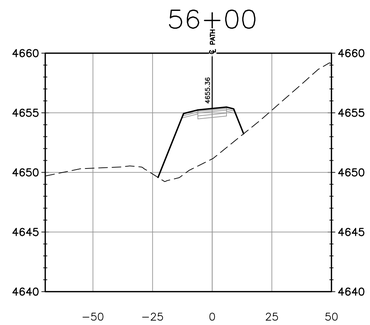

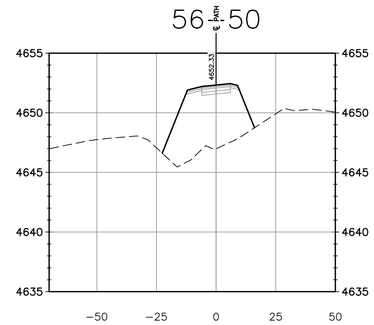

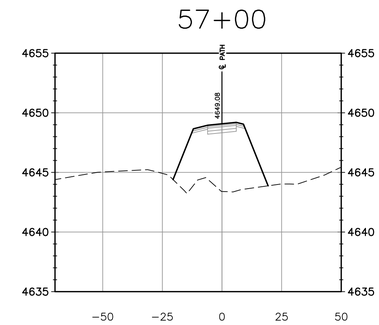

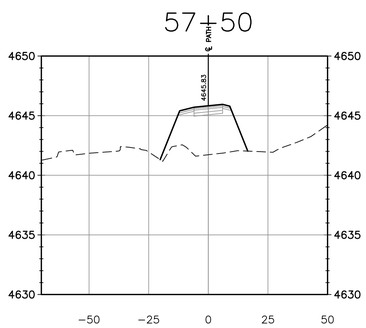

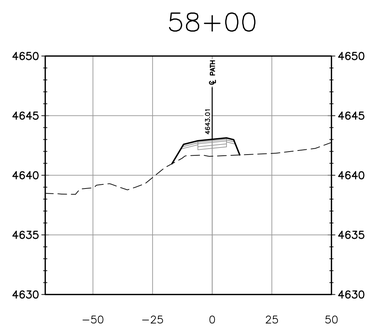

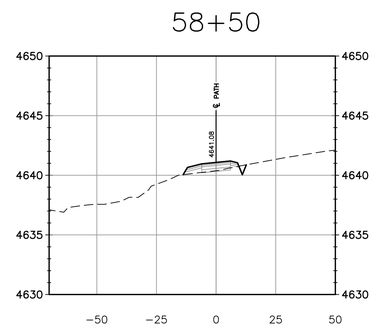

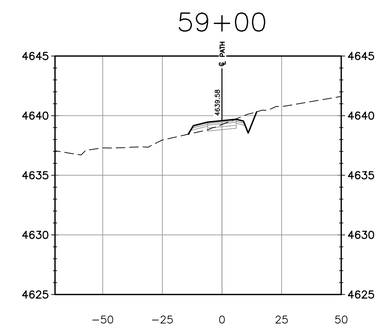

59+50

DESIGNED BY: DGR/DLO
DRAWN BY: DGR/DLO
CHECKED BY: TLG
DWG NO.: gis-fairview xsecs.dwg
SCALE (HORIZ): 1"=50'
SCALE (VERT): 1"=6'
PLOT DATE: 2/14/11

CARSON CITY
PUBLIC WORKS DEPARTMENT
3505 BUTTI WAY CARSON CITY, NEVADA 89701
PH: 887-2355 FAX: 887-2112

PROFESSIONAL ENGINEER - STATE OF NEVADA
THOMAS LEON GUINN
Exp: 6-30-11
CIVIL
No. 18528

REV.	DATE	DESCRIPTION	BY	APP'D

NORTH/SOUTH WATER TRANSMISSION MAIN
PROJECT – PHASE 2
PROJECT No. 4.0800
FAIRVIEW DRIVE PATHWAY
CROSS SECTIONS
STA 55+50 TO STA 59+00

Call before you Dig
Avoid cutting underground utility lines. It's costly.
Call 811
OR
1-800-227-2600

SHEET
C84
OF
96

H:\PROJECTS\4.0800 N-S Transmission Main Phase 2\dwg\PP-FAIRVIEW X-SECS.dwg, 2/14/11