SAFE ROUTES TO SCHOOL
ROUTE 6 PATH IMPROVEMENTS - PHASE 2

CARSON CITY, NEVADA

CARSON CITY PROJECT NUMBER: 1.0718
FEDERAL PROJECT NUMBER: MS-0025(017)

BOARD OF SUPERVISORS

Robert Crowell	Mayor
Karen Abowd	Supervisor
Shelly Aldean	Supervisor
John McKenna	Supervisor
Molly Walt	Supervisor
Alan Glover	City Clerk

DESIGNED FOR:

CARSON CITY PUBLIC WORKS DEPARTMENT
TRANSPORTATION/CAPITAL PROJECTS
3505 BUTTI WAY
CARSON CITY, NV 89701
887-2355

GENERAL NOTES:

1. ALL WORK SHALL CONFORM TO THE STANDARD SPECIFICATIONS FOR PUBLIC WORKS CONSTRUCTION, 2007 EDITION, AND THE STANDARD DETAILS FOR PUBLIC WORKS CONSTRUCTION AS ADOPTED BY CARSON CITY.
2. ALL TRAFFIC CONTROL AND BARRICADING WITHIN CARSON CITY RIGHT-OF-WAY SHALL CONFORM TO SECTION 100.33, 332.04 AND 332.05 OF THE STANDARD SPECIFICATIONS, PART VI OF THE MANUAL ON UNIFORM TRAFFIC CONTROL DEVICES, LATEST EDITION, AND THE UNR T2 CENTER TEMPORARY TRAFFIC CONTROL GUIDELINES LATEST EDITION. NO STREET CLOSURES WILL BE ALLOWED WITHOUT PRIOR APPROVAL OF A TRAFFIC CONTROL PLAN BY THE CONSTRUCTION MANAGER.
3. THE CONTRACTOR SHALL CALL UNDERGROUND SERVICE ALERT ("CALL BEFORE YOU DIG") AT 1-800-227-2600 AT LEAST 2 WORKING DAYS PRIOR TO START OF CONSTRUCTION, AND COMPLY WITH THE REQUIREMENTS OF NAC CHAPTER 455 – EXCAVATION AND DEMOLITIONS.
4. THE LOCATION OF EXISTING UTILITIES SHOWN ON THESE DRAWINGS IS BASED ON THE BEST INFORMATION AVAILABLE TO THE ENGINEER. IT SHALL BE THE CONTRACTORS' RESPONSIBILITY TO VERIFY THESE LOCATIONS AT THE PROPOSED POINTS OF CONNECTIONS AND IN AREAS OF POSSIBLE CONFLICT WITH NEW UTILITY INSTALLATION, PRIOR TO BEGINNING CONSTRUCTION. POTHOLING IS REQUIRED. SHOULD THE CONTRACTOR FIND ANY DISCREPANCIES BETWEEN THE CONDITIONS EXISTING IN THE FIELD AND THE INFORMATION SHOWN ON THESE DRAWINGS, HE SHALL NOTIFY THE ENGINEER BEFORE PROCEEDING WITH CONSTRUCTION.
5. THE CONTRACTOR WILL BE SOLELY AND COMPLETELY RESPONSIBLE FOR THE CONDITIONS OF THE JOB SITE, INCLUDING SAFETY OF ALL PERSONS AND PROPERTY DURING PERFORMANCE OF THE WORK. THIS REQUIREMENT WILL APPLY CONTINUOUSLY AND NOT BE LIMITED TO NORMAL WORKING HOURS. THE CONTRACTOR SHALL BE RESPONSIBLE FOR THE DESIGN AND CONSTRUCTION OF PROPER SHORING OF TRENCHES IN ACCORDANCE WITH OCCUPATIONAL SAFETY LAWS. THE DUTIES OF THE ENGINEER DO NOT INCLUDE REVIEW OF THE ADEQUACY OF THE CONTRACTOR'S SAFETY IN, ON, OR NEAR THE CONSTRUCTION SITE.
6. SHOULD IT APPEAR THAT THE WORK TO BE DONE, OR ANY MATTER RELATIVE THERETO, IS NOT SUFFICIENTLY DETAILED OR EXPLAINED ON THESE PLANS, THE CONTRACTOR SHALL CONTACT THE PROJECT ENGINEER FOR SUCH FURTHER EXPLANATIONS AS MAY BE NECESSARY.
7. THE CONTRACTOR SHALL CALL THE CARSON CITY CONSTRUCTION MANAGER (887-2355) AT LEAST 2 WORKING DAYS PRIOR TO THE START OF CONSTRUCTION.
8. MODIFICATIONS TO THE APPROVED PLANS REQUIRES REVIEW AND APPROVAL BY CARSON CITY PROJECT ENGINEER. WORK PERFORMED WITHOUT WRITTEN APPROVAL BY THE PROJECT ENGINEER WILL REQUIRE REMOVAL AT THE CONTRACTORS EXPENSE.
9. THE APPROVED PLAN, PERMIT AND INSPECTION RECORD MUST BE ON THE JOB SITE AT ALL TIMES.
10. PLAN APPROVAL SHALL EXPIRE ONE YEAR FROM DATE OF APPROVAL UNLESS CONSTRUCTION HAS BEEN INITIATED. (CCMC 12.06.180F,12.01.140D)

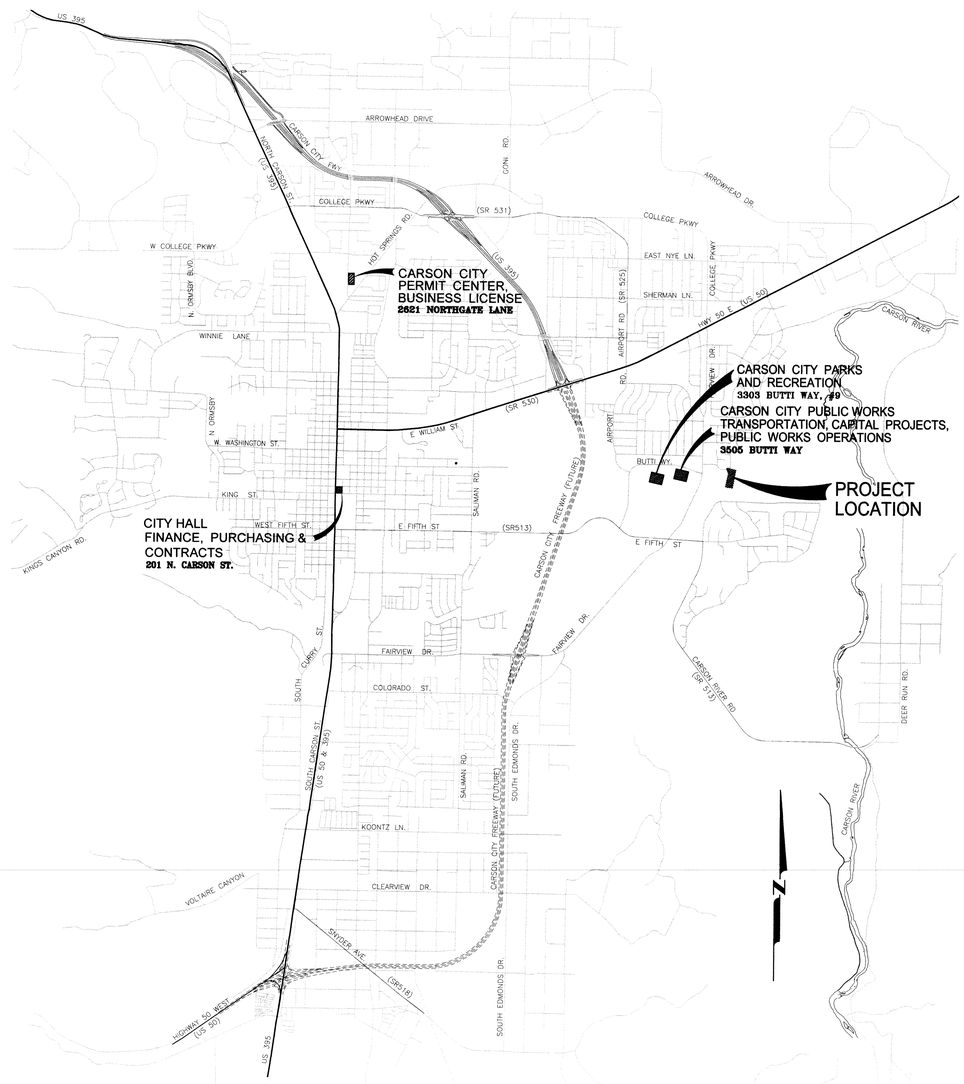

VICINITY MAP

N.T.S.

SHEET INDEX

1	TITLE SHEET
2	SHEET INDEX & ABBREVIATIONS
3	STORMWATER PROTECTION PLAN
4	PLAN & PROFILE STA "E" 3+00 to STA "E" 9+72.62
5	PLAN & PROFILE STA "T" 200+00 to STA "T" 204+77
6	SECTIONS
7	CONSTRUCTION DETAILS
8	CONSTRUCTION DETAILS

CALL BEFORE YOU DIG 1-800-227-2600 UNDERGROUND SERVICE ALERT

APPLICATION NO. 10-1029

DESIGNED BY: BD
DRAWN BY: BD
CHECKED BY: RF
DWG NO.: 1-0718PHASE2TS1
SCALE (HORIZ): NA
SCALE (VERT): NA
PLOT DATE: FEB 09, 2011

CARSON CITY
PUBLIC WORKS DEPARTMENT
3505 BUTTI WAY CARSON CITY, NEVADA 89701
PH: 887-2355 FAX: 887-2112

STATE OF NEVADA
REGISTERED PROFESSIONAL ENGINEER
CIVIL
NO. 12497
6/30/11
4/15/11

REV.	DATE	DESCRIPTION	BY	APP'D

SAFE ROUTES TO SCHOOL
ROUTE 6 PATH IMPROVEMENTS – PHASE 2
PROJECT No. 1.0718

TITLE SHEET

SHEET 1 OF 8

FOR BIDDING ONLY

NDOT#73596

FED#MS-0025(017)

H:\Projects\1.0718 multi-use path (mg-route6-PHASE2\dwg\1-0718-ph2TS1.dwg, TITLE-SHT1, 2/9/2011 3:19:19 PM, BDoyo

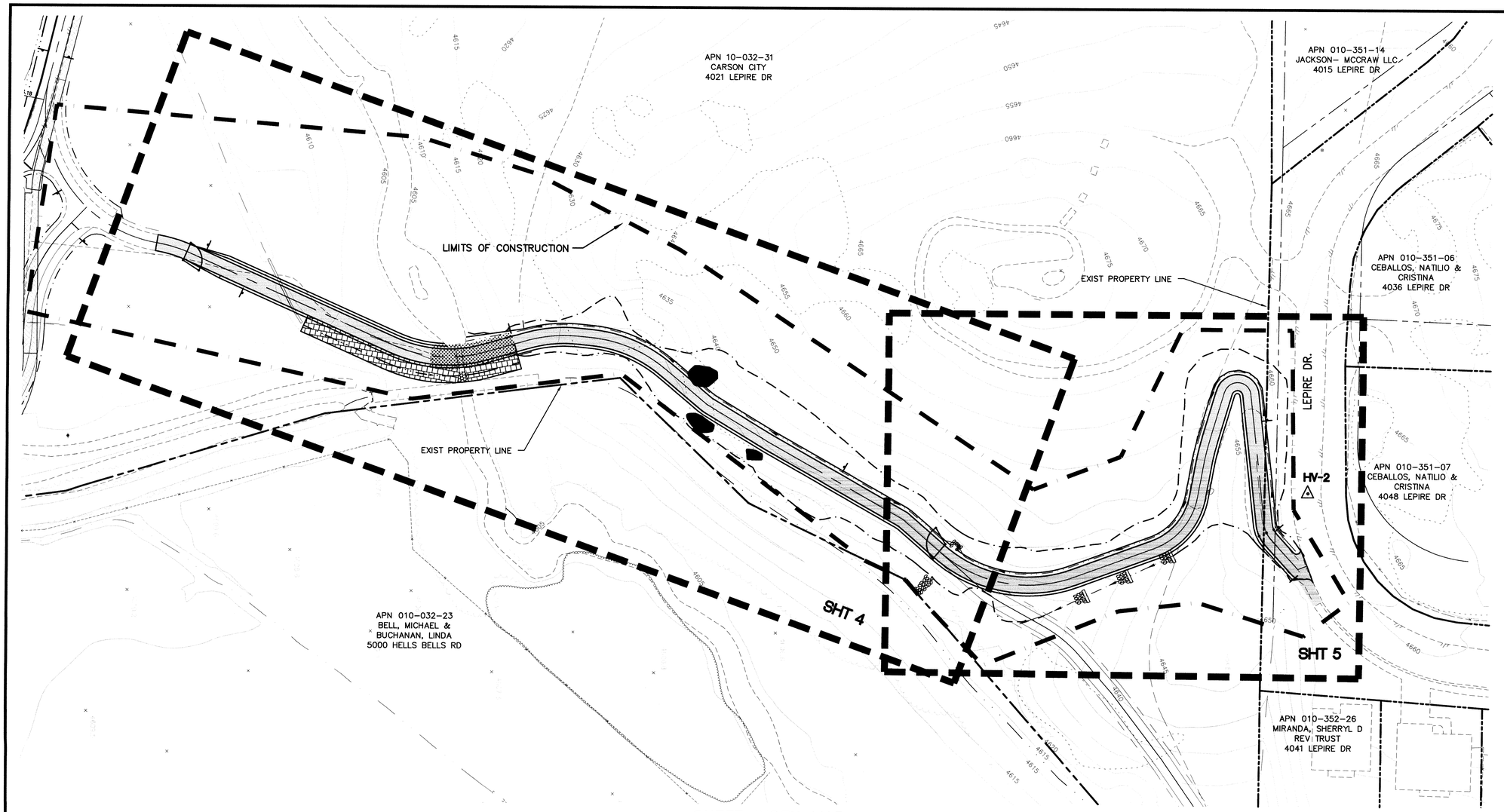

SHEET INDEX MAP

SCALE: 1" = 40'

ABBREVIATIONS

AB	AGGREGATE BASE	FG	FINISH GRADE	N	NORTH	SD	STORM DRAIN
AC	ASPHALTIC CONCRETE	FL	FLOWLINE	(N)	NEW	SDMH	STORM DRAIN MANHOLE
ACP	ASBESTOS CEMENT PIPE	F	FEET	N.I.C.	NOT IN CONTRACT	SDR	STANDARD DIMENSION RATIO
ADJ	ADJUST	G	GAS	NTS	NOT TO SCALE	SF	SQUARE FEET
APN	ASSESSORS PARCEL NUMBER	GS	GAS SERVICE	OGL	ORIGINAL GROUND LINE	SHT	SHEET
ASSY	ASSEMBLY	GRD	GRADE	POC	POINT OF CURVATURE	SS	SANITARY SEWER
ASTM	AMERICAN SOCIETY FOR TESTING MATERIALS	GV	GAS VALVE/GATE VALVE	PCC	PORTLAND CEMENT CONCRETE	SSMH	SANITARY SEWER MANHOLE
BVC	BEGIN VERTICAL CURVE	HGL	HYDRAULIC GRADE LINE	PE	PROFESSIONAL ENGINEER	STA	STATION
CATV	CABLE TV	HORIZ	HORIZONTAL	PE	POLYETHYLENE	STL	STEEL
CB	CATCH BASIN	HP	HIGH POINT	PI	POINT OF INTERSECTION	SVC	SERVICE
CI	CAST IRON	IE, INV	INVERT ELEVATION	PL	PROPERTY LINE	T, TELE	TELEPHONE
CL	CENTER LINE, CLASS	INTX	INTERSECTION	PLS	PROFESSIONAL LAND SURVEYOR	TOC	TOP OF CURB
CO	CLEAN OUT	IRR, IRRG	IRRIGATION LINE	PRV	PRESSURE REDUCING VALVE	TYP	TYPICAL
CONC	CONCRETE	JCT	JUNCTION	PT	POINT OF TANGENCY	U/G	UNDERGROUND
C&G	CURB & GUTTER	L	LENGTH	PVC	POLYVINYLCHLORIDE	UGE	UNDERGROUND ELECTRIC
DI	DROP INLET	LAT	LATERAL	PVI	POINT OF VERTICAL INTERSECTION	UN	UNLESS NOTED
DTL	DETAIL	LF	LINEAL FEET	PVMT	PAVEMENT	VC	VERTICAL CURVE
DIA, ø	DIAMETER	LT	LEFT	Q	FLOW (CFS)	VG	VALLEY GUTTER
EX	EXISTING	MAX	MAXIMUM	R	RADIUS	VERT	VERTICAL
E	EAST	MDD	MAXIMUM DRY DENSITY	RCH	REACH	W	WEST, WATER
EA	EACH	MH	MANHOLE	RCP	REINFORCED CONCRETE PIPE	W/	WITH
EL, ELEV	ELEVATION	MJ	MECHANICAL JOINT	ROW	RIGHT OF WAY	W/O	WITHOUT
EP	EDGE OF PAVEMENT	MIN	MINIMUM	RT	RIGHT	WS	WATER SERVICE
EVC	END VERTICAL CURVE	MMD	MAXIMUM MARSHAL DENSITY	S	SLOPE, SOUTH	WV	WATER VALVE

BASIS OF BEARING, COORDINATES AND ELEVATION:

THE BASIS OF BEARING FOR THIS PROJECT IS THE LINE BETWEEN "HV-1" (N 1610887.22 E 174022.74) THE CENTERLINE MONUMENT "PLS 6304" LOCATED ON AIRPORT ROAD APPROXIMATELY 140' SOUTH OF THE INTERSECTION OF DESATOYA WAY AND "HV-2" (N 1610523.8000 E 177704.69) THE CENTERLINE MONUMENT ON LEPIRE DR APPROXIMATELY 575' SOUTH OF THE INTERSECTION OF SUNDANCE COURT. HAVING A BEARING OF S84°21'47"E AND DISTANCE OF 3699.84'.

THE BASIS OF ELEVATION FOR THIS PROJECT IS "HV-2"
ELEV=4661.37

PROPERTY LINE DISCLAIMER:

THE PROPERTY LINES AND RIGHT-OF-WAY LINES DESIGNATED ON THESE PLAN SHEETS WERE OBTAINED FROM CARSON CITY ASSESSOR MAPS AND ARE SHOWN FOR ILLUSTRATIVE PURPOSES ONLY. THEY DO NOT REPRESENT A BOUNDARY SURVEY, NO LIABILITY IS ASSUMED AS TO THE SUFFICIENCY OR ACCURACY OF THE PARCEL LINE DATA SHOWN ON THESE PLAN SHEETS.

NOTE:

THE CONTRACTOR SHALL BE HELD RESPONSIBLE TO REPLACE ALL EXISTING PERMANENT SURVEY CONTROL MONUMENTS WHICH ARE DAMAGED OR DISTURBED DUE TO HIS CONSTRUCTION EFFORTS. SURVEY CONTROL MONUMENTS SHALL BE (CLASS A MONUMENTS) INSTALLED PER SSPWC STANDARD DRAWING 1-27. THE RE-ESTABLISHMENT OF SURVEY MONUMENTS SHALL BE COMPLETED BY A NEVADA LICENSED PROFESSIONAL LAND SURVEYOR.

CALL BEFORE YOU DIG
1-800-227-2600
UNDERGROUND SERVICE ALERT

DESIGNED BY: BD
DRAWN BY: BD
CHECKED BY: RF
DWG NO.: 1-0718sh2BS1
SCALE (HORIZ): AS SHOWN
SCALE (VERT): AS SHOWN
PLOT DATE: FEB 09, 2011

CARSON CITY
PUBLIC WORKS DEPARTMENT
3505 BUTTI WAY CARSON CITY, NEVADA 89701
PH: 887-2355 FAX: 887-2112

PROFESSIONAL ENGINEER - STATE OF NEVADA
ROBERT D. FELLOWS
Exp: 6/30/11
CIVIL
No. 12497
4/15/11

REV.	DATE	DESCRIPTION	BY	APP'D

SAFE ROUTES TO SCHOOL
ROUTE 6 PATH IMPROVEMENTS - PHASE 2
PROJECT No. 1.0718
SHEET INDEX

SHEET 2 OF 8

NDOT#73596 FED#MS-0025(017)

FOR BIDDING ONLY

H:\Projects\1-0718 multi-use path img-route6-PHASE2\dwg\1-0718-grp2bs1.dwg, mdx, 2/9/2011 3:47:17 PM, BDoyal

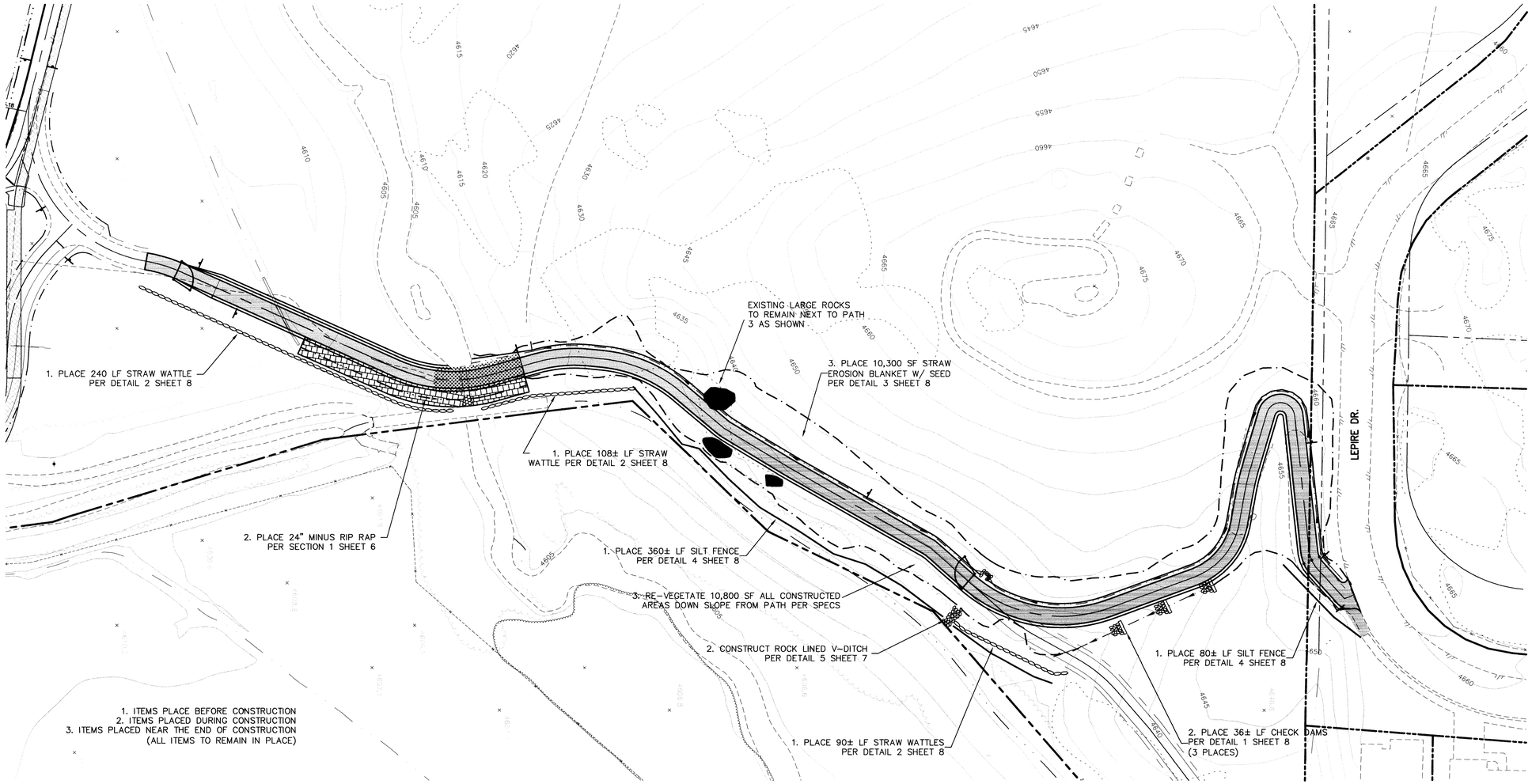

STORMWATER PROTECTION PLAN

SCALE: 1" = 40'

STORM WATER NOTES:

1. THE CONTRACTOR WILL BE SOLELY AND COMPLETELY RESPONSIBLE FOR ACQUIRING A STORMWATER DISCHARGE PERMIT FROM THE NEVADA DIVISION OF ENVIRONMENTAL PROTECTION (NDEP) INCLUDING DEVELOPING, SUBMITTING AND IMPLEMENTING A STORM WATER POLLUTION PREVENTION PLAN (SWPPP). THE CONTRACTOR SHALL DEVELOP, PLACE AND MAINTAIN STORM WATER PROTECTION DEVICES IN COMPLIANCE WITH THE NEVADA CONTRACTORS FIELD GUIDE FOR CONSTRUCTION SITE BEST MANAGEMENT PRACTICES (JUNE 2008).
2. ALL DISTURBED SOILS SHALL BE RESEEDED UPON COMPLETION OF CONSTRUCTION UNLESS OTHERWISE SPECIFIED.

CALL BEFORE YOU DIG 1-800-227-2600 UNDERGROUND SERVICE ALERT

DESIGNED BY: BD
DRAWN BY: BD
CHECKED BY: RF
DWG NO.: 1-0718sh2BS1
SCALE (HORIZ): AS SHOWN
SCALE (VERT): AS SHOWN
PLOT DATE: FEB 09, 2011

CARSON CITY
PUBLIC WORKS DEPARTMENT
3505 BUTTI WAY CARSON CITY, NEVADA 89701
PH: 887-2355 FAX: 887-2112

PROFESSIONAL ENGINEER STATE OF NEVADA
ROBERT D. FELLOWS
Exp: 6/30/11
CIVIL
No. 12497
4/15/11

REV.	DATE	DESCRIPTION	BY	APP'D

SAFE ROUTES TO SCHOOL
ROUTE 6 PATH IMPROVEMENTS - PHASE 2
PROJECT No. 1.0718

STORMWATER PROTECTION PLAN

SHEET 3 OF 8

NDOT#73596 FED#MS-0025(017)

FOR BIDDING ONLY

H:\Projects\1.0718 multi-use path imp-route6-PHASE2\dwg\-0718-sh2bs1.dwg, SWPP2, 2/9/2011 3:52:34 PM, BDpyd

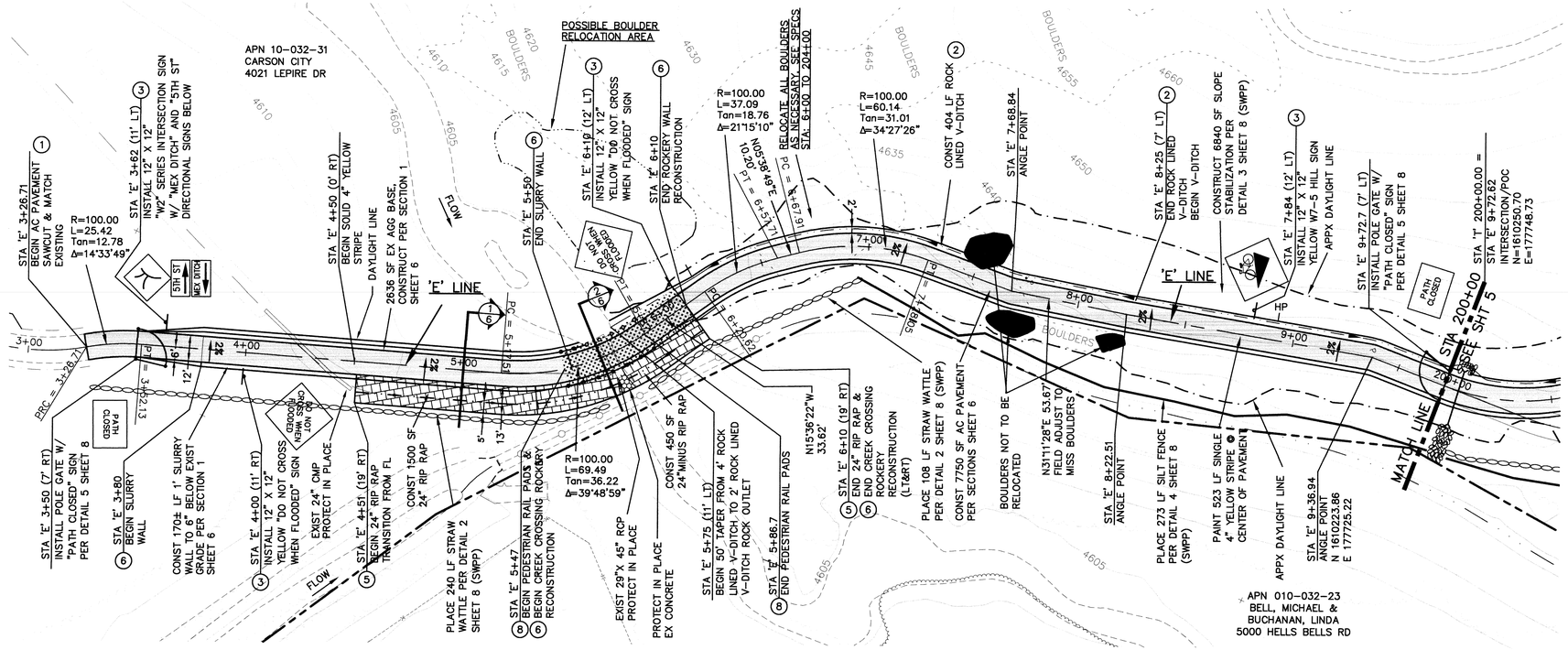

PLAN – 'E' MULTI-USE PATH

SCALE: 1" = 30' HORIZ.

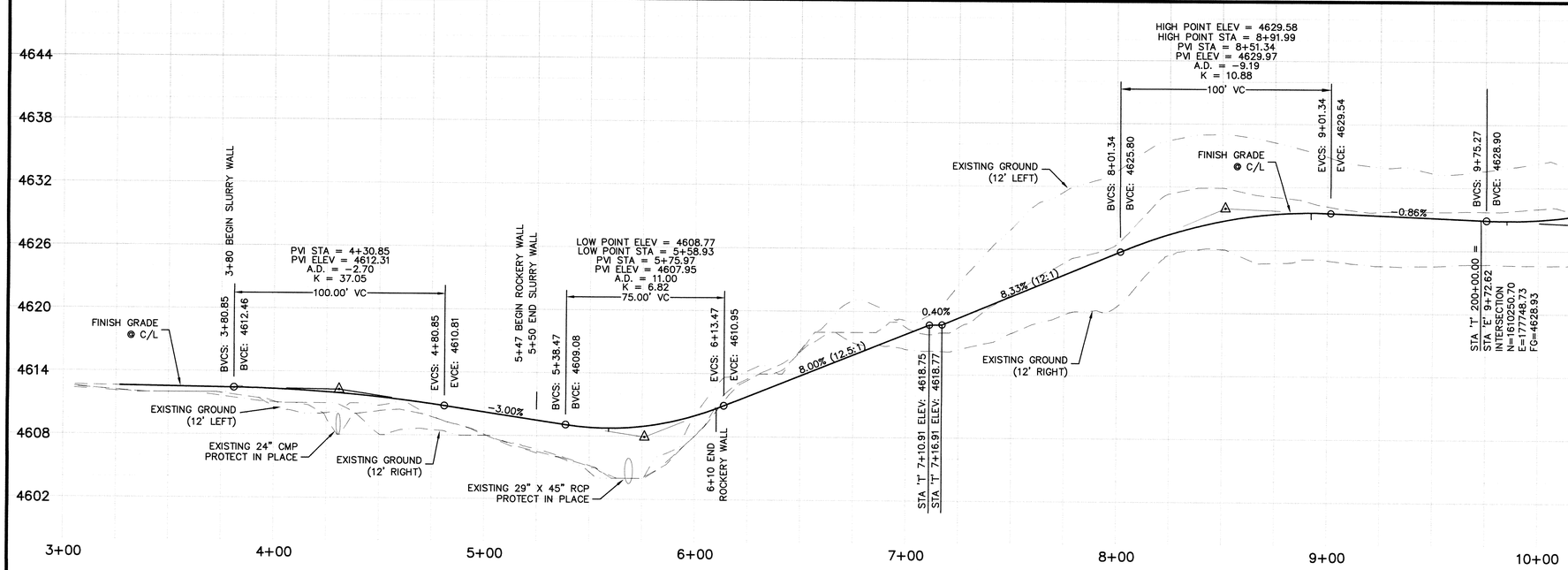

PROFILE – 'E' MULTI-USE PATH

SCALE: 1" = 30' HORIZ.
1" = 3' VERT.

CONSTRUCTION NOTES:

1. CONSTRUCT 12' MULTI-USE AC PAVEMENT PATH PER SECTIONS ON SHEETS 6 AND 7.
2. CONSTRUCT ROCK LINED V-DITCH PER DETAIL 5 SHEET 7.
3. INSTALL SIGN PER DETAIL 3 SHEET 7.
4. INSTALL 15" CMP SD W/ FES PER TRENCH EXCAVATION DETAIL ON SHEET 7.
5. PLACE 24" RIP RAP PER SECTION 1 SHEET 6.
6. CONSTRUCT SUBGRADE RECONSTRUCTION PER SECTION 2 SHEET 6.
7. INSTALL REMOVABLE BOLLARD PER DETAIL 4 SHEET 7.
8. INSTALL PEDESTRIAN RAIL PADS (6.13' O.C. @ 14' LT) & (7.2' O.C. @ 14' RT) PER DETAIL 2 PAGE 7.

DESIGNED BY: BD
DRAWN BY: BD
CHECKED BY: RF
DWG NO.: 1-0718ph2BS1
SCALE (HORIZ): AS SHOWN
SCALE (VERT): AS SHOWN
PLOT DATE: FEB 09, 2011

CARSON CITY
PUBLIC WORKS DEPARTMENT
3505 BUTTI WAY CARSON CITY, NEVADA 89701
PH: 887-2355 FAX: 887-2112

REGISTERED PROFESSIONAL ENGINEER STATE OF NEVADA
ROBERT D. FELLOWS
Exp: 6/30/11
CIVIL
No. 12497
4/15/11

REV.	DATE	DESCRIPTION	BY	APP'D

SAFE ROUTES TO SCHOOL
ROUTE 6 PATH IMPROVEMENTS – PHASE 2
PROJECT No. 1.0718

PLAN & PROFILE
STA 'E' 3+00 to STA 'E' 9+72.62

SHEET 4 OF 8

NDOT#73596 FED#MS-0025(017)

FOR BIDDING ONLY

H:\Projects\1.0718 multi-use path imp-route6-PHASE2\dwg\1-0718-ph2bs1.dwg, E-34*20, 2/9/2011 4:32:52 PM, BDoyal

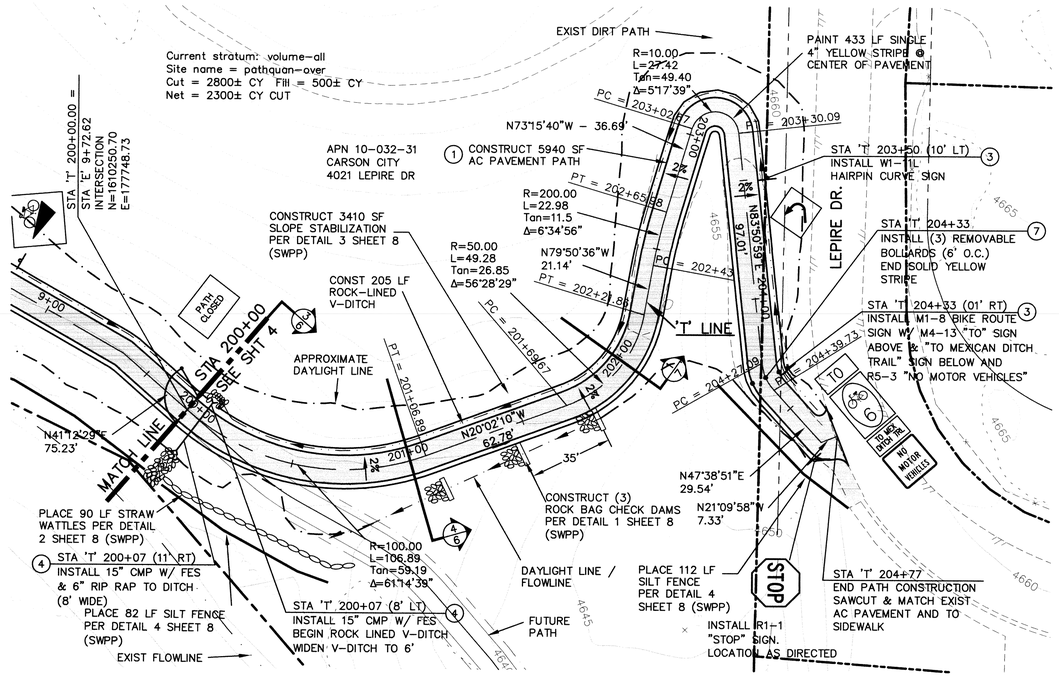

PLAN – 'T' MULTI-USE PATH

SCALE: 1" = 30' HORIZ.

CONSTRUCTION NOTES:

1. CONSTRUCT 12' MULTI-USE AC PAVEMENT PATH PER SECTIONS ON SHEETS 6 AND 7.
2. CONSTRUCT ROCK LINED V-DITCH PER DETAIL 5 SHEET 7.
3. INSTALL SIGN PER DETAIL 3 SHEET 7.
4. INSTALL 15" CMP SD W/ FES PER TRENCH EXCAVATION DETAIL ON SHEET 7.
5. PLACE 24" RIP RAP PER SECTION 1 SHEET 6.
6. CONSTRUCT SUBGRADE RECONSTRUCTION PER SECTION 2 SHEET 6.
7. INSTALL REMOVABLE BOLLARD PER DETAIL 4 SHEET 7.
8. INSTALL PEDESTRIAN RAIL PADS (6.13' O.C. @ 14' LT) & (7.2' O.C. @ 14' RT) PER DETAIL 2 PAGE 7.

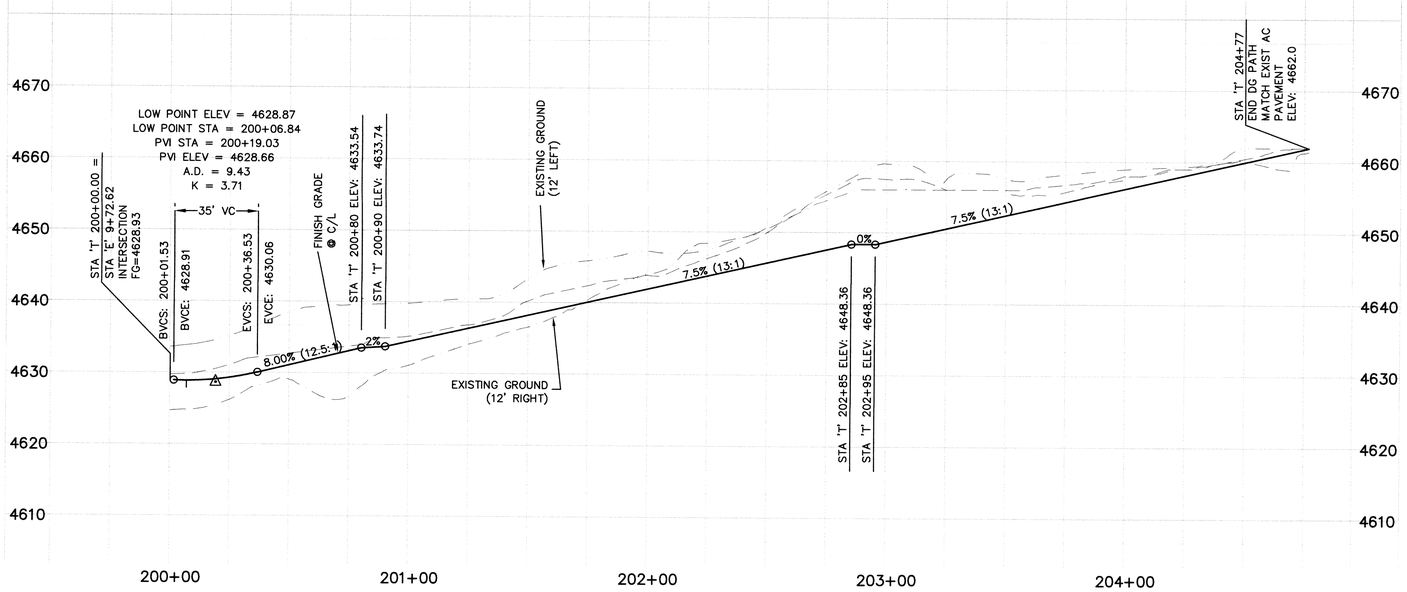

PROFILE – 'T' MULTI-USE PATH

SCALE: 1" = 30' HORIZ.
1" = 10' VERT.

DESIGNED BY: BD
DRAWN BY: BD
CHECKED BY: RF
DWG NO.: 1-0718ph2BS1
SCALE (HORIZ): AS SHOWN
SCALE (VERT): AS SHOWN
PLOT DATE: FEB 09, 2011

CARSON CITY
PUBLIC WORKS DEPARTMENT
3505 BUTTI WAY CARSON CITY, NEVADA 89701
PH: 887-2355 FAX: 887-2112

PROFESSIONAL ENGINEER STATE OF NEVADA
ROBERT D. FELLOWS
Exp: 6/30/11
CIVIL
No. 12497
4/15/11

REV.	DATE	DESCRIPTION	BY	APP'D

SAFE ROUTES TO SCHOOL
ROUTE 6 PATH IMPROVEMENTS – PHASE 2
PROJECT No. 1.0718

PLAN & PROFILE
STA 'T' 200+00 TO STA 'T' 204+77

SHEET 5 OF 8

NDOT#73596 FED#MS-0025(017)

FOR BIDDING ONLY

H:\Projects\1.0718 multi-use path imp-route6-PhASE2\dwg\1-0718-ph2bs1.dwg, T200+20, 2/9/2011 5:11:47 PM, BDoyal

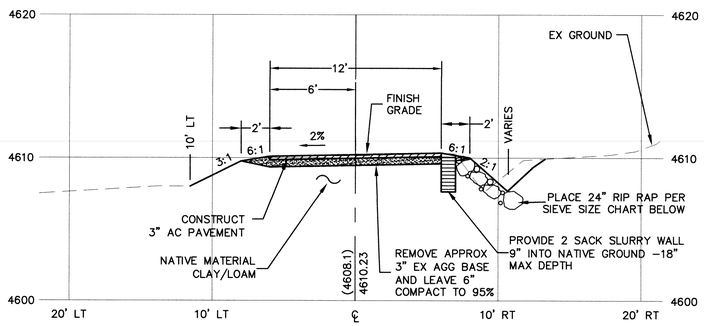

24" RIP RAP SIEVE SIZES PERCENTAGE BY WEIGHT	
24"	100%
8"	50%
4"	25%
1"	10%

PATH SECTION STA 'E' 5+00 (1/6)

SCALE HORIZ: 1"=5'
VERT: 1"=5'

NOTE:

CONTRACTOR TO PLACE AN EPA APPROVED STERILANT IN THE TOP COURSE OF AGG BASE UNDER AC PAVEMENT AND IN EQUESTRIAN AND FOOT PATHS. CONSTRUCTION METHODS SHALL APPLY STERILANTS ONLY WITHIN THE PATH BOUNDARY INSURING THAT STERILANT SHALL NOT REACH/CONTAMINATE ADJACENT WATERWAYS. CONTRACTOR SHALL OBTAIN APPROVAL OF MATERIALS AND CONSTRUCTION PRACTICES FROM CARSON CITY CONSTRUCTION MANAGER PRIOR TO PLACING STERILANT.

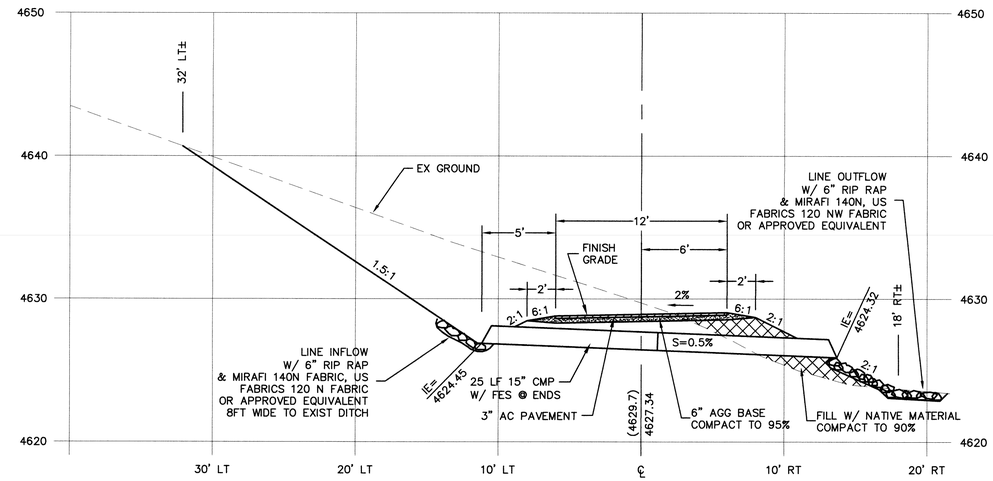

PATH SECTION STA 'T' 200+00 (3/6)

SCALE :HORIZ 1"=5'
VERT: 1"=5'

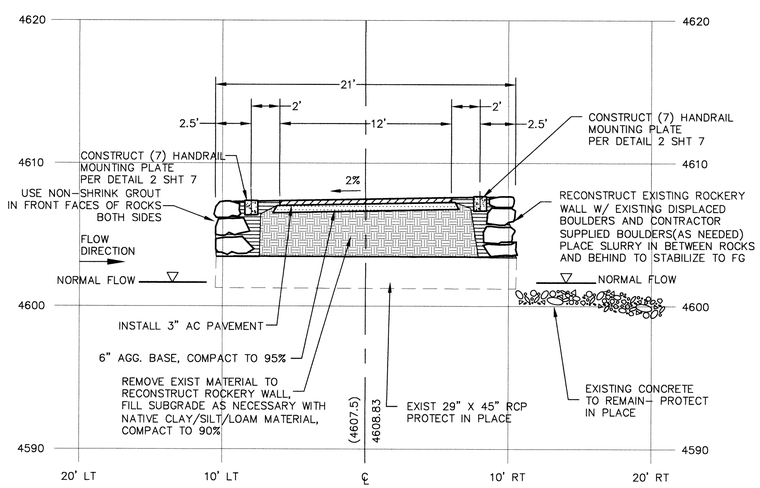

PATH SECTION STA 'E' 5+68 (2/6)

SCALE :HORIZ 1"=5'
VERT: 1"=5'

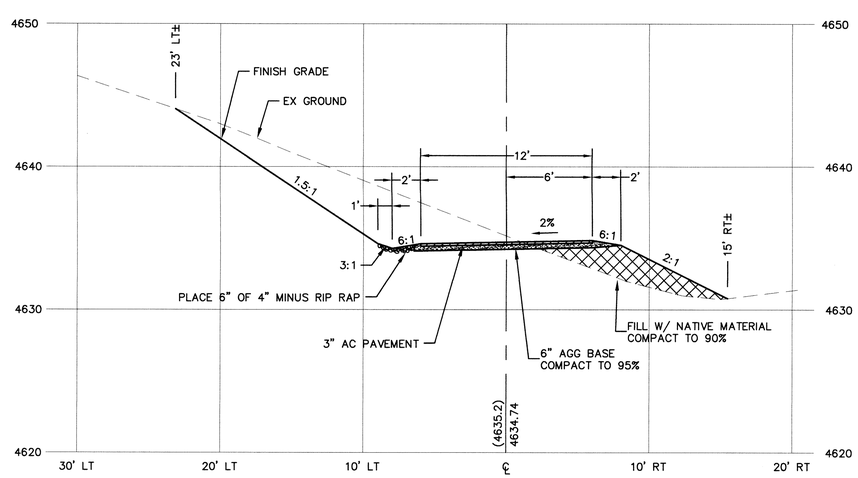

PATH SECTION STA 'T' 201+00 (4/6)

SCALE :HORIZ 1"=5'
VERT: 1"=5'

DESIGNED BY: BD
DRAWN BY: BD
CHECKED BY: RF
DWG NO.: 1-0718ph2BS1
SCALE (HORIZ): AS SHOWN
SCALE (VERT): AS SHOWN
PLOT DATE: FEB 09, 2011

CARSON CITY
PUBLIC WORKS DEPARTMENT
3505 BUTTI WAY CARSON CITY, NEVADA 89701
PH: 887-2355 FAX: 887-2112

PROFESSIONAL ENGINEER STATE OF NEVADA
ROBERT D. FELLOWS
Exp: 6/30/11
CIVIL
No. 12497
4/15/11

REV.	DATE	DESCRIPTION	BY	APP'D

SAFE ROUTES TO SCHOOL
ROUTE 6 PATH IMPROVEMENTS - PHASE 2
PROJECT No. 1.0718

SECTIONS

SHEET 6 OF 8

NDOT#73596 FED#MS-0025(017)

FOR BIDDING ONLY

H:\Projects\1.0718 multi-use path img-routef-PHASE2\dwg\1-0718-pt2bs1.dwg, SE1, 2/9/2011 3:55:38 PM, BDypol

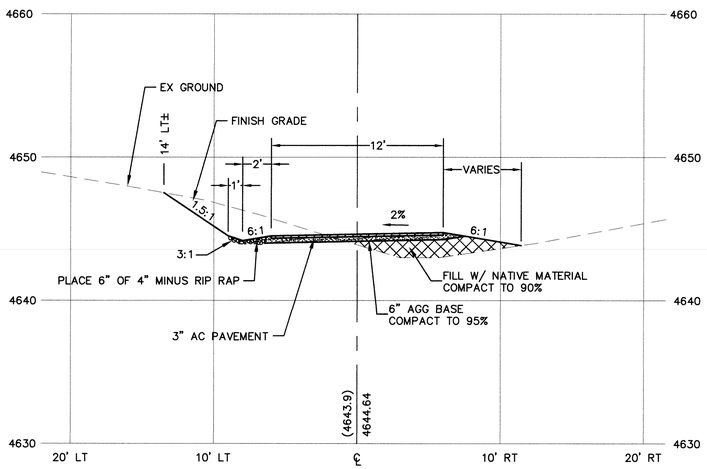

NOTE:

CONTRACTOR TO PLACE AN EPA APPROVED STERILANT IN THE TOP COURSE OF AGG BASE UNDER AC PAVEMENT AND IN EQUESTRIAN AND FOOT PATHS. CONSTRUCTION METHODS SHALL APPLY STERILANTS ONLY WITHIN THE PATH BOUNDARY INSURING THAT STERILANT SHALL NOT REACH/CONTAMINATE ADJACENT WATERWAYS. CONTRACTOR SHALL OBTAIN APPROVAL OF MATERIALS AND CONSTRUCTION PRACTICES FROM CARSON CITY CONSTRUCTION MANAGER PRIOR TO PLACING STERILANT.

PATH SECTION STA 'T' 202+00 (1/7)

SCALE :HORIZ 1"=5'
VERT: 1"=5'

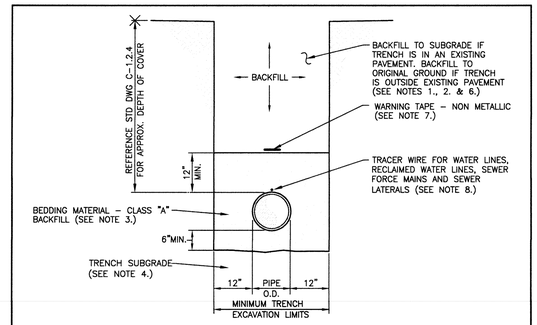

TYPICAL TRENCH SECTION

NTS

NOTES:

1. WATER DENSIFIED BACKFILL AND TUNNELING SHALL BE BY SPECIAL PROVISION ONLY.
2. BACKFILL SHALL CONFORM TO THE REQUIREMENTS OF CLASS E BACKFILL AS SPECIFIED IN SUBSECTION 200.03.06 OF THE SSPWC. MATERIAL SHALL BE PLACED IN LIFT THICKNESS SPECIFIED IN SUBSECTION 305.10 OF THE SSPWC AND DENSIFIED TO 90% RELATIVE COMPACTION.
3. BEDDING SHALL CONFORM TO THE REQUIREMENTS OF CLASS A BACKFILL AS SPECIFIED IN SUBSECTION 200.03.02 OF THE SSPWC. MATERIAL SHALL BE DENSIFIED TO 90% RELATIVE COMPACTION.
4. PLANS SHALL INCLUDE A DETAIL FOR SUBGRADE STABILIZATION INCLUDING BACKFILL MATERIAL, STRUCTURAL GEOTEXTILE FILTER FABRIC AND MODIFIED CUTOFF COLLARS WHEN POTENTIAL FOR UNSTABLE SUBGRADES EXIST, SUBJECT TO THE APPROVAL OF THE CARSON CITY ENGINEER OR PUBLIC WORKS DIRECTOR.
5. FOR TRENCHES IN ROADWAY SECTION, SEE PAVEMENT PATCH DETAIL (DWG. No. C-5.1.6).
6. FOR THE PURPOSE OF PAYMENT; EXCAVATION AND BACKFILL QUANTITIES ARE BASED ON THESE STANDARD DRAWINGS, AND NO ADDITIONAL COMPENSATION WILL BE MADE. SHORING OR SLOPED CUT SLOPES MAY BE NECESSARY, BUT THERE WILL BE NO ADDITIONAL PAYMENT. ALL EXCAVATIONS SHALL CONFORM TO THE LATEST O.S.H.A. REQUIREMENTS.
7. PLACE NON METALLIC WARNING TAPE 1 FOOT ABOVE ALL BURIED PIPES AND CONDUITS.
8. TRACER WIRE SHALL BE 12 GAUGE (MINIMUM THICKNESS) INSULATED SOLID COPPER OR COPPER-CLAD STEEL CORE WIRE. INSULATION SHALL BE 30 MIL HDPE. PLANS SHALL SPECIFY WIRE STRENGTH AND INSULATION THICKNESS FOR BORING APPLICATIONS. SPLICES SHALL BE CONNECTED BY WIRE NUTS, SEALED WITH AQUA SEAL OR SILICON FILLED, AND DOUBLE WRAPPED WITH U/L LISTED ELECTRICAL TAPE. TRACER WIRE COLOR SHALL BE, BLUE FOR WATER, PURPLE FOR RECLAIMED WATER, AND GREEN FOR SEWER.

NO.	REVISION	DATE	STANDARD DETAIL FOR PUBLIC WORKS CONSTRUCTION	SECTION
			TRENCH EXCAVATION AND BACKFILL	CARSON CITY
				DRAWING NO. C-1.2.1 (305)
APPROVED BY:		7/09		DATE 7/2009

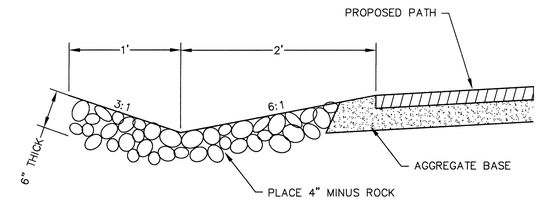

DITCH NARROWS 1 TO 1.5 FT NEXT TO BOULDERS
MAINTAIN 12 INCH DEPTH MIN

ROCK LINED V-DITCH (5/7)

NOT TO SCALE

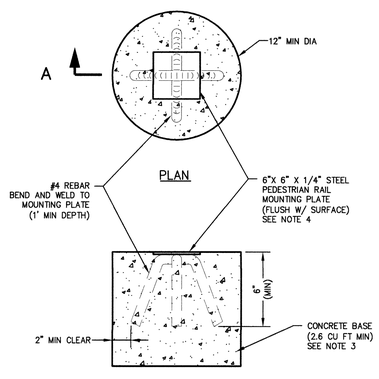

SECTION A-A

NOTES:

1. NO CONCRETE SHALL BE PLACED UNTIL FORMS AND SUBGRADE ARE INSPECTED BY CARSON CITY ENGINEERING DIVISION.
2. PORTLAND CEMENT CONCRETE (P.C.C.) SHALL HAVE THE FOLLOWING CHARACTERISTICS: FIBER REINFORCED, 4000 PSI MIN COMPRESSIVE STRENGTH @ 28 DAYS, MIN 6 SACKS OF CEMENT PER CUBIC YARDS WITH A MAX. WATER/CEMENT RATIO OF 0.45, AIR ENTRAINMENT 6% ±1.5%, SLUMP AT 1 TO 4 INCHES ALL MATERIALS SHALL CONFORM TO SSPWC SECTION 202. OF THE STANDARD SPECIFICATIONS FOR PUBLIC WORKS CONSTRUCTION.
3. ALL CONCRETE EDGING AND JOINTING SHALL BE CONSTRUCTED IN ACCORDANCE WITH STD. DETAIL 1-14.1 AND CONFORM TO SEC. 312.09 OF THE STANDARD SPECIFICATIONS FOR PUBLIC WORKS CONSTRUCTION (SSPWC).
4. ALL WELDED PEDESTRIAN RAIL MOUNT ANCHORS/PLATES TO BE INSPECTED BY CARSON CITY PUBLIC WORKS PRIOR TO PLACING IN CONCRETE.

PEDESTRIAN RAIL MOUNT (2/7)

NOT TO SCALE

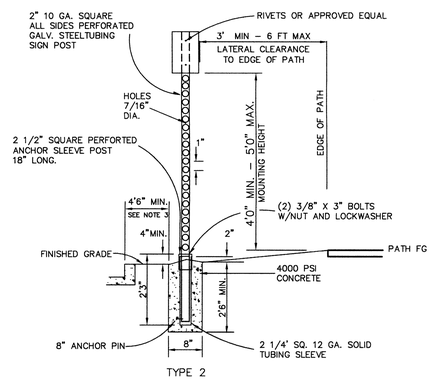

TYPE 2

NOTES:

1. SIGN MATERIALS AND CONSTRUCTION SHALL BE IN CONFORMANCE WITH THE LASTEST EDITION OF THE MANUAL ON UNIFORM TRAFFIC CONTROL DEVICES.

STREET SIGN (3/7)

NOT TO SCALE

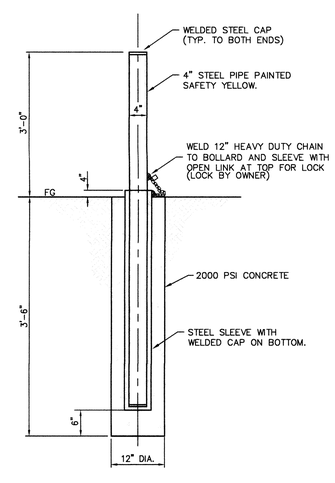

PIPE BOLLARD DETAIL (REMOVABLE) (4/7)

NOT TO SCALE

DESIGNED BY: BD
DRAWN BY: BD
CHECKED BY: RF
DWG NO.: 1-0718ph2BS1
SCALE (HORIZ): AS SHOWN
SCALE (VERT): AS SHOWN
PLOT DATE: FEB 09, 2011

CARSON CITY
PUBLIC WORKS DEPARTMENT
3505 BUTTI WAY CARSON CITY, NEVADA 89701
PH: 887-2355 FAX: 887-2112

REGISTERED PROFESSIONAL ENGINEER - STATE OF NEVADA
ROBERT D. FELLOWS
Exp: 6/30/11
CIVIL
No. 12497
2/10/11

REV.	DATE	DESCRIPTION	BY	APP'D

SAFE ROUTES TO SCHOOL
ROUTE 6 PATH IMPROVEMENTS - PHASE 2
PROJECT No. 1.0718

CONSTRUCTION DETAILS

SHEET 7 OF 8

FOR BIDDING ONLY

NDOT#73596 FED#MS-0025(017)

H:\Projects\1.0718 multi-use path imp-route6-Ph2&S2\dwg\1-0718-ph2bs1.dwg, DE^1, 2/9/2011 3:56:30 PM, BDypdf

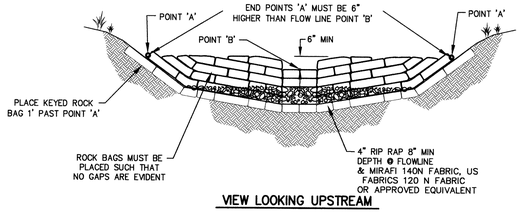

VIEW LOOKING UPSTREAM

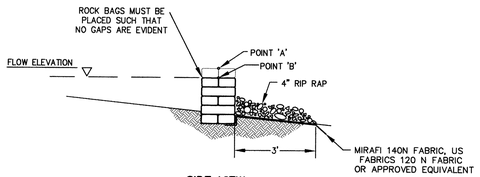

SIDE VIEW

NOTES:

1. ROCK BAG SILT BARRIER SHALL BE PLACED ON SLOPE CONTOURS TO MAXIMIZE PONDING EFFICIENCY.
2. PLACE ROCK BAG SUCH THAT OPENINGS ARE NOT FACING UPSTREAM NO GAPS ARE EVIDENT BETWEEN BAGS.
3. INSPECT AND REPAIR FENCE AFTER EACH STORM EVENT AND REMOVE SEDIMENT WHEN NECESSARY. 9" MAXIMUM RECOMMENDED SEDIMENT STORAGE HEIGHT.
4. REMOVED SEDIMENT SHALL BE DEPOSITED TO AN AREA THAT WILL NOT CONTRIBUTE TO SEDIMENT OFF-SITE AND CAN BE PERMANENTLY STABILIZED.
5. ROCK BAG CHECK DAM SHALL BE PAID FOR UNDER THE STORM WATER PROTECTION BID ITEM.

ROCK BAG CHECK DAM

NOT TO SCALE

1/8

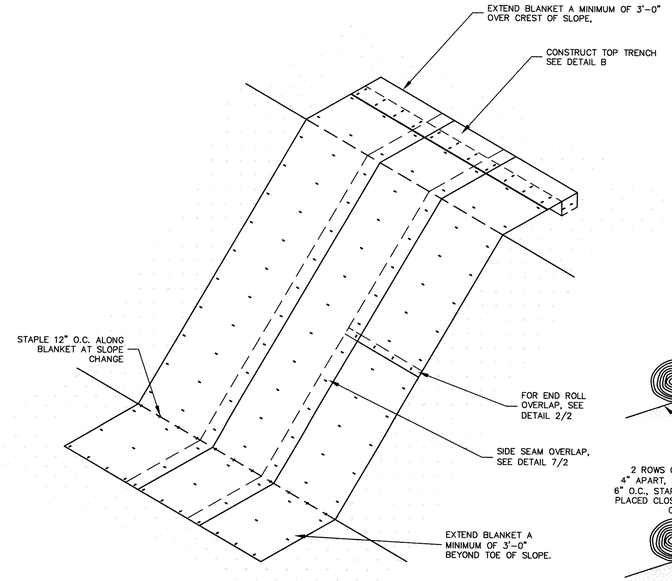

STRAW BLANKET APPLICATION DETAIL

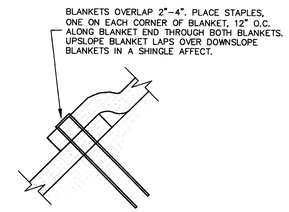

DETAIL A – BLANKET OVERLAP

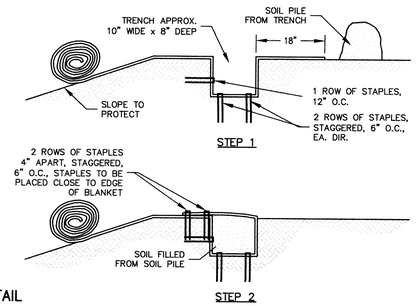

DETAIL B – TOP TRENCH DETAIL

NOTES:

1. GRADE, DISK AND PREPARE SEEDBED. PLACE TOPSOIL, AMEND SOIL, FERTILIZE AND SOW SEEDS NATIVE TO THE GREAT BASIN AS DIRECTED BY ENGINEER.
2. WHEN PLACING BLANKETS ON LONG SLOPES/SIDEHILLS UNROLL FROM TOP OF HILL IF POSSIBLE. STAPLE CENTER OF ROLL FIRST THEN WORK OUT FROM CENTER.
3. WHEN PLACING BLANKETS ON SIDE SLOPES OF DITCHES AND CHANNELS BLANKETS ARE TO BE INSTALLED HORIZONTALLY STARTING AT THE HIGH FLOW LINE AND WORKING UPSTREAM AND UPHILL. OVERLAPS SHALL BE 6 TO 8 INCHES.
4. PLACE STAPLES AT 12" SPACING AT THE TOP AND BOTTOM EDGES AND 24" SPACING AT SIDE EDGES AND MIDDLE OF BLANKET. PLACE STAPLES AT 12 INCHES BELOW HIGH FLOW LINES.
5. SLOPED SOIL STABILIZATION SHALL BE PAID FOR UNDER THE STORM WATER PROTECTION BID ITEM.

SLOPED SOIL STABILIZATION

NOT TO SCALE

3/8

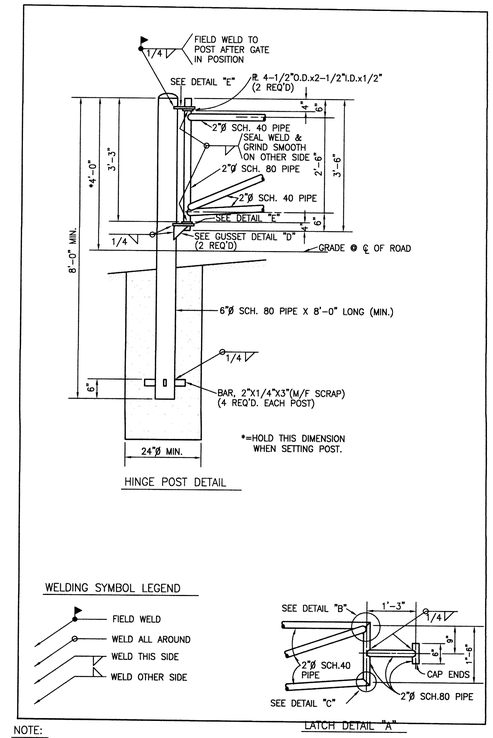

NOTE:

1. THE EXPOSED SURFACE OF THE CONCRETE SHALL BE CROWNED TO SHED WATER.

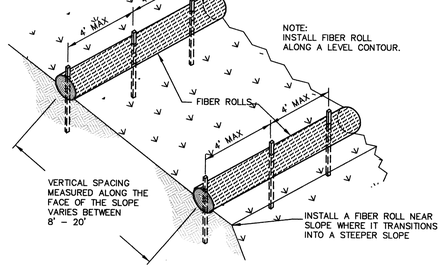

TYPICAL FIBER ROLL INSTALLATION

N.T.S.

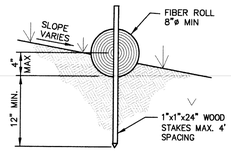

ENTRENCHMENT DETAIL

N.T.S.

NOTES:

1. INSPECT AND REPAIR WATTLES AFTER EACH STORM EVENT AND REMOVE SEDIMENT WHEN NECESSARY. 4" MAXIMUM RECOMMENDED SEDIMENT STORAGE HEIGHT.
2. REMOVED SEDIMENT SHALL BE DEPOSITED TO AN AREA THAT WILL NOT CONTRIBUTE TO SEDIMENT OFF-SITE AND CAN BE PERMANENTLY STABILIZED.
3. STRAW WATTLES SHALL BE PAID FOR UNDER THE STORM WATER PROTECTION BID ITEM.

STRAW WATTLES

NOT TO SCALE

2/8

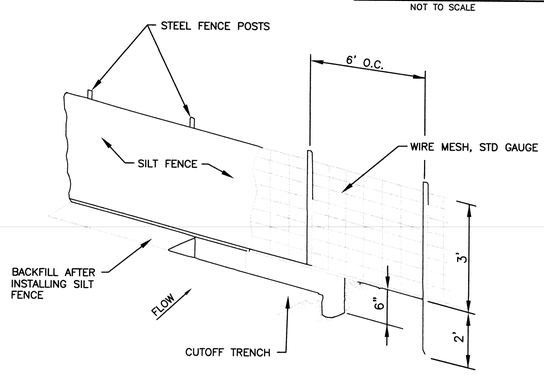

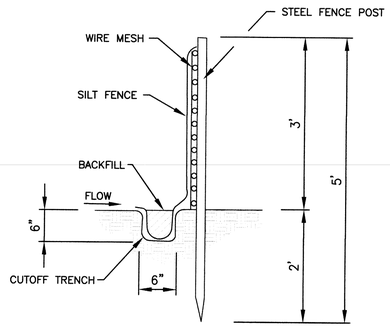

NOTES:

1. THE CONTRACTOR MAY USE MANUFACTURED SILT FENCING IN LIEU OF THE ABOVE, SUBJECT TO SUBMITTAL OF MANUFACTURER'S DATA SHEETS TO THE CONSTRUCTION MANAGER FOR APPROVAL.
2. SILT FENCE SHALL BE PAID FOR UNDER THE BMP's EROSION CONTROL BID ITEM.

SILT FENCE

NOT TO SCALE

4/8

Call before you Dig
Avoid cutting underground utility lines. It's costly.
Call 811 OR 1-800-227-2600

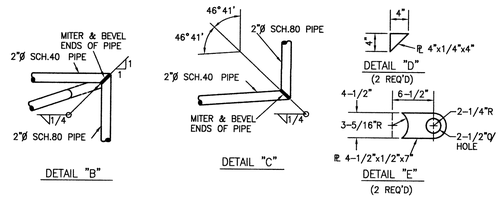

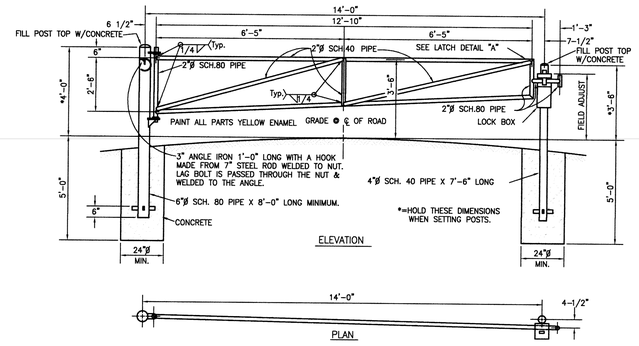

POLE GATE

NOT TO SCALE

5/8

DESIGNED BY:	BD
DRAWN BY:	BD
CHECKED BY:	RF
DWG NO.:	1-0718sh2BS1
SCALE (HORIZ):	AS SHOWN
SCALE (VERT):	AS SHOWN
PLOT DATE:	FEB 09, 2011

CARSON CITY
PUBLIC WORKS DEPARTMENT
3505 BUTTI WAY CARSON CITY, NEVADA 89701
PH: 887-2355 FAX: 887-2112

PROFESSIONAL ENGINEER – STATE OF NEVADA
ROBERT D. FELLOWS
Exp: 6/30/11
CIVIL
No. 12497

REV.	DATE	DESCRIPTION	BY	APP'D

SAFE ROUTES TO SCHOOL
ROUTE 6 PATH IMPROVEMENTS – PHASE 2
PROJECT No. 1.0718

CONSTRUCTION DETAILS

SHEET 8 OF 8

FOR BIDDING ONLY

NDOT#73596 FED#MS-0025(017)

H:\Projects\1.0718 multi-use path imp-route6-PhASE2\dwg\1-0718-ph2bs1.dwg, DET2, 2/9/2011 3:57:25 PM, BDoyal