SALIMAN ROAD AND ROBINSON STREET STRIPING

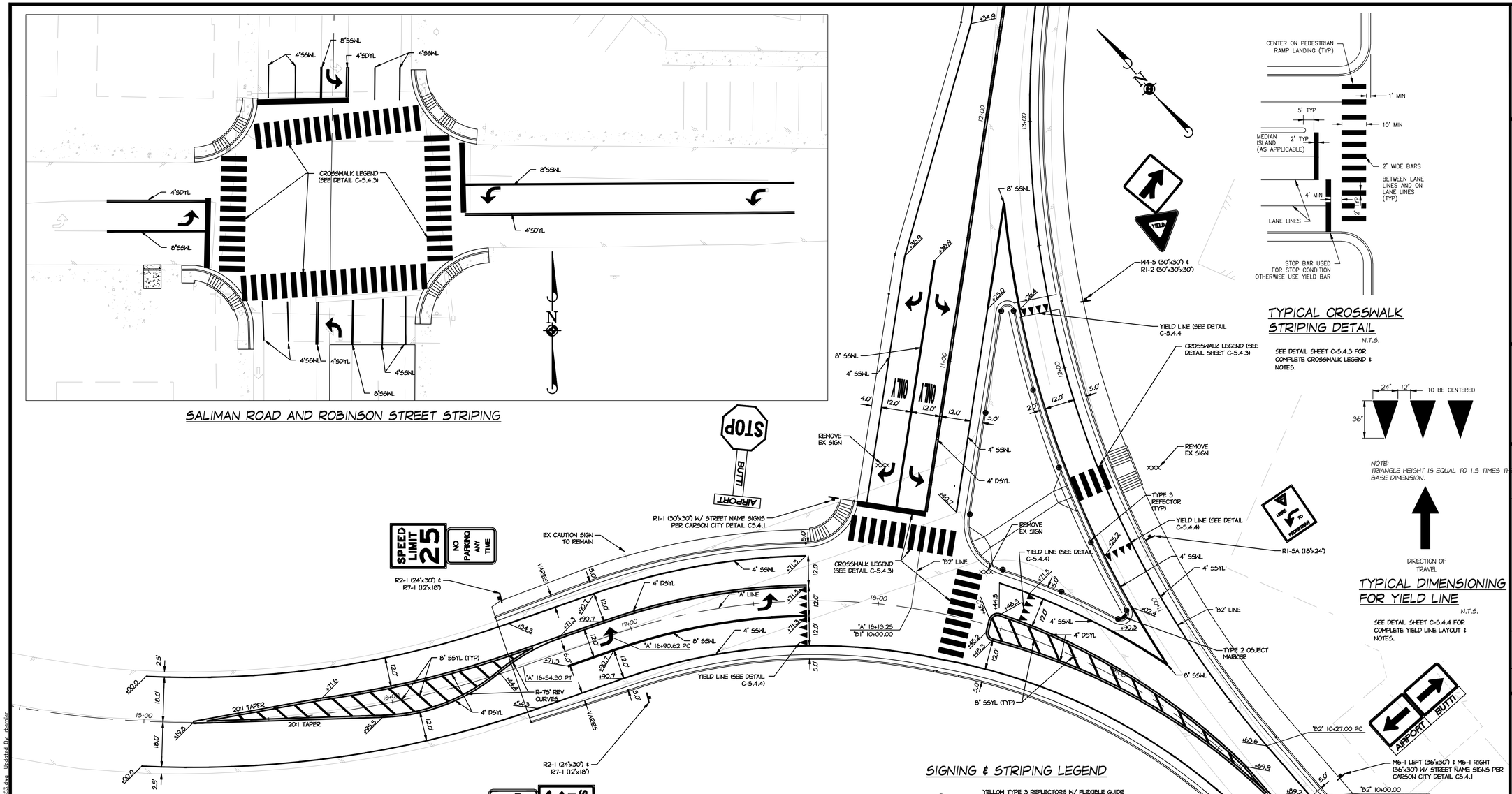

TYPICAL CROSSWALK STRIPING DETAIL

N.T.S.

SEE DETAIL SHEET C-5.4.3 FOR COMPLETE CROSSWALK LEGEND & NOTES.

NOTE:
TRIANGLE HEIGHT IS EQUAL TO 1.5 TIMES THE BASE DIMENSION.

TYPICAL DIMENSIONING FOR YIELD LINE

N.T.S.

SEE DETAIL SHEET C-5.4.4 FOR COMPLETE YIELD LINE LAYOUT & NOTES.

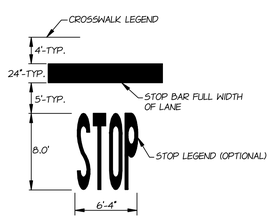

STOP BAR DETAIL

N.T.S.

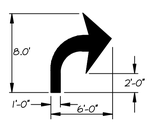

TRAFFIC FLOW ARROW DETAIL

N.T.S.

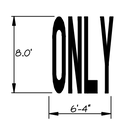

"ONLY" PAVEMENT MARKER DETAIL

N.T.S.

SIGNING & STRIPING NOTES

1. ALL STRIPING SHALL CONFORM TO THE MANUAL ON UNIFORM TRAFFIC CONTROL DEVICES (MUTCD) FOR STREETS AND HIGHWAYS, 2009 EDITION.
2. SIGN MATERIALS, CONSTRUCTION AND PLACEMENT SHALL BE IN CONFORMANCE WITH MANUAL ON UNIFORM TRAFFIC CONTROL DEVICES (MUTCD) FOR STREETS AND HIGHWAYS, 2009 EDITION.
3. ALL SIGNS SHALL BE LOCATED AT BACK OF SIDEWALK, UNLESS NOTED OTHERWISE.
4. INLAY TAPE STRIPING AND/OR PAVEMENT LEGENDS SHALL BE INSTALLED PER MANUFACTURERS RECOMMENDATIONS.
5. ALL PAINTED STRIPING AND PAVEMENT LEGENDS SHALL CONFORM TO CARSON CITY PUBLIC WORKS SPECIFICATIONS.
6. LOCATIONS OF ALL SIGNS & GUIDE POSTS ARE APPROXIMATE. FINAL LOCATIONS SHALL BE AS DETERMINED BY THE ENGINEER IN THE FIELD.
7. ALL STRIPING SHALL BE 4" WIDE UNLESS OTHERWISE NOTED ON PLAN.
8. EXISTING STRIPING SHALL BE OBLITERATED BY GRINDING AND APPLICATION OF FOG COAT.

SIGNING & STRIPING LEGEND

●	YELLOW TYPE 3 REFLECTORS W/ FLEXIBLE GUIDE POST (TUBULAR PER NDOT STD DWG R-9.1.1 W/ BOLT DOWN BASE @ MEDIAN CURBS/ISLANDS)
▮	YELLOW TYPE 2 OBJECT MARKER PER NDOT STD DWG 9.2.1 (W/ BOLT DOWN BASE)
⊣	SIGN AS CALLED OUT ON PLAN
↱	TURN ARROW
SSWL	SINGLE SOLID WHITE LINE
SBWL	SINGLE BROKEN WHITE LINE
SDWL	SINGLE DOTTED WHITE LINE
SSYL	SINGLE SOLID YELLOW LINE
DSYL	DOUBLE SOLID YELLOW LINE
	REMOVE EX SIGN

GRAPHIC SCALE
20 0 10 20
(IN FEET)
1 INCH = 20 FEET

PROJ. MGR.: KLD/RCB
PROJ ASSOC.: CJT
CHECKED BY: RCB
DWG NO.: CCCCN15
SCALE (HORIZ): 1"=20'
SCALE (VERT): ----
PLOT DATE: JUNE 2011

CARSON CITY
PUBLIC WORKS DEPARTMENT
3505 BUTTI WAY CARSON CITY, NEVADA 89701
PH: 887-2355 FAX: 887-2112

Manhard CONSULTING LTD
3478 Executive Pointe Way, Suite 12 Carson City, NV 89706
PH: (775) 882-5620 FX: (775)883-7282

PROFESSIONAL ENGINEER - STATE OF NEVADA
REBECCA C. BERNIER
Exp12/31/12
CIVIL
No. 19279

REV.	DATE	DESCRIPTION	BY	APP.

EAST-WEST WATER TRANSMISSION MAIN PH 1
PROJECT No: 2011-301
SIGNING & STRIPING PLAN

SHEET 23 OF 35

BID #1011-243

FOR BIDDING PURPOSES ONLY

June 16, 2011 - 10:26 Dwg Name: P:\Cccccn15\dwg\Eng\Final Drawings\PLAN SET\SST-SS3.dwg Updated By: rbernier

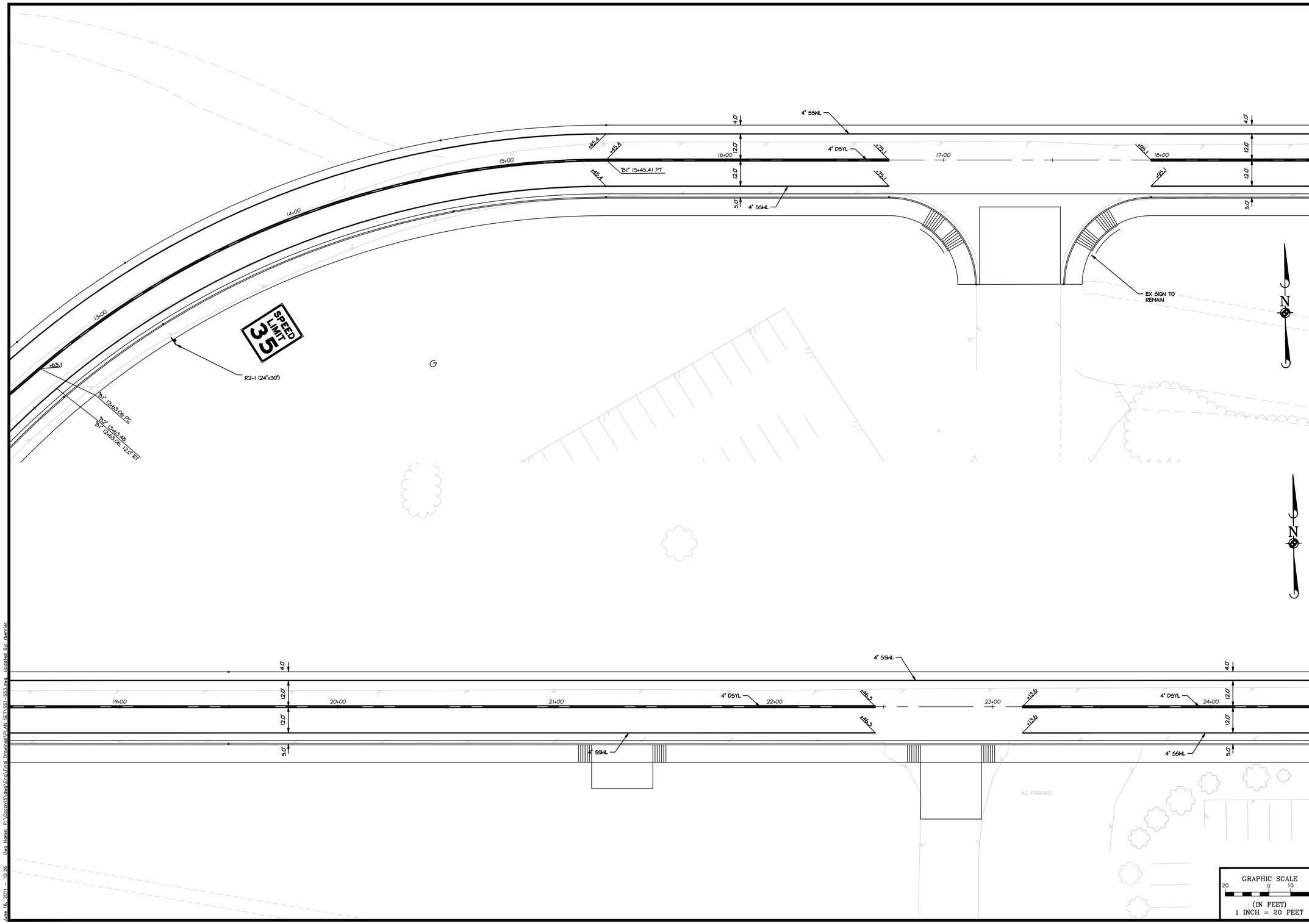

PROJ. MGR.: KLD/RCB
PROJ ASSOC.: CJT
CHECKED BY: RCB
DWG NO.: CCCCN15
SCALE (HORIZ): 1"=20'
SCALE (VERT): ----
PLOT DATE: JUNE 2011

CARSON CITY
PUBLIC WORKS DEPARTMENT
3505 BUTTI WAY CARSON CITY, NEVADA 89701
PH: 887-2355 FAX: 887-2112

Manhard CONSULTING LTD
3476 Executive Pointe Way, Suite 12 Carson City, NV 89706
PH: (775) 882-5630 FH: (775)883-7282

PROFESSIONAL ENGINEER - STATE OF NEVADA
REBECCA C. BERNIER
Exp12/31/12
CIVIL
No. 19279

REV.	DATE	DESCRIPTION	BY	APP.

EAST-WEST WATER TRANSMISSION MAIN PH 1
PROJECT No: 2011-301
SIGNING & STRIPING PLAN

SHEET 24 OF 35

BID #1011-243

FOR BIDDING PURPOSES ONLY

June 16, 2011 - 10:26 Dwg Name: P:\Ccccn15\Dwg\Eng\Final Drawings\PLAN SET\SS1-SS3.dwg Updated By: rbernier

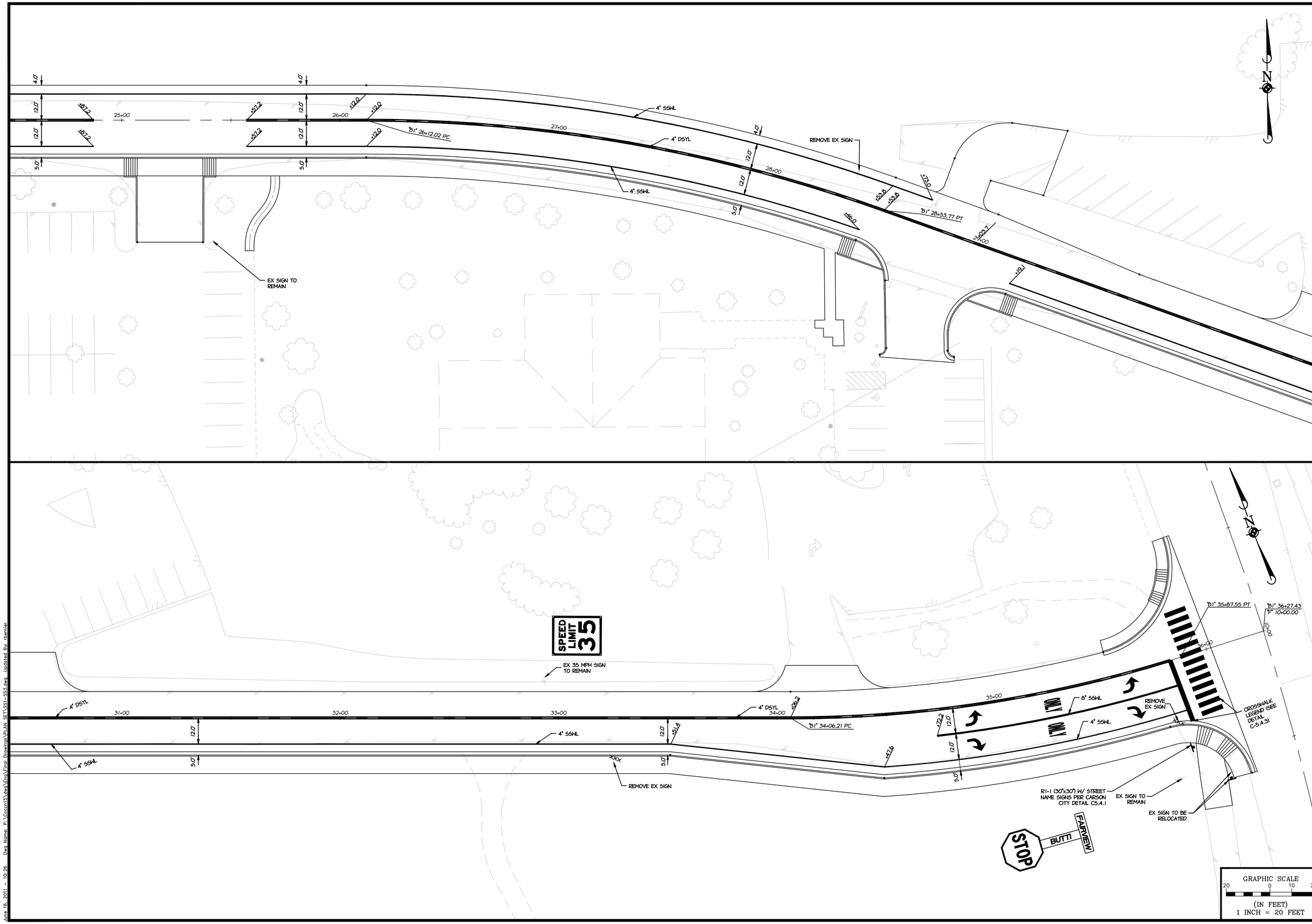

PROJ. MGR.: KLD/RCB
PROJ ASSOC.: CJT
CHECKED BY: RCB
DWG NO.: CCCCN15
SCALE (HORIZ): 1"=20'
SCALE (VERT): ----
PLOT DATE: JUNE 2011

CARSON CITY
PUBLIC WORKS DEPARTMENT
3505 BUTTI WAY CARSON CITY, NEVADA 89701
PH: 887-2355 FAX: 887-2112

Manhard CONSULTING LTD
3476 Executive Pointe Way, Suite 12 Carson City, NV 89706
PH: (775) 882-5620 FH: (775)883-7282

PROFESSIONAL ENGINEER - STATE OF NEVADA
REBECCA C. BERNIER
Exp:12/31/12
CIVIL
No. 19279

REV.	DATE	DESCRIPTION	BY	APP.

EAST-WEST WATER TRANSMISSION MAIN PH 1
PROJECT No: 2011-301
SIGNING & STRIPING PLAN

SHEET 25 OF 35

BID #1011-243

FOR BIDDING PURPOSES ONLY

June 16, 2011 - 10:26 Dwg Name: P:\Ccconf\Dwg\Eng\Final Drawings\PLAN SET\SS1-SS3.dwg Updated By: rbernier

1. ALL WORK SHALL CONFORM TO THE "STANDARD SPECIFICATIONS FOR PUBLIC WORKS CONSTRUCTION" (SSPWC) AND THE "STANDARD DETAILS FOR PUBLIC WORKS CONSTRUCTION" (SDPWC) AS ADOPTED BY CARSON CITY. THE CONTRACTOR SHALL OBTAIN A PERMIT FOR PUBLIC WORKS CONSTRUCTION FROM THE CARSON CITY PERMIT CENTER PRIOR TO THE START OF CONSTRUCTION.
2. ALL TRAFFIC CONTROL AND BARRICADING WITHIN THE CARSON CITY RIGHT-OF-WAY SHALL CONFORM TO SECTION 100.33, 332.04 AND 332.05 OF THE STANDARD SPECIFICATIONS, PART VI OF THE MANUAL ON UNIFORM TRAFFIC CONTROL DEVICES, LATEST EDITION, AND THE UNR T2 CENTER, TEMPORARY TRAFFIC CONTROL GUIDELINES LATEST EDITION. A TRAFFIC CONTROL PLAN MUST BE SUBMITTED AND APPROVED BY THE CARSON CITY ENGINEERING DIVISION PRIOR TO ANY STREET CLOSURES.
3. THE CONTRACTOR SHALL CALL UNDERGROUND SERVICE ALERT "CALL BEFORE YOU DIG" (811) OR (1-800-227-2600) AT LEAST TWO (2) WORKING DAYS PRIOR TO START OF CONSTRUCTION AND COMPLY WITH THE REQUIREMENTS OF NRS AND NAC 455 THROUGHOUT THE COURSE OF THE WORK. SEWER SERVICE LATERALS ARE NOT OWNED OR MARKED BY CARSON CITY.
4. THE CONTRACTOR SHALL CALL THE CARSON CITY ENGINEERING DIVISION (887-2300) TWO (2) WORKING DAYS PRIOR TO THE START OF CONSTRUCTION. THE CONTRACTOR SHALL CALL ONE (1) WORKING DAY PRIOR TO REQUIRED INSPECTIONS AND TESTING. THE REQUIRED INSPECTIONS AND TESTING ARE LISTED ON THE INSPECTION RECORD ISSUED WITH EACH PERMIT. THE CONTRACTOR MUST HAVE THE PERMIT NUMBER AND THE DESCRIPTION LISTED ON THE INSPECTION RECORD TO SCHEDULE REQUIRED INSPECTIONS AND TESTING. FOR CITY CONTRACTED PROJECTS, THE CONTRACTOR SHALL SCHEDULE INSPECTIONS PER THE CONTRACT DOCUMENTS.
5. FINAL INSPECTIONS WILL BE PERFORMED BY CARSON CITY ENGINEERING DIVISION ACCORDING TO THE CARSON CITY INSPECTIONS AND TESTING PROCEDURES. NOTE: THESE PROCEDURES REQUIRE SUBMITTAL OF RECORD DRAWING PRINTS BY THE CONTRACTOR AND 10 WORKING DAYS TO PREPARE A FINAL PUNCH LIST. ALL CONDITIONS OF THE FINAL INSPECTION MUST BE COMPLETED PRIOR TO FINAL ACCEPTANCE OR ANY APPROVAL OF A CERTIFICATE OF OCCUPANCY BY THE CARSON CITY ENGINEERING DIVISION.
6. MODIFICATIONS TO THE APPROVED PLANS REQUIRES REVIEW AND APPROVAL BY THE CARSON CITY ENGINEERING DIVISION. WORK PERFORMED WITHOUT WRITTEN APPROVAL BY CARSON CITY ENGINEERING WILL REQUIRE REMOVAL AT THE CONTRACTORS EXPENSE.
7. THE APPROVED PLAN, PERMIT AND INSPECTION RECORD MUST BE ON THE JOB SITE AT ALL TIMES.
8. PLAN APPROVAL FOR SEWER AND WATER CONSTRUCTION SHALL EXPIRE ONE YEAR FROM DATE OF APPROVAL UNLESS CONSTRUCTION HAS BEEN INITIATED. (CCMC 12.06.180F, 12.01.140D)
9. THE CONTRACTOR WILL BE SOLELY AND COMPLETELY RESPONSIBLE FOR ACQUIRING A STORMWATER DISCHARGE PERMIT FROM THE NEVADA DIVISION OF ENVIRONMENTAL PROTECTION (NDEP) INCLUDING DEVELOPING, SUBMITTING AND IMPLEMENTING A STORM WATER POLLUTION PREVENTION PLAN (SWPPP). THE CONTRACTOR SHALL DEVELOP, PLACE AND MAINTAIN STORM WATER PROTECTION DEVICES IN COMPLIANCE WITH THE NEVADA CONTRACTORS FIELD GUIDE FOR CONSTRUCTION SITE BEST MANAGEMENT PRACTICES (JUNE 2008).

NO.	REVISION	DATE	STANDARD DETAIL FOR PUBLIC WORKS CONSTRUCTION	SECTION CARSON CITY
			GENERAL NOTES	DRAWING NO. C-1.1.1
APPROVED BY:		7/09		DATE 7/2009

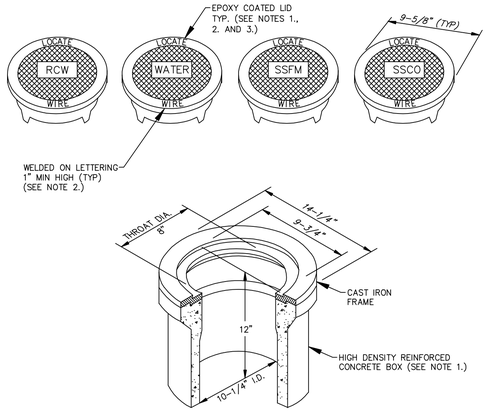

NOTES:

1. BOX AND LID SHALL BE TRAFFIC RATED WITH A MINIMUM INSIDE DIAMETER OF 10 INCHES (CHRISTY G3 TRAFFIC VALVE BOX & LID).
2. CAST IRON LID SHALL BE MARKED AT THE FACTORY "LOCATE WIRE", AND "WATER" FOR WATER APPLICATIONS, "RCW" FOR RECLAIMED WATER APPLICATIONS, "SSFM" FOR SANITARY SEWER FORCE MAIN APPLICATIONS, AND "SSCO" FOR SANITARY SEWER CLEANOUT APPLICATIONS.
3. CAST IRON LID SHALL BE EPOXY COATED AT THE FACTORY, OR POWDER COATED, COLOR SHALL BE BLUE FOR WATER APPLICATIONS, PURPLE FOR RECLAIMED WATER APPLICATIONS AND GREEN FOR SANITARY SEWER APPLICATIONS.
4. BOX SHALL BE SET OR ADJUSTED TO GRADE PER DRAWING NO. C-3.1.4, RISER FOR ADJUSTED BOX SHALL BE PER DRAWING NO. C-3.1.4 FOR OVERLAY ADJUSTMENTS, RISER WILL NOT REQUIRE REPLACEMENT OR EXTENSION IF IT EXTENDS A MINIMUM OF 2 INCHES INTO ADJUSTED BOX.

NO.	REVISION	DATE	STANDARD DETAIL FOR PUBLIC WORKS CONSTRUCTION	SECTION CARSON CITY
			LINE LOCATION BOX & LID	DRAWING NO. C-1.2.2 (306,307)
APPROVED BY:		7/09		DATE 7/2009

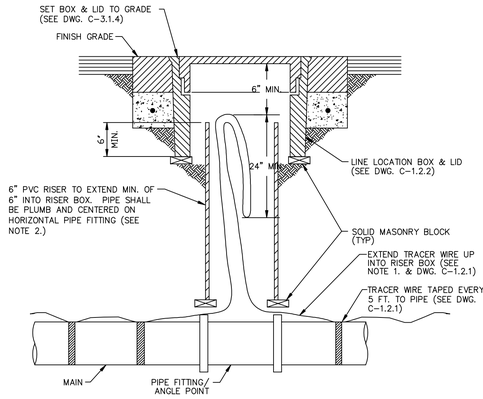

TYPICAL SECTION
NTS

NOTES:

1. WIRE SHALL BE CONTINUOUS IN RISER AND SHALL NOT BE SPLICED WITHIN 10 FEET OF RISER.
2. RISER COLOR SHALL BE BLUE, OR SAME COLOR AS MAIN FOR WATER APPLICATIONS, PURPLE FOR RECLAIMED WATER APPLICATIONS, AND GREEN FOR SANITARY SEWER APPLICATIONS.

NO.	REVISION	DATE	STANDARD DETAIL FOR PUBLIC WORKS CONSTRUCTION	SECTION CARSON CITY
			LINE LOCATION RISER	DRAWING NO. C-1.2.3 (203,306)
APPROVED BY:		07/09		DATE 7/2009

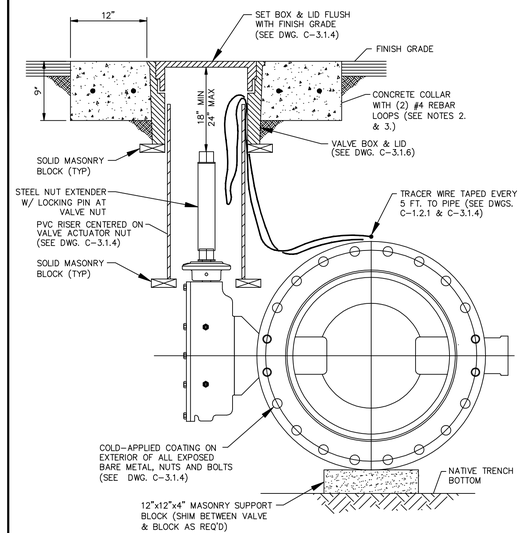

BUTTERFLY VALVE TYPICAL SECTION
NTS

REFERENCE STD DWG C-3.1.4 FOR ADDITIONAL NOTES & DETAIL.

NOTES:

1. CONCRETE COLLAR AROUND VALVE BOX SHALL EXTEND TO FINISH GRADE.
2. STAMP CONCRETE COLLAR WITH CARSON CITY SUPPLIED STAMP " 24" MAIN " AS SHOWN ON VALVE BOX COLLAR PLAN.
3. CONCRETE SHALL CONFORM TO THE SSPWC SECTION 337.10

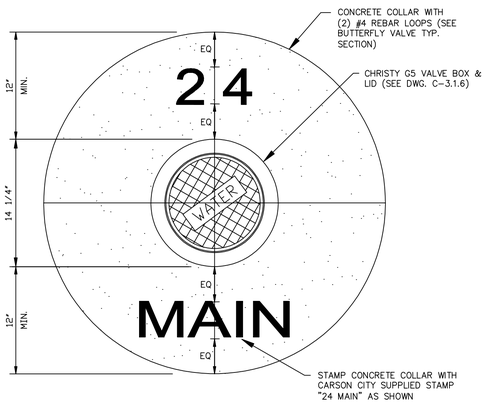

BUTTERFLY VALVE COLLAR PLAN
NTS

REFERENCE STD DWG C-3.1.4 FOR ADDITIONAL NOTES & DETAIL.

NOTES:

1. CONCRETE SHALL CONFORM TO THE SSPWC SECTION 337.10

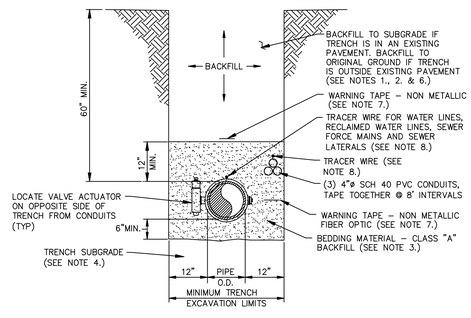

TYPICAL TRENCH SECTION
NTS

NOTES:

1. WATER DENSIFIED BACKFILL AND TUNNELING SHALL BE BY SPECIAL PROVISION ONLY.
2. BACKFILL SHALL CONFORM TO THE REQUIREMENTS OF CLASS E BACKFILL AS SPECIFIED IN SUBSECTION 200.03.06 OF THE SSPWC. MATERIAL SHALL BE PLACED IN LIFT THICKNESS SPECIFIED IN SUBSECTION 305.10 OF THE SSPWC AND DENSIFIED TO 90% RELATIVE COMPACTION.
3. BEDDING SHALL CONFORM TO THE REQUIREMENTS OF CLASS A BACKFILL AS SPECIFIED IN SUBSECTION 200.03.02 OF THE SSPWC. MATERIAL SHALL BE DENSIFIED TO 90% RELATIVE COMPACTION.
4. PLANS SHALL INCLUDE A DETAIL FOR SUBGRADE STABILIZATION INCLUDING BACKFILL MATERIAL, STRUCTURAL GEOTEXTILE FILTER FABRIC AND MODIFIED CUTOFF COLLARS WHEN POTENTIAL FOR UNSTABLE SUBGRADES EXIST, SUBJECT TO THE APPROVAL OF THE CARSON CITY ENGINEER OR PUBLIC WORKS DIRECTOR.
5. FOR TRENCHES IN ROADWAY SECTION, SEE PAVEMENT PATCH DETAIL (DWG. No. C-5.1.5).
6. FOR THE PURPOSE OF PAYMENT; EXCAVATION AND BACKFILL QUANTITIES ARE BASED ON THESE STANDARD DRAWINGS, AND NO ADDITIONAL COMPENSATION WILL BE MADE. SHORING OR SLOPED CUT SLOPES MAY BE NECESSARY, BUT THERE WILL BE NO ADDITIONAL PAYMENT. ALL EXCAVATIONS SHALL CONFORM TO THE LATEST O.S.H.A. REQUIREMENTS.
7. PLACE NON METALLIC WARNING TAPE 1 FOOT ABOVE ALL BURIED PIPES AND CONDUITS.
8. TRACER WIRE SHALL BE 12 GAUGE (MINIMUM THICKNESS) INSULATED SOLID COPPER OR COPPER-CLAD STEEL CORE WIRE. INSULATION SHALL BE 30 MIL HDPE. PLANS SHALL SPECIFY WIRE STRENGTH AND INSULATION THICKNESS FOR BORING APPLICATIONS. SPLICES SHALL BE CONNECTED BY WIRE NUTS, SEALED WITH AQUA SEAL OR SILICON FILLED, AND DOUBLE WRAPPED WITH U/L LISTED ELECTRICAL TAPE. TRACER WIRE COLOR SHALL BE, BLUE FOR WATER, PURPLE FOR RECLAIMED WATER, GREEN FOR SEWER, AND YELLOW FOR ELECTRICAL/FIBER OPTIC.

TRENCH EXCAVATION AND BACKFILL

24" ø PVC PIPE – JOINT RESTRAINT LENGTH CHART (FT)

	HORIZONTAL BENDS				VERTICAL BENDS							REDUCERS (RESTRAINT LENTH IS ON LARGER PIPE ø SIDE)		
					UPPER BEND			LOWER BEND						
TEE (BR/RUN)	90°	45°	22.5°	11.25°	45°	22.5°	11.25°	45°	22.5°	11.25°	DEAD END/ VALVE	12" REDUCER	10" REDUCER	8" REDUCER
111/20	75	31	15	8	109	53	26	17	9	4	262	194	214	230

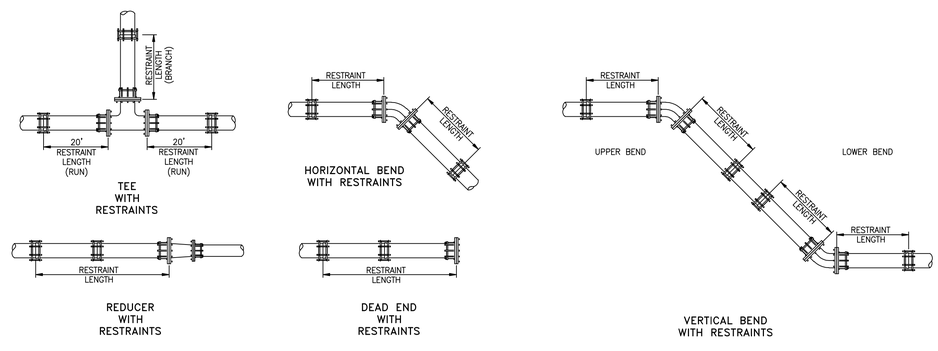

RESTRAINT LENGTH CALCULATION ASSUMPTIONS:

- SOIL TYPE = "ML"
- SOIL COVER = 5'
- RUN LENGTH = 20'
- FACTOR OF SAFETY = 1.5
- TRENCH = 90% COMPACTION (#5)
- TEST PRESSURE = 250 PSI

NOTES:

1. DEAD END AND VALVE HAVE THE SAME RESTRAINT LENGTH
2. RESTRAINING GLANDS SHALL BE FACTORY COATED DUCTILE IRON (ASTM A536-80), WITH 304 STAINLESS STEEL BOLTS, NUTS & WASHERS.
3. RESTRAINT LENGTH CORRESPONDS TO LENGTH OF RESTRAINED JOINTS REQUIRED ON EACH SIDE OF BEND, VALVE, OR FITTING.

PVC RESTRAINT LENGTH CALCULATION DETAIL

PROJ. MGR.: KLD/RCB
PROJ ASSOC.: CJT
CHECKED BY: RCB
DWG NO.: CCCCN15
SCALE (HORIZ): ----
SCALE (VERT): ----
PLOT DATE: JUNE 2011

CARSON CITY PUBLIC WORKS DEPARTMENT
3505 BUTTI WAY CARSON CITY, NEVADA 89701
PH: 887-2355 FAX: 887-2312

Manhard CONSULTING LTD
3476 Executive Pointe Way, Suite 12 Carson City, NV 89706
PH: (775) 882-5620 FH: (775)883-7282

PROFESSIONAL ENGINEER - STATE OF NEVADA
REBECCA C. BERNIER
Exp12/31/12
CIVIL
No. 19279

REV.	DATE	DESCRIPTION	BY	APP.

BID #1011-243

EAST-WEST WATER TRANSMISSION MAIN PH 1
PROJECT No: 2011-301
DETAIL SHEET

SHEET 26 OF 35

FOR BIDDING PURPOSES ONLY

June 16, 2011 - 12:50 Dwg Name: P:\Ccconf\dwg\Eng\Final Drawings\PLAN SET\DETAILS.dwg Updated By: cthomas

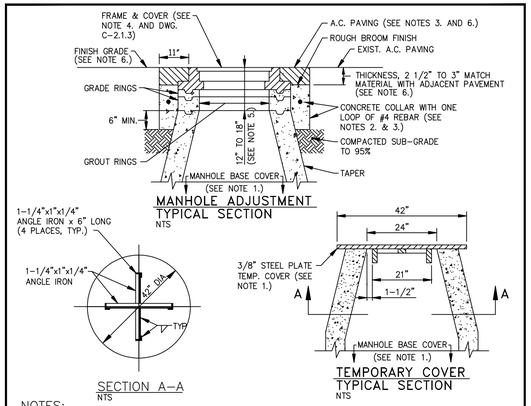

NOTES:

1. INSTALL TEMPORARY COVER WITH CONE INSTALLATION WHEN INSTALLING NEW MANHOLE OR PRIOR TO REMOVING EXISTING FRAME & COVER AND GRADE RINGS TO ADJUST TO FINISH GRADE. INSTALL COVER OVER MANHOLE BASE TO PREVENT DEBRIS FROM ENTERING SEWER SYSTEM. THE MANHOLE BASE COVER SHALL BE IN PLACE PRIOR TO PERFORMING ANY ADJUSTMENTS OR GROUTING AND SHALL REMAIN IN PLACE WHILE ADJUSTMENTS OR GROUTING ARE BEING PERFORMED. REMOVE BASE COVER UPON ADJUSTMENT APPROVAL BY CARSON CITY.
2. CONCRETE SHALL CONFORM TO THE SSPWC SECTION 202.01.12. REBAR SHALL BE USED ONLY WHEN THE MANHOLE IS LOCATED OUTSIDE PAVED AREAS.
3. THE CONCRETE COLLAR SHALL BE LEFT 2 1/2 INCHES TO 3 INCHES BELOW FINISHED ASPHALT SURFACE. APPLY AN APPROVED TACK COAT (CONFORMING TO THE SSPWC SECTION 316) AND FILL VOID BETWEEN ADJACENT PAVEMENT AND FRAME WITH TYPE 3 AC 20 PAVING (CONFORMING TO THE SSPWC SECTION 320). APPLY FOG SEAL (CONFORMING TO SSPWC SECTION 317) TO THE ASPHALT SURFACE. ALL CUTS IN PAVING SHALL BE STRAIGHT AND EVEN. EXCEPTION: WHEN STRUCTURE NOT LOCATED IN ASPHALT PAVEMENT OR LOCATED IN AN UNPAVED AREA, EXTEND CONCRETE TO FINISH GRADE.
4. INSTALL NEW FRAME & COVER UNLESS OTHERWISE SHOWN ON THE PLANS OR SPECIAL CONDITIONS. FRAME & COVER SHALL BE SET FLUSH WITH FINISH GRADE UNLESS OTHERWISE NOTED.
5. FOR NEW MANHOLE INSTALLATIONS, DISTANCE FROM COVER TO CONE SHALL BE 12 INCHES MINIMUM AND 15 INCHES MAXIMUM FOR MINOR RESIDENTIAL STREETS AND 15 INCHES MINIMUM AND 18 INCHES MAXIMUM FOR ALL OTHER STREETS. FOR ADJUSTING EXISTING FRAME & COVERS THE DISTANCE FROM COVER TO CONE SHALL NOT EXCEED 18 INCHES.
6. WHEN LOCATED IN NDOT RIGHT-OF-WAY, CONCRETE COLLAR SHALL CONFORM TO NDOT STANDARD PLAN SHT R-4.7.3 AND STANDARD SPECIFICATION 609.

NO.	REVISION	DATE	STANDARD DETAIL FOR PUBLIC WORKS CONSTRUCTION	SECTION CARSON CITY
			MANHOLE FRAME & COVER ADJUSTMENT	DRAWING NO. C-2.1.5 (204, 323)
APPROVED BY:		7/09		DATE 7/2009

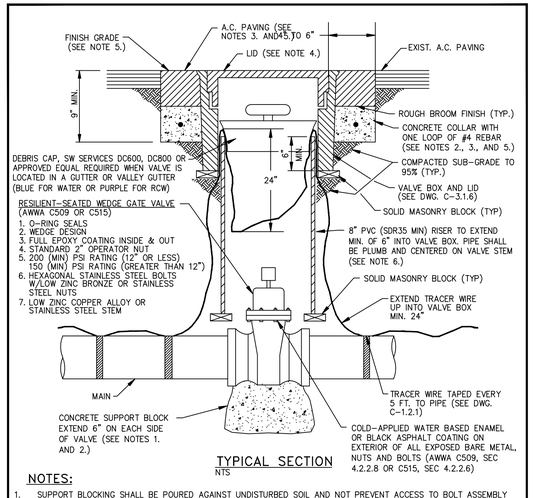

NOTES:

1. SUPPORT BLOCKING SHALL BE POURED AGAINST UNDISTURBED SOIL AND NOT PREVENT ACCESS TO BOLT ASSEMBLY OR VALVE JOINTS.
2. CONCRETE SHALL CONFORM TO THE SSPWC SECTION 337.10. REBAR SHALL ONLY BE USED WHEN THE VALVE BOX IS LOCATED OUTSIDE PAVED AREAS.
3. THE CONCRETE COLLAR SHALL BE LEFT 2 1/2 INCHES – 3 INCHES BELOW FINISHED ASPHALT SURFACE. APPLY AN APPROVED TACK COAT (CONFORMING TO THE SSPWC SECTION 316) AND FILL VOID BETWEEN ADJACENT PAVEMENT AND FRAME WITH TYPE 3 PG 64-22 PAVING (CONFORMING TO THE SSPWC SECTION 320). APPLY FOG SEAL (CONFORMING TO THE SSPWC SECTION 317) TO THE ASPHALT SURFACE. ALL CUTS IN PAVING SHALL BE STRAIGHT AND EVEN. EXCEPTION: WHEN STRUCTURE NOT LOCATED IN ASPHALT PAVEMENT OR IN AN UNPAVED AREA, EXTEND CONCRETE TO FINISH GRADE.
4. LIDS SHALL BE SET FLUSH WITH FINISH GRADE UNLESS OTHERWISE NOTED.
5. WHEN LOCATED IN NDOT RIGHT-OF-WAY, CONCRETE COLLAR SHALL CONFORM TO NDOT STANDARD PLAN SHT R-4.3.3 AND STANDARD SPECIFICATION 609.
6. RISER COLOR SHALL BE BLUE, OR SAME COLOR AS MAIN FOR WATER APPLICATIONS, PURPLE FOR RECLAIMED WATER APPLICATIONS, AND GREEN FOR SANITARY SEWER APPLICATIONS.
7. VALVES ON FIRE LINES SHALL BE UL/FM APPROVED AND MEET ALL APPLICABLE NFPA REQUIREMENTS.

NO.	REVISION	DATE	STANDARD DETAIL FOR PUBLIC WORKS CONSTRUCTION	SECTION CARSON CITY
			GATE VALVE	DRAWING NO. C-3.1.4 (203,307)
APPROVED BY:		07/09		DATE 7/2009

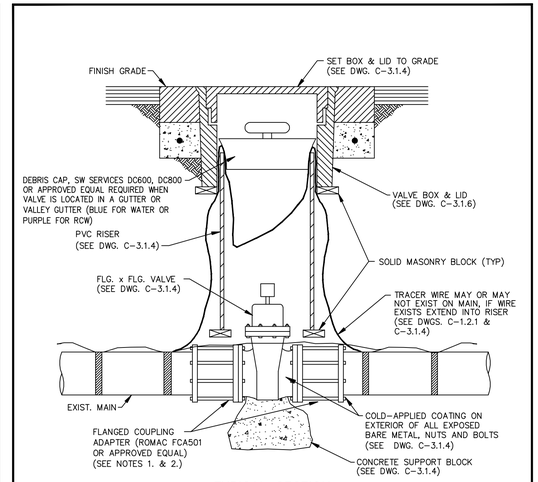

NOTES:

1. VALVE SHALL BE CUT IN A MINIMUM OF 40 FEET FROM NEW CONNECTION POINT UNLESS OTHERWISE APPROVED BY CARSON CITY WATER UTILITY.
2. CUT OPENING IN PIPE 1/2 INCH LONGER THAN TOTAL LENGTH OF VALVE, INSERT FLG x FLG VALVE USING FLANGED COUPLING ADAPTERS.

NO.	REVISION	DATE	STANDARD DETAIL FOR PUBLIC WORKS CONSTRUCTION	SECTION CARSON CITY
			CUT IN GATE VALVE	DRAWING NO. C-3.1.5 (203,307)
APPROVED BY:		07/09		DATE 7/2009

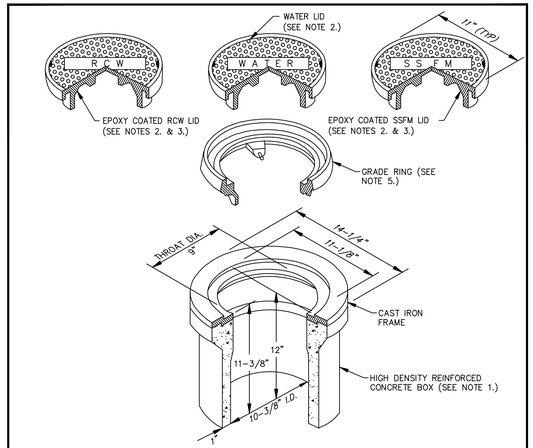

NOTES:

1. VALVE BOX AND LID SHALL BE H20 TRAFFIC RATED WITH A MINIMUM INSIDE DIAMETER OF 10 INCHES (CHRISTY G5 TRAFFIC VALVE BOX & LID).
2. CAST IRON LID SHALL BE MARKED AT THE FACTORY "WATER" FOR WATER APPLICATIONS, "RECLAIMED WATER" OR "RCW" FOR RECLAIMED WATER APPLICATIONS, AND "SS FORCE MAIN" OR "SSFM" FOR SANITARY SEWER APPLICATIONS.
3. FOR RECLAIMED WATER AND SANITARY SEWER APPLICATIONS, CAST IRON LID SHALL BE EPOXY COATED AT THE FACTORY, OR POWDER COATED, COLOR SHALL BE PURPLE FOR RECLAIMED WATER APPLICATIONS AND GREEN FOR SANITARY SEWER APPLICATIONS.
4. VALVE BOX SHALL BE SET OR ADJUSTED TO GRADE PER DRAWING NO. C-3.1.4, RISER FOR ADJUSTED VALVE BOX SHALL BE PER DRAWING NO. C-3.1.4. FOR OVERLAY ADJUSTMENTS, RISER WILL NOT REQUIRE REPLACEMENT OR EXTENSION IF IT EXTENDS A MINIMUM OF 2 INCHES INTO ADJUSTED VALVE BOX.
5. GRADE RING IS NOT ALLOWED FOR NEW VALVE BOX INSTALLATIONS. CAST IRON GRADE RING (CHRISTY G5 GRADE RING) MAY BE USED FOR OVERLAY ADJUSTMENTS WHEN OVERLAY DEPTH EQUALS THE GRADE RING DEPTH. NO MORE THAN ONE GRADE RING ALLOWED PER BOX.

NO.	REVISION	DATE	STANDARD DETAIL FOR PUBLIC WORKS CONSTRUCTION	SECTION CARSON CITY
			VALVE BOX & LID	DRAWING NO. C-3.1.6 (203,306,307)
APPROVED BY:		07/09		DATE 7/2009

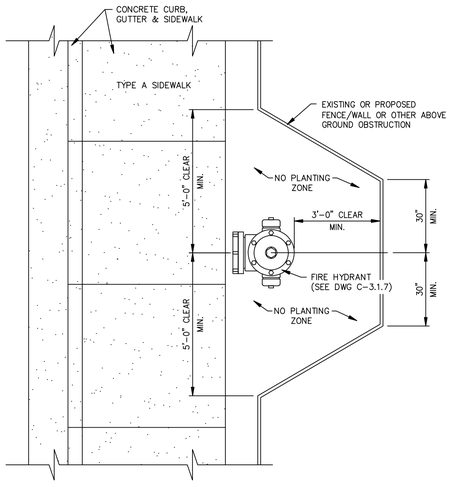

NOTES:

1. SEE DWG. C-3.1.7 FOR FIRE HYDRANT INSTALLATION.
2. INSTALL OR RELOCATE EXISTING FENCE/WALL/LANDSCAPING/MISC IMPROVEMENTS ETC. TO PROVIDE THE MINIMUM CLEARANCE AROUND THE HYDRANT AS SHOWN.

NO.	REVISION	DATE	STANDARD DETAIL FOR PUBLIC WORKS CONSTRUCTION	SECTION CARSON CITY
			FIRE HYDRANT SETBACK /FENCE CLEARANCE	DRAWING NO. C-3.1.7.1 (307)
APPROVED BY:		07/09		DATE 7/2009

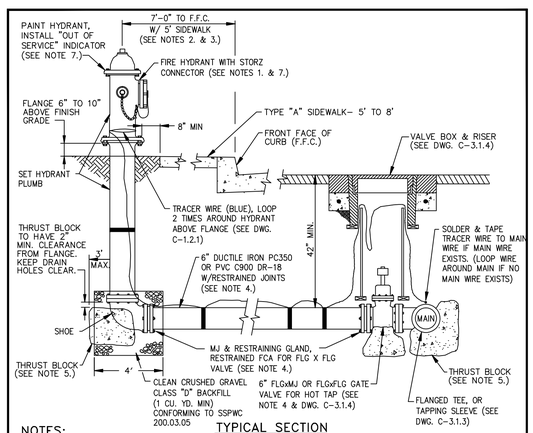

NOTES:

1. FIRE HYDRANTS SHALL BE MUELLER SUPER CENTURION 250 OR WATEROUS 5 1/4 INCH PACER (WB-67-250). ALL HYDRANTS SHALL HAVE HARRINGTON HIHS 5 INCH INTEGRAL HYDRANT STORZ, OR APPROVED EQUAL, WITH BLIND CAP & CABLE AND "OUT OF SERVICE" INDICATOR. OPERATING NUT SHALL BE 1-1/2 INCH PENTAGON. VALVE OPENING SHALL BE 5-1/4 INCHES AND OPEN COUNTER-CLOCKWISE. HYDRANTS SHALL HAVE (2) 2-1/2 INCH HOSE NOZZLES WITH AMERICAN NATIONAL HOSE COUPLING THREADS, (NO SUBSTITUTIONS).
2. HYDRANT SHALL BE INSTALLED SO AS TO PROVIDE CLEARANCE IN ALL DIRECTIONS PER DWG. C-3.1.7.1.
3. FOR 9 FEET-0 INCHES OR WIDER SIDEWALK OR OFFSET SIDEWALK, HYDRANT SHALL BE 2 FEET-0 INCHES TO FRONT FACE OF CURB. IF SIDEWALK IS NOT PRESENT, HYDRANT SHALL BE LOCATED 7 FEET-0 INCHES TO FRONT FACE OF CURB, EXCEPT IN DOWNTOWN AREA.
4. RESTRAINING GLANDS SHALL BE ROMAC GRIPRING PIPE RESTRAINER FOR MECHANICAL JOINT VALVES OR ROMAC RESTRAINED FCA FOR FLANGED VALVES OR APPROVED EQUAL. PIPE RESTRAINT SHALL BE ROMAC "600" SERIES RESTRAINING SYSTEM OR APPROVED EQUAL. RESTRAINING DEVICES SHALL BE FULL CIRCLE (NON POINT) LOADING TYPE. HYDRANT SHOE MAY BE AQUAGRIP, RESTRAINED MECHANICAL JOINT (MJ) OR APPROVED EQUAL.
5. THRUST BLOCKS SHALL HAVE THREE (3) SQUARE FEET MINIMUM AREA AND SHALL BE FORMED AGAINST UNDISTURBED NATIVE OR BACKFILL COMPACTED TO 95%, AND CONFORM TO DWG. C-3.1.14. NO CONCRETE ON HYDRANT DRAIN HOLES OR BOLTS.
6. INSPECTION BY THE CARSON CITY INSPECTOR SHALL BE REQUIRED PRIOR TO BACKFILLING.
7. HYDRANTS SHALL BE PAINTED INTERNATIONAL ORANGE (RUST-OLEUM 7400 HIGH GLOSS ALKYD ENAMEL OR APPROVED EQUAL). DO NOT PAINT 5 INCH STORZ, CAP OR CABLE. RECLAIMED WATER HYDRANTS SHALL BE PAINTED PURPLE. INSTALL "OUT OF SERVICE" INDICATOR COLLAR ON 2-1/2 INCH NOZZLE. INDICATOR SHALL BE HIGHLY VISIBLE, YELLOW WITH BLACK LETTERS, 2-1/2 INCH MINIMUM WIDTH WITH 1 INCH LETTERS STATING "OUT OF SERVICE". INDICATOR SHALL BE "CALPICO" OR EQUAL APPROVED BY THE CARSON CITY ENGINEER OR PUBLIC WORKS DIRECTOR.

NO.	REVISION	DATE	STANDARD DETAIL FOR PUBLIC WORKS CONSTRUCTION	SECTION CARSON CITY
			FIRE HYDRANT ASSEMBLY	DRAWING NO. C-3.1.7 (203,307)
APPROVED BY:		07/09		DATE 7/2009

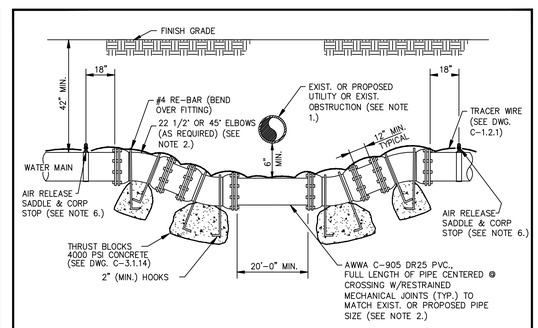

NOTES:

1. ALL POTABLE WATER CROSSINGS OF EXISTING OR PROPOSED UTILITIES, OR OTHER UNDERGROUND OBSTRUCTION SHALL BE DETAILED BY THE DESIGN ENGINEER, AND SHALL MEET THE CRITERIA OUTLINED BY NAC CHAPTER 445A AND THE NDEP BUREAU OF SAFE DRINKING WATER VERTICAL CROSSING CONFLICTS SUMMARY. FOR PURPOSES OF SEPARATION AND PROTECTION OF THE WATER SUPPLY, RECLAIMED WATER SHALL BE CONSIDERED A SEWER LINE. REFER TO DWG C-3.1.2 FOR REQUIRED MITIGATION TO SEWER STORM PIPE LOCATED ABOVE WATER MAIN.
2. THE ENTIRE ASSEMBLY SHALL BE INSTALLED USING AWWA AWWA C-905 DR25 PVC., FULL LENGTH OF PIPE CENTERED @ CROSSING W/RESTRAINED MECHANICAL JOINTS (TYP.) TO MATCH EXIST. OR PROPOSED PIPE SIZE (SEE NOTE 2.) RESTRAINED MECHANICAL JOINT FITTINGS.
3. ALL NUTS & BOLTS SHALL BE COATED WITH COLD APPLIED WATER BASED ENAMEL OR BLACK ASPHALT (AWWA C509, SEC 4.2.2.8 OR C515, SEC 4.2.2.6)
4. CONCRETE FOR THRUST BLOCKS SHALL NOT INTERFERE WITH THE REMOVAL OF BOLTED ASSEMBLIES.
5. AN AIR-RELEASE WITH A POSITIVE GRADE FROM MAIN TO RELEASE, SHALL BE INSTALLED ON BOTH SIDES OF CROSSING (18 INCHES MINIMUM FROM ANY FITTING) UNLESS OTHERWISE NOTED ON THE APPROVED PLANS. ONE AIR-RELEASE MAY BE USED WITH ONE LINE TO EACH SIDE OF CROSSING. SEE DWG. C-3.1.10 & C-3.2.2 FOR INSTALLATION.
6. ROUTING WATER LINE OR "ROPING" UNDER SEWER LINE REQUIRES APPROVAL BY CARSON CITY ENGINEER OR PUBLIC WORKS DIRECTOR.

LOWERING WATER MAINS

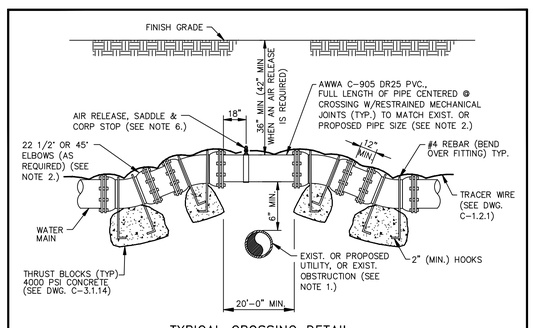

NOTES:

1. ALL POTABLE WATER CROSSINGS OF EXISTING OR PROPOSED UTILITIES, OR OTHER UNDERGROUND OBSTRUCTION SHALL BE DETAILED BY THE DESIGN ENGINEER, AND SHALL MEET THE CRITERIA OUTLINED BY NAC CHAPTER 445A AND THE NDEP BUREAU OF SAFE DRINKING WATER VERTICAL CROSSING CONFLICTS SUMMARY. FOR PURPOSES OF SEPARATION AND PROTECTION OF THE WATER SUPPLY, RECLAIMED WATER SHALL BE CONSIDERED A SEWER LINE.
2. THE ENTIRE ASSEMBLY SHALL BE INSTALLED USING AWWA C-905 DR25 PVC., FULL LENGTH OF PIPE CENTERED @ CROSSING W/RESTRAINED MECHANICAL JOINTS (TYP.) TO MATCH EXIST. OR PROPOSED PIPE SIZE (SEE NOTE 2.) MRESTRAINED MECHANICAL JOINT FITTINGS.
3. ALL NUTS & BOLTS SHALL BE COATED WITH COLD APPLIED WATER BASED ENAMEL OR BLACK ASPHALT (AWWA C509, SEC 4.2.2.8 OR C515, SEC 4.2.2.6)
4. CONCRETE FOR THRUST BLOCKS SHALL NOT INTERFERE WITH THE REMOVAL OF BOLTED ASSEMBLIES.
5. AN AIR-RELEASE WITH POSITIVE GRADE FROM MAIN TO RELEASE SHALL BE INSTALLED AT THE HIGH POINT OF THE MAIN (18 INCHES MINIMUM FROM ANY FITTING) UNLESS OTHERWISE NOTED ON THE APPROVED PLANS. SEE DWG. C-3.1.10 FOR INSTALLATION.
6. ROUTING WATER LINE OVER SEWER LINE REQUIRES APPROVAL BY CARSON CITY ENGINEER OR PUBLIC WORKS DIRECTOR.
7. EVERY EFFORT IS TO BE MADE TO KEEP THE WATER MAIN OR WATER LATERAL 18 INCHES ABOVE THE SEWER MAIN AND THE WATER MAIN 12 INCHES ABOVE SEWER LATERAL.

RAISING WATER MAINS

PROJ. MGR.:	KLD/RCB
PROJ ASSOC.:	CJT
CHECKED BY:	RCB
DWG NO.:	CCCCN15
SCALE (HORIZ):	----
SCALE (VERT):	----
PLOT DATE:	JUNE 2011

CARSON CITY PUBLIC WORKS DEPARTMENT
3505 BUTTI WAY CARSON CITY, NEVADA 89701
PH: 887-2355 FAX: 887-2312

Manhard CONSULTING LTD
3478 Executive Pointe Way, Suite 12 Carson City, NV 89706
PH: (775) 882-5630 FX: (775)883-7982

PROFESSIONAL ENGINEER - STATE OF NEVADA
REBECCA C. BERNIER
Exp12/31/12
CIVIL
No. 19279

REV.	DATE	DESCRIPTION	BY	APP.

EAST-WEST WATER TRANSMISSION MAIN PH 1
PROJECT No: 2011-301
DETAIL SHEET

SHEET 27 OF 35

BID #1011-243

FOR BIDDING PURPOSES ONLY

June 16, 2011 - 12:50 Dwg Name: P:\Cccon15\dwg\Eng\Final Drawings\PLAN SET\DETAILS.dwg Updated By: cthomas

TYPE OF FITTING	90° BEND	45° BEND	11 1/4° OR 22 1/2° BEND	TEE OR DEAD END
TYPICAL INSTALLATION	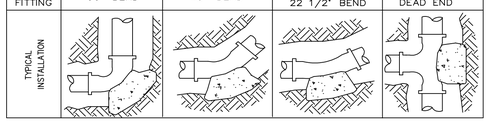			

THRUST BLOCK BEARING AREA (SQ. FT.)

TYPE OF FITTING		90° BEND	45° BEND	11 1/4° OR 22 1/2° BEND	TEE OR DEAD END	TEE W/PLUG	CROSS W/PLUG
SIZE OF PIPE	4"	2	1	1	2	2	2
	6"	4	4	2	4	4	4
	8"	7	4	2	5	7	7
	10"	12	6	3	8	12	12
	12"	16	10	5	12	16	16
	14"	20	12	6	14	20	20
	16"	27	15	8	18	27	27
	18"	45	25	13	32	45	45
	24"	65	35	18	46	65	65

TYPE OF FITTING	CROSS W/PLUG	TEE W/PLUG
TYPICAL INSTALLATION	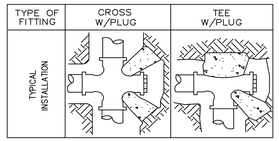	

NOTES:

1. THRUST BLOCKS TO BE CONSTRUCTED OF CONCRETE CONFORMING TO 337.10 OF THE SSPWC AND SHALL HAVE A MINIMUM COMPRESSIVE STRENGTH OF 4000 PSI @ 28 DAYS.
2. AREAS GIVEN ARE FOR CLASS 150 PIPE AT WORKING AND TESTING PRESSURE OF 150 P.S.I., WITH 2000 P.S.F. BEARING CAPACITY. INSTALLATIONS USING DIFFERENT PIPE, TEST PRESSURES, AND/OR SOIL TYPES SHOULD HAVE AREAS ADJUSTED ACCORDINGLY, SUBJECT TO THE APPROVAL OF THE CARSON CITY ENGINEER OR PUBLIC WORKS DIRECTOR.
3. THRUST BLOCKS SHALL BE POURED AGAINST UNDISTURBED SOIL.
4. JOINTS, FLANGES, NUTS, BOLTS AND FACE OF PLUG SHALL BE KEPT CLEAR OF CONCRETE.

NO.	REVISION	DATE	STANDARD DETAIL FOR PUBLIC WORKS CONSTRUCTION	SECTION CARSON CITY
			THRUST BLOCKS	DRAWING NO. C-3.1.14
APPROVED BY:		07/09		DATE 7/2009

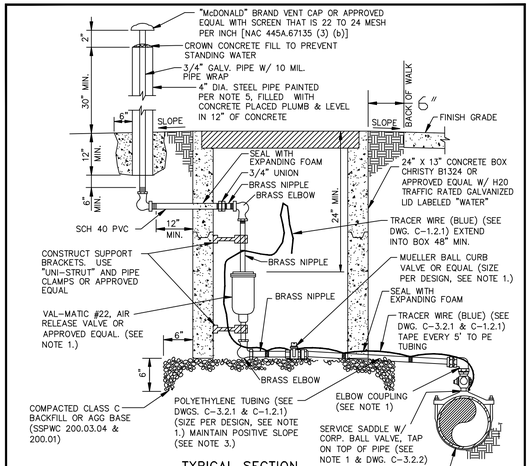

TYPICAL SECTION
NTS

NOTES:

1. SIZE AND PRESSURE CLASS AS INDICATED ON THE PLANS, SHALL BE DETERMINED BY THE DESIGN ENGINEER, MINIMUM SIZE 3/4 INCH. CORP BALL VALVE SHALL BE MUELLER B-20013 OR B-2969, OR FORD FB-500-x WITH MALE I.P. THREADS BOTH ENDS OR APPROVED EQUAL. ELBOW COUPLING SHALL BE MUELLER H-15533 FEMALE I.P. THREAD X CTS 110 COMP, OR FORD L14-xx-Q FEMALE IP THREAD X QUICK JOINT, W/ TUBING LINER OR APPROVED EQUAL.
2. AIR RELEASE VALVES SHALL BE INSTALLED OUTSIDE PAVEMENT SECTION. SLOPE GROUND AWAY FROM AIR RELEASE VALVE BOX OR CONSTRUCT MINIMUM HEIGHT CURBING TO PROTECT FROM FLOODING BY SURFACE WATERS.
3. ALL PIPES SHALL HAVE POSITIVE SLOPE FROM MAIN LINE TO AIR RELEASE VALVE.
4. 1 1/2 INCH TO 2 INCH AIR-RELEASE VALVES REQUIRE A CHRISTY FL36 BOX AND COVER OR APPROVED EQUAL.
5. STEEL PIPE PAINT SHALL BE RUST-OLEUM 7400 HIGH GLOSS SAFETY YELLOW ALKYD ENAMEL OR APPROVED EQUAL.

NO.	REVISION	DATE	STANDARD DETAIL FOR PUBLIC WORKS CONSTRUCTION	SECTION CARSON CITY
			POTABLE WATER AIR RELEASE	DRAWING NO. C-3.1.10 (203,307)
APPROVED BY:		07/09		DATE 7/2009

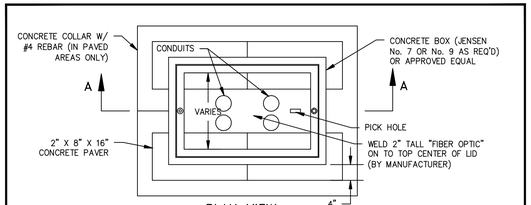

PLAN VIEW
NTS

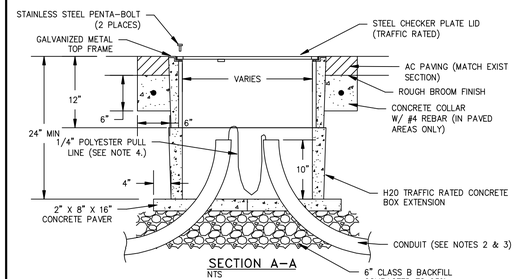

SECTION A-A
NTS

FIBER OPTIC PULL BOX & LID
NTS

NOTES:

1. PULL BOXES AND COVERS SHALL BE H-20 TRAFFIC RATED .
2. CONDUIT SHALL BE SCHEDULE 40 AND CONDUIT ENTERING A PULLBOX SHALL BE TERMINATED WITH A SWEEP AND CAPPED WITH AN END BELL.
3. CONDUITS TO USE 3 FEET RADIUS SWEEPS UNLESS OTHERWISE NOTED. SWEEPS ARE NOT TO BE CUT.
4. CONDUITS SHALL HAVE ¼" POLYESTER PULL LINE WITH SEQUENTIAL FOOTAGE MARKINGS AND A MINIMUM BREAKING STRENGTH OF 400 POUND PULL LINE SHALL EXTEND A MINIMUM OF 3 FEET FROM EACH HANDHOLE.
5. A 6 INCH CLEARANCE SHALL BE MAINTAINED FROM THE PULLBOX LIDS AND THE CONDUCTORS COILED IN THE PULL BOXES.

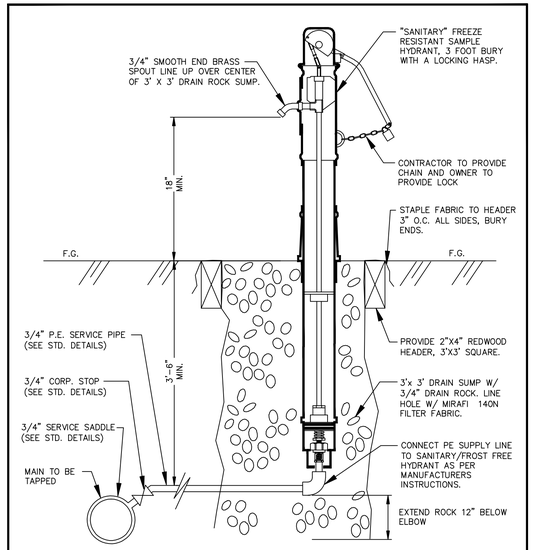

SAMPLING HYDRANT DETAIL
NOT TO SCALE

NOTES:

1. HYDRANT SHALL BE A MURDOCK MODEL M-NPL75 OR APPROVED EQUIVALENT, 3' BURY, WITH A BELOW-GRADE INTERNAL RESERVOIR, A LOCKING HASP AND SMOOTH, PLAIN END SPOUT.
2. UNIT SHALL EXTEND BELOW GRADE LEVEL SO THAT SUPPLY INLET, VALVE AND RESERVOIR ARE POSITIONED BELOW FROST LINE.
3. DURING SHUTOFF, A PISTON SHALL DRAW WATER FROM THE SUPPLY COLUMN INTO THE RESERVOIR, AND AT NEXT USAGE, THE PISTON SHALL EXPEL THE WATER IN THE RESERVOIR THRU THE NOZZLE BEFORE FRESH WATER FLOWS. THE WATER SUPPLY SHALL BE PROTECTED AGAINST ANY SURFACE OR UNDERGROUND CONTAMINATION.
4. HYDRANT SHALL NOT OPERATE USING VENTURI ACTION TO CLEAR WATER TRAPPED IN SUPPLY COLUMN AT SHUT-OFF.

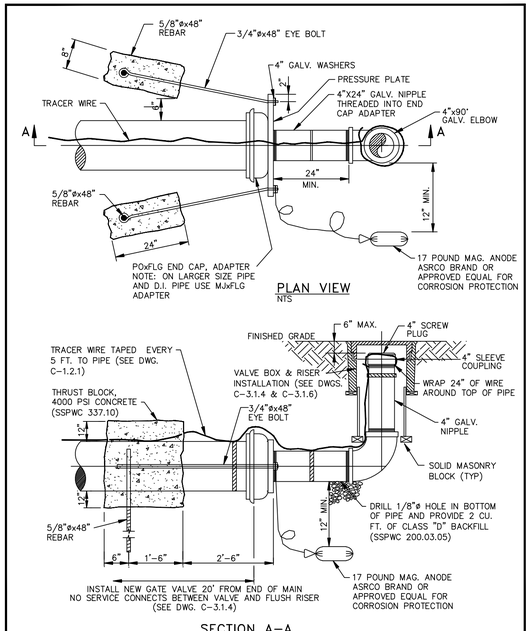

PLAN VIEW
NTS

SECTION A-A
NTS

NO.	REVISION	DATE	STANDARD DETAIL FOR PUBLIC WORKS CONSTRUCTION	SECTION CARSON CITY
			FLUSH ASSEMBLY TEMPORARY	DRAWING NO. C-3.1.13
APPROVED BY:		07/09		DATE 7/2009

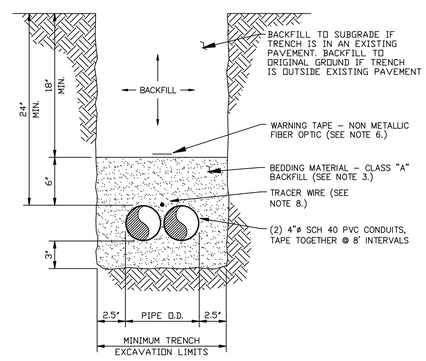

FIBER OPTIC TRENCH SECTION
NTS

NOTES:

1. WATER DENSIFIED BACKFILL AND TUNNELING SHALL BE BY SPECIAL PROVISION ONLY.
2. BACKFILL SHALL CONFORM TO THE REQUIREMENTS OF CLASS E BACKFILL AS SPECIFIED IN SUBSECTION 200.03.06 OF THE STANDARD SPECIFICATIONS FOR PUBLIC WORKS CONSTRUCTION (SSPWC). MATERIAL SHALL BE PLACED IN LIFT THICKNESS SPECIFIED IN SUBSECTION 305.10 OF THE SSPWC AND DENSIFIED TO 90% RELATIVE COMPACTION.
3. BEDDING SHALL CONFORM TO THE REQUIREMENTS OF CLASS A BACKFILL AS SPECIFIED IN SUBSECTION 200.03.02 OF THE SSPWC. MATERIAL SHALL BE DENSIFIED TO 90% RELATIVE COMPACTION.
4. FOR TRENCHES IN ROADWAY SECTION, SEE PAVEMENT PATCH (PERMANENT) DETAIL 1, SHT C19.
5. FOR THE PURPOSE OF PAYMENT; EXCAVATION AND BACKFILL QUANTITIES ARE BASED ON THESE STANDARD DRAWINGS, AND NO ADDITIONAL COMPENSATION WILL BE MADE. SHORING OR SLOPED CUT SLOPES MAY BE NECESSARY, BUT THERE WILL BE NO ADDITIONAL PAYMENT. ALL EXCAVATIONS SHALL CONFORM TO THE LATEST O.S.H.A. REQUIREMENTS.
6. PLACE NON METALLIC WARNING TAPE 1 FOOT ABOVE ALL BURIED PIPES AND CONDUITS.
7. TRACER WIRE SHALL BE 12 GAUGE (MINIMUM THICKNESS) INSULATED SOLID COPPER OR COPPER-CLADSTEEL. CORE WIRE INSULATION SHALL BE 30 MIL HDPE. PLANS SHALL SPECIFY WIRE STRENGTH AND INSULATION THICKNESS FOR BORING APPLICATIONS. SPLICES SHALL BE CONNECTED BY WIRE NUTS, SEALED WITH AQUA SEAL OR SILICON FILLED, AND DOUBLE WRAPPED WITH U/L LISTED ELECTRICAL TAPE. TRACER WIRE COLOR SHALL BE, BLUE FOR WATER, PURPLE FOR RECLAIMED WATER, GREEN FOR SEWER, AND YELLOW FOR ELECTRICAL/FIBER OPTIC.

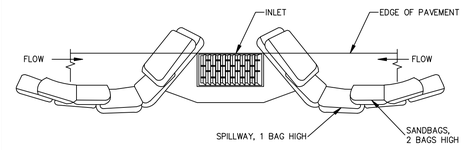

TYPICAL PROTECTION FOR INLET ON SUMP
NTS

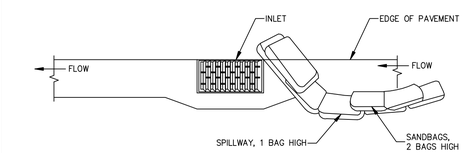

TYPICAL PROTECTION FOR INLET ON GRADE
NTS

NOTES:

1. INTENDED FOR TEMPORARY SHORT-TERM USE.
2. USE TO MANAGE CURB WATER FLOW.
3. SEDIMENT CAPTURED BEHIND SANDBAGS SHALL BE REMOVED WEEKLY DURING CONSTRUCTION.
4. INLET PROTECTION MUST BE PROPERLY MAINTAINED WHILE IN PLACE AND REMOVED WHEN REQUIREMENTS OF NDEP PERMIT HAVE BEEN MET.

NO.	REVISION	DATE	STANDARD DETAIL FOR PUBLIC WORKS CONSTRUCTION	SECTION CARSON CITY
			STORM DRAIN INLET PROTECTION	DRAWING NO. C-4.1.7
APPROVED BY:		7/09		DATE 7/2009

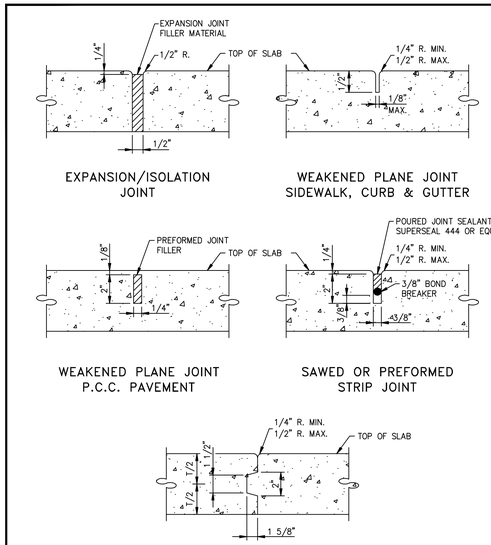

NOTES:

1. ALL CONCRETE EDGING AND JOINTING SHALL CONFORM TO SECTION 312.09 OF THE STANDARD SPECIFICATIONS FOR PUBLIC WORKS CONSTRUCTION (SSPWC).

NO.	REVISION	DATE	STANDARD DETAIL FOR PUBLIC WORKS CONSTRUCTION	SECTION CARSON CITY
			P.C.C. JOINTING DETAILS	DRAWING NO. C-5.1.1 (312)
APPROVED BY:		7/09		DATE 7/2009

PROJ. MGR.: KLD/RCB
PROJ ASSOC.: CJT
CHECKED BY: RCB
DWG NO.: CCCCN15
SCALE (HORIZ): ----
SCALE (VERT): ----
PLOT DATE: JUNE 2011

CARSON CITY PUBLIC WORKS DEPARTMENT
3505 BUTTI WAY CARSON CITY, NEVADA 89701
PH: 887-2355 FAX: 887-2112

Manhard CONSULTING LTD
3476 Executive Pointe Way, Suite 12 Carson City, NV 89706
PH: (775) 883-5620 FAX: (775)883-7282

PROFESSIONAL ENGINEER - STATE OF NEVADA
REBECCA C. BERNIER
Exp12/31/12
CIVIL
No. 19279

REV.	DATE	DESCRIPTION	BY	APP.

BID #1011-243

EAST-WEST WATER TRANSMISSION MAIN PH 1
PROJECT No: 2011-301
DETAIL SHEET

SHEET 28 OF 35

FOR BIDDING PURPOSES ONLY

June 16, 2011 - 12:50 Dwg Name: P:\Cccon15\dwg\Eng\Final Drawings\PLAN SET\DETAILS.dwg Updated By: cthomas

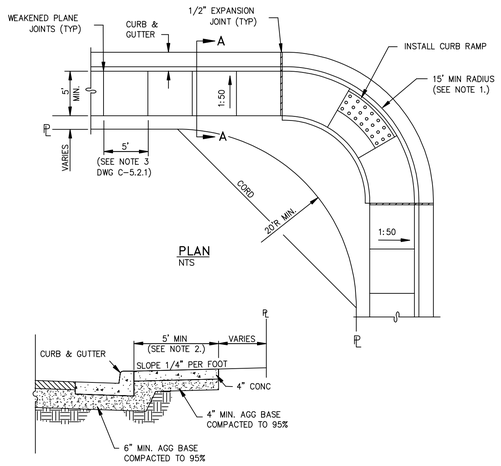

PLAN
NTS

SECTION A–A
NTS

NOTES:

1. MINIMUM CURB RETURN RADIUS SHALL BE 15 FEET UNLESS OTHERWISE APPROVED BY THE CARSON CITY ENGINEER OR PUBLIC WORKS DIRECTOR.
2. SOME STREETS MAY REQUIRE WIDER SIDEWALKS.

NO.	REVISION	DATE	STANDARD DETAIL FOR PUBLIC WORKS CONSTRUCTION	SECTION CARSON CITY
			TYPE "A" SIDEWALK	DRAWING NO. C-5.2.2
APPROVED BY:		7/09		DATE 7/2009

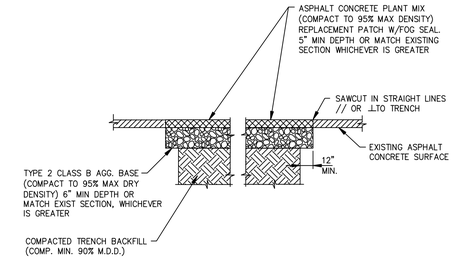

NOTES:

1. IF SAWCUT IS WITHIN 24 INCHES OF EDGE OF A.C. PAVEMENT REMOVE EXISTING PAVEMENT TO THAT EDGE AND REPLACE ENTIRE SECTION.
2. BITUMINOUS MATERIAL SHALL MEET THE REQUIREMENTS OF SECTIONS 201 AND 320 OF THE STANDARD SPECIFICATIONS FOR PUBLIC WORKS CONSTRUCTION.
3. MIXING, SPREADING, AND COMPACTING OF BITUMINOUS PAVEMENT SHALL BE DONE ONLY WHEN THE SURFACE ON WHICH THE MATERIALS ARE TO BE PLACED IS DRY AND WHEN THE ATMOSPHERIC TEMPERATURE IS ABOVE 50 DEGREES FAHRENHEIT AND HAS NOT BEEN BELOW 40 DEGREES FAHRENHEIT DURING THE PRECEDING 24 HOURS.
4. FINISHED SURFACE VARIATIONS SHALL BE 0 TO 0.25 INCHES ABOVE EXISTING SURFACE. ALL HUMPS EXCEEDING THIS TOLERANCE SHALL BE CORRECTED BY REMOVAL OF MATERIAL AND REPLACING IT WITH NEW MATERIAL. FINISHED SURFACE OF PATCH SHALL NOT BE BELOW EXISTING ADJACENT SURFACE.
5. PLANTMIX BITUMINOUS PAVEMENT SURFACE COURSE SHALL BE PG-64-22 TYPE 3 AND SUB SURFACE COURSES SHALL BE PG-64-22 TYPE 3 UNLESS OTHERWISE NOTED.
6. PLANTMIX BITMUMINOUS PAVEMENT PATCHES SHALL MATCH EXISTING SECTION OR HAVE A MINIMUM THICKNESS OF 5 INCHES, WHICHEVER IS GREATER.
7. PLANS SHALL SPECIFY PAVEMENT PATCH AND AGGREGATE BASE DEPTHS AS SPECIFIED BY THE DESIGN ENGINEER.

NO.	REVISION	DATE	STANDARD DETAIL FOR PUBLIC WORKS CONSTRUCTION	SECTION CARSON CITY
			PAVEMENT PATCH	DRAWING NO. C-5.1.6
APPROVED BY:		7/09		DATE 7/2009

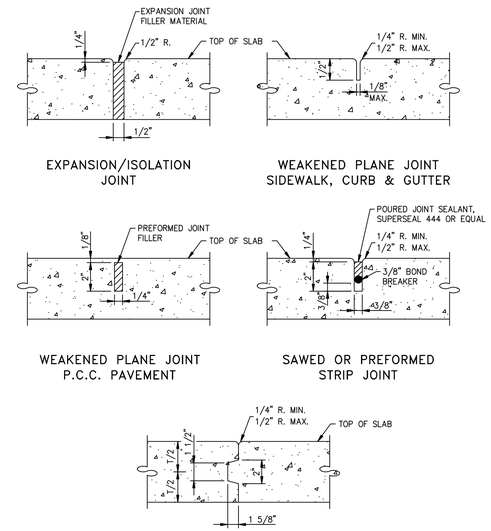

NOTES:

1. ALL CONCRETE EDGING AND JOINTING SHALL CONFORM TO SECTION 312.09 OF THE STANDARD SPECIFICATIONS FOR PUBLIC WORKS CONSTRUCTION (SSPWC).

NO.	REVISION	DATE	STANDARD DETAIL FOR PUBLIC WORKS CONSTRUCTION	SECTION CARSON CITY
			P.C.C. JOINTING DETAILS	DRAWING NO. C-5.1.1 (312)
APPROVED BY:		7/09		DATE 7/2009

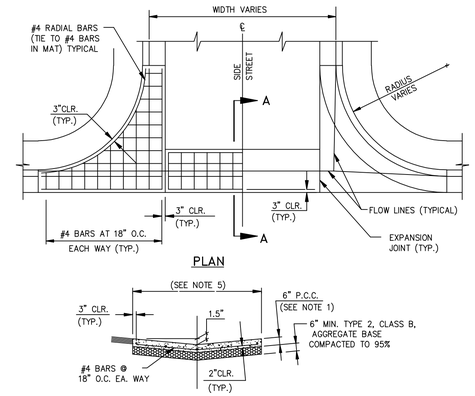

PLAN

SECTION A–A

NOTES:

1. PORTLAND CEMENT CONCRETE (P.C.C.) SHALL HAVE THE FOLLOWING CHARACTERISTICS: SYNTHETIC FIBER-REINFORCEMENT (AT A MINIMUM OF 1 POUND PER CUBIC YARD), 4000 PSI MIN. COMPRESSIVE STRENGTH @ 28 DAYS, MIN. 6 SACKS OF CEMENT PER CUBIC YARD WITH A MAX. WATER/CEMENT RATIO OF 0.45, AIR ENTRAINMENT 6% ±1.5%, SLUMP AT 1 TO 4 INCHES. ALL MATERIALS SHALL CONFORM TO SSPWC SECTION 202. POLYPROPYLENE FIBERS SHALL BE ADDED TO THE P.C.C. PER THE MANUFACTURER'S RECOMMENDATIONS.
2. FOR INDUSTRIAL AREAS, AN ENGINEERED DESIGN IS REQUIRED.
3. AGGREGATE BASE SHALL BE ENGINEERED TYPE 2, CLASS B WITH 95% COMPACTION.
4. VALLEY GUTTER SHALL HAVE WEAKENED PLANE JOINTS EVERY 10 FEET.
5. LOCAL AND COLLECTOR STREETS, WIDTH = 6 FEET. ARTERIAL STREETS (DRIVEWAYS ONLY), WIDTH = 10 FEET.
6. VALLEY GUTTER SECTIONS (SPANDRELS) ALONG CURB & GUTTER SHALL BE A MONOLITHIC POUR AS SHOWN.
7. ALL CONCRETE EDGING AND JOINTING SHALL BE CONSTRUCTED IN ACCORDANCE WITH STANDARD DETAIL C-5.1.1 AND CONFORM TO SECTION 312.09 OF THE STANDARD SPECIFICATIONS FOR PUBLIC WORKS CONSTRUCTION (SSPWC).

NO.	REVISION	DATE	STANDARD DETAIL FOR PUBLIC WORKS CONSTRUCTION	SECTION CARSON CITY
			P.C.C. VALLEY GUTTER	DRAWING NO. C-5.1.2
APPROVED BY:		7/09		DATE 7/2009

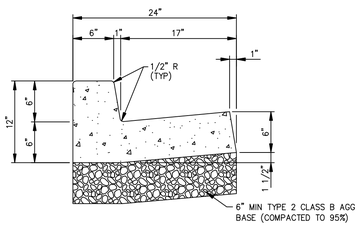

NOTES:

1. PORTLAND CEMENT CONCRETE (P.C.C.) SHALL HAVE THE FOLLOWING CHARACTERISTICS: SYNTHETIC FIBER-REINFORCEMENT (AT A MINIMUM OF 1 POUND PER CUBIC YARD), 4000 PSI MIN COMPRESSIVE STRENGTH @ 28 DAYS, MIN 6 SACKS OF CEMENT PER CUBIC YARD WITH A MAX. WATER/CEMENT RATIO OF 0.45, AIR ENTRAINMENT 6% ±1.5%, SLUMP AT 1 TO 4 INCHES ALL MATERIALS SHALL CONFORM TO SECTION 202 OF THE STANDARD SPECIFICATIONS FOR PUBLIC WORKS CONSTRUCTION.
2. ALL CONCRETE CURB & GUTTER SHALL HAVE 1/2 INCH EXPANSION JOINTS EVERY 30 FEET (UNLESS APPROVED OTHERWISE BY THE ENGINEER) AND AT ALL CURB RETURNS AND SHALL HAVE WEAKENED PLANE JOINTS EVERY 10 FEET. CONCRETE EDGING AND JOINTING SHALL BE CONSTRUCTED IN ACCORDANCE WITH STANDARD DETAIL C-5.1.1 AND CONFORM TO SECTION 312.09 OF THE STANDARD SPECIFICATIONS FOR PUBLIC WORKS CONSTRUCTION (SSPWC).
3. ALL AGGREGATE BASE SHALL BE TYPE 2, CLASS B AND CONFORM TO SECTION 200.01. OF THE STANDARD SPECIFICATIONS FOR PUBLIC WORKS CONSTRUCTION, AND SHALL BE MECHANICALLY COMPACTED TO 95% COMPACTION, IN CONFORMANCE WITH SECTION 308.05 OF THE STANDARD SPECIFICATIONS FOR PUBLIC WORKS CONSTRUCTION.
4. CURBS SHALL BE MARKED WITH A 2 INCH "S" ON THE TOP OF CURB AT SEWER LATERAL LOCATIONS.

NO.	REVISION	DATE	STANDARD DETAIL FOR PUBLIC WORKS CONSTRUCTION	SECTION CARSON CITY
			PCC CURB & GUTTER TYPE 1	DRAWING NO. C-5.1.3
APPROVED BY:		7/09		DATE 7/2009

1. NO CONCRETE SHALL BE PLACED UNTIL FORMS AND SUBGRADE ARE INSPECTED AND APPROVED BY CARSON CITY PUBLIC WORKS.
2. PORTLAND CEMENT CONCRETE (P.C.C.) SHALL HAVE THE FOLLOWING CHARACTERISTICS: SYNTHETIC FIBER-REINFORCEMENT (AT A MINIMUM OF 1 POUND PER CUBIC YARD), WITH COARSE AGGREGATE GRADATION CONFORMING TO SIZE No. 67 PER SECTION 200.05.03 OF THE STANDARD SPECIFICATIONS, AND SHALL HAVE A 1 TO 4 INCH SLUMP, AND 4 TO 7 PERCENT ENTRAINED AIR. 4000 PSI MIN COMPRESSIVE STRENGTH @ 28 DAYS, MIN 6 SACKS OF TYPE II CEMENT PER CUBIC YARD WITH A MAX. WATER/CEMENT RATIO OF 0.45, AIR ENTRAINMENT 6% ±1.5%, SLUMP AT 1 TO 4 INCHES ALL MATERIALS SHALL CONFORM TO SSPWC SECTION 202. OF THE STANDARD SPECIFICATIONS FOR PUBLIC WORKS CONSTRUCTION.
3. ALL CONCRETE EDGING AND JOINTING SHALL BE CONSTRUCTED IN ACCORDANCE WITH STD. DETAIL C-5.1.1 AND CONFORM TO SEC. 312.09 OF THE STANDARD SPECIFICATIONS FOR PUBLIC WORKS CONSTRUCTION (SSPWC).
4. IF OBSTRUCTIONS SUCH AS INLETS, UTILITY POLES, FIRE HYDRANTS, ETC. ARE ENCOUNTERED, THE LOCATION AND DIMENSIONS MAY BE ADJUSTED UPON APPROVAL BY CARSON CITY PUBLIC WORKS. A MINIMUM SURFACE OF 5 FEET X 5 FEET CLEAR IS REQUIRED WHEN DIRECTION OF TRAVEL MAY CHANGE AND A MINIMUM SURFACE OF 4 FEET CLEAR IS REQUIRED WHERE DIRECTION OF TRAVEL IS NOT EXPECTED TO CHANGE, UNLESS OTHERWISE APPROVED BY THE CARSON CITY ENGINEER OR PUBLIC WORKS DIRECTOR.
5. EXISTING CONCRETE SHALL BE REMOVED TO A NEAT SAWCUT LINE OR NEAREST EXPANSION JOINT.
6. ALL AGGREGATE BASE SHALL BE TYPE 2, CLASS B AND SHALL CONFORM TO SEC.200.01. OF THE STANDARD SPECIFICATIONS FOR PUBLIC WORKS CONSTRUCTION (SSPWC).
7. NEW CONCRETE SHALL HAVE A HEAVY BROOM FINISH PERPENDICULAR TO SIDEWALK.

NO.	REVISION	DATE	STANDARD DETAIL FOR PUBLIC WORKS CONSTRUCTION	SECTION CARSON CITY
			SIDEWALK AND DRIVEWAY GENERAL NOTES	DRAWING NO. C-5.2.1
APPROVED BY:		7/09		DATE 7/2009

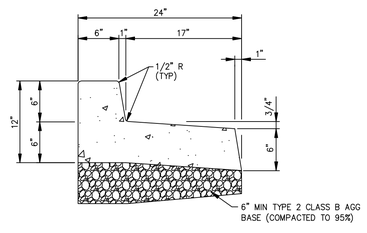

NOTES:

1. PORTLAND CEMENT CONCRETE (P.C.C.) SHALL HAVE THE FOLLOWING CHARACTERISTICS: SYNTHETIC FIBER-REINFORCEMENT (AT A MINIMUM OF 1 POUND PER CUBIC YARD), 4000 PSI MIN COMPRESSIVE STRENGTH @ 28 DAYS, MIN 6 SACKS OF CEMENT PER CUBIC YARD WITH A MAX. WATER/CEMENT RATIO OF 0.45, AIR ENTRAINMENT 6% ±1.5%, SLUMP AT 1 TO 4 INCHES ALL MATERIALS SHALL CONFORM TO SECTION 202 OF THE STANDARD SPECIFICATIONS FOR PUBLIC WORKS CONSTRUCTION.
2. ALL CONCRETE CURB & GUTTER SHALL HAVE 1/2 INCH EXPANSION JOINTS EVERY 30 FEET (UNLESS APPROVED OTHERWISE BY THE ENGINEER) AND AT ALL CURB RETURNS AND SHALL HAVE WEAKENED PLANE JOINTS EVERY 10 FEET. CONCRETE EDGING AND JOINTING SHALL BE CONSTRUCTED IN ACCORDANCE WITH STANDARD DETAIL C-5.1.1 AND CONFORM TO SECTION 312.09 OF THE STANDARD SPECIFICATIONS FOR PUBLIC WORKS CONSTRUCTION (SSPWC).
3. ALL AGGREGATE BASE SHALL BE TYPE 2, CLASS B AND CONFORM TO SECTION 200.01. OF THE STANDARD SPECIFICATIONS FOR PUBLIC WORKS CONSTRUCTION, AND SHALL BE MECHANICALLY COMPACTED TO 95% COMPACTION, IN CONFORMANCE WITH SECTION 308.05 OF THE STANDARD SPECIFICATIONS FOR PUBLIC WORKS CONSTRUCTION.
4. CURBS SHALL BE MARKED WITH A 2 INCH "S" ON THE TOP OF CURB AT SEWER LATERAL LOCATIONS.

REVERSE CURB & GUTTER

1. NO CONCRETE SHALL BE PLACED UNTIL FORMS AND SUBGRADE ARE INSPECTED AND APPROVED BY CARSON CITY PUBLIC WORKS.
2. PORTLAND CEMENT CONCRETE (P.C.C.) SHALL HAVE THE FOLLOWING CHARACTERISTICS: SYNTHETIC FIBER-REINFORCEMENT (AT A MINIMUM OF 1 POUND PER CUBIC YARD), WITH COARSE AGGREGATE GRADATION CONFORMING TO SIZE No. 67 PER SECTION 200.05.03 OF THE STANDARD SPECIFICATIONS, AND SHALL HAVE A 1 TO 4 INCH SLUMP, AND 4 TO 7 PERCENT ENTRAINED AIR. 4000 PSI MIN COMPRESSIVE STRENGTH @ 28 DAYS, MIN 6 SACKS OF TYPE II CEMENT PER CUBIC YARD WITH A MAX. WATER/CEMENT RATIO OF 0.45, AIR ENTRAINMENT 6% ±1.5%, SLUMP AT 1 TO 4 INCHES ALL MATERIALS SHALL CONFORM TO SSPWC SECTION 202. OF THE STANDARD SPECIFICATIONS FOR PUBLIC WORKS CONSTRUCTION.
3. ALL CONCRETE EDGING AND JOINTING SHALL BE CONSTRUCTED IN ACCORDANCE WITH STD. DETAIL C-5.1.1 AND CONFORM TO SEC. 312.09 OF THE STANDARD SPECIFICATIONS FOR PUBLIC WORKS CONSTRUCTION (SSPWC).
4. IF OBSTRUCTIONS SUCH AS INLETS, UTILITY POLES, FIRE HYDRANTS, ETC. ARE ENCOUNTERED, THE LOCATION AND DIMENSIONS MAY BE ADJUSTED UPON APPROVAL BY CARSON CITY PUBLIC WORKS. A MINIMUM SURFACE OF 5 FEET X 5 FEET CLEAR IS REQUIRED WHEN DIRECTION OF TRAVEL MAY CHANGE AND A MINIMUM SURFACE OF 4 FEET CLEAR IS REQUIRED WHERE DIRECTION OF TRAVEL IS NOT EXPECTED TO CHANGE, UNLESS OTHERWISE APPROVED BY THE CARSON CITY ENGINEER OR PUBLIC WORKS DIRECTOR.
5. EXISTING CONCRETE SHALL BE REMOVED TO A NEAT SAWCUT LINE OR NEAREST EXPANSION JOINT.
6. ALL AGGREGATE BASE SHALL BE TYPE 2, CLASS B AND SHALL CONFORM TO SEC.200.01. OF THE STANDARD SPECIFICATIONS FOR PUBLIC WORKS CONSTRUCTION (SSPWC).
7. NEW CONCRETE SHALL HAVE A HEAVY BROOM FINISH PERPENDICULAR TO SIDEWALK.

NO.	REVISION	DATE	STANDARD DETAIL FOR PUBLIC WORKS CONSTRUCTION	SECTION CARSON CITY
			SIDEWALK AND DRIVEWAY GENERAL NOTES	DRAWING NO. C-5.2.1
APPROVED BY:		7/09		DATE 7/2009

PROJ. MGR.: KLD/RCB
PROJ ASSOC.: CJT
CHECKED BY: RCB
DWG NO.: CCCCN15
SCALE (HORIZ): ----
SCALE (VERT): ----
PLOT DATE: JUNE 2011

CARSON CITY PUBLIC WORKS DEPARTMENT
3505 BUTTI WAY CARSON CITY, NEVADA 89701
PH: 887-2355 FAX: 887-2112

Manhard CONSULTING LTD
3476 Executive Pointe Way, Suite 12 Carson City, NV 89706
PH: (775) 882-5830 FAX: (775)883-7282

PROFESSIONAL ENGINEER - STATE OF NEVADA
REBECCA C. BERNIER
Exp12/31/12
CIVIL
No. 19279

REV.	DATE	DESCRIPTION	BY	APP.

BID #1011-243

EAST-WEST WATER TRANSMISSION MAIN PH 1
PROJECT No: 2011-301
DETAIL SHEET

SHEET 29 OF 35

FOR BIDDING PURPOSES ONLY

June 16, 2011 - 12:50 Dwg Name: P:\Cccon15\dwg\Eng\Final Drawings\PLAN SET\DETAILS.dwg Updated By: cthomas

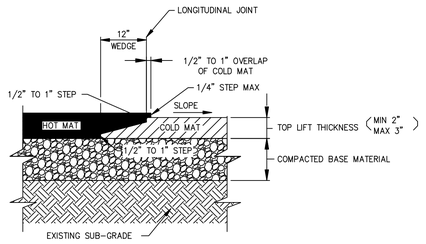

NOTES:

1. NOTCHED WEDGE AC JOINTS SHALL BE LONGITUDINAL AND USED IN SURFACE LIFT ONLY.
2. ALL ASPHALT SHALL BE CONSTRUCTED IN ACCORDANCE WITH SECTIONS 201 AND 320 OF THE STANDARD SPECIFICATIONS FOR PUBLIC WORKS CONSTRUCTION (SSPWC).
3. ALL ROAD BASE SHALL BE CONSTRUCTED IN ACCORDANCE WITH SECTIONS 200 AND 308 OF THE STANDARD SPECIFICATIONS FOR PUBLIC WORKS CONSTRUCTION (SSPWC).
4. COLD MAT SHALL BE DEFINED AS A MAT WITH A SURFACE TEMPERATURE OF 185 DEGREES OR LESS.

NO.	REVISION	DATE	STANDARD DETAIL FOR PUBLIC WORKS CONSTRUCTION	SECTION CARSON CITY
			NOTCHED WEDGE AC JOINT	DRAWING NO. C-5.1.7
APPROVED BY:		7/09		DATE 7/2009

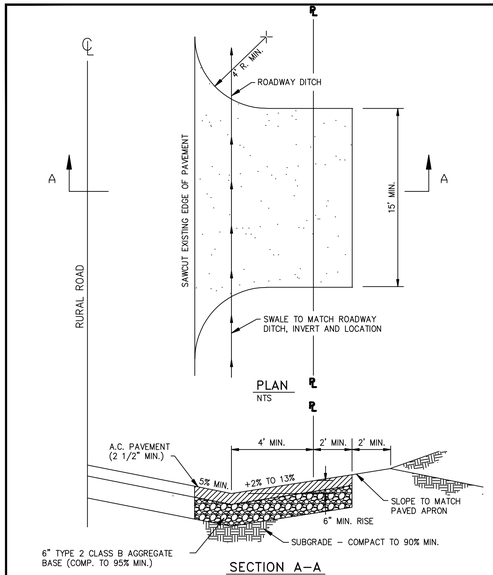

NOTES:

1. IN LIEU OF A.C. SURFACING A 6 INCH THICK P.C.C. SLAB WITH 6 INCH x 6 INCH WWF AND 6 INCHES OF SELECT GRANULAR BASE (COMP. TO 95% MIN.) MAY BE USED.

NO.	REVISION	DATE	STANDARD DETAIL FOR PUBLIC WORKS CONSTRUCTION	SECTION CARSON CITY
			A.C. DRIVEWAY APRON RURAL ROADS	DRAWING NO. C-5.2.5
APPROVED BY:		7/09		DATE 7/2009

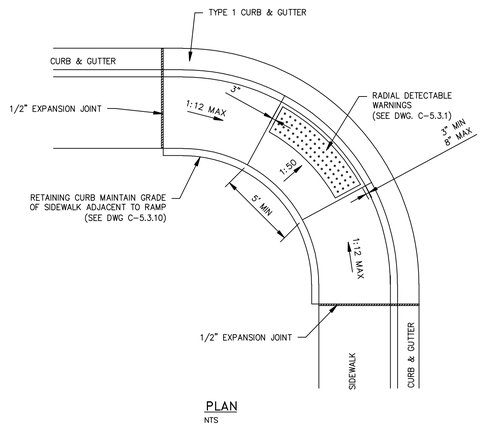

NOTES:

1. NOT FOR USE WITH OFFSET SIDEWALKS.
2. RETAINING CURBS ARE TO BE USED IN ALL CASES AND FINISH GRADE AT BACK OF SIDEWALK IS TO BE RAISED TO TOP OF RETAINING CURB ELEVATION.
3. SEE "CURB RAMP GENERAL NOTES" DWG C-5.3.1 FOR FURTHER REQUIREMENTS.

NO.	REVISION	DATE	STANDARD DETAIL FOR PUBLIC WORKS CONSTRUCTION	SECTION CARSON CITY
			PARALLEL CURB RAMP APEX	DRAWING NO. C-5.3.5
APPROVED BY:		7/09		DATE 7/2009

1. NO CONCRETE SHALL BE PLACED UNTIL FORMS AND SUBGRADE ARE INSPECTED BY CARSON CITY ENGINEERING DIVISION.
2. PORTLAND CEMENT CONCRETE (P.C.C.) SHALL HAVE THE FOLLOWING CHARACTERISTICS: SYNTHETIC FIBER-REINFORCEMENT (AT A MINIMUM OF 1 POUND PER CUBIC YARD), 4000 PSI MIN COMPRESSIVE STRENGTH @ 28 DAYS, MIN 6 SACKS OF CEMENT PER CUBIC YARDS WITH A MAX. WATER/CEMENT RATIO OF 0.45, AIR ENTRAINMENT 6% ±1.5%, SLUMP AT 1 TO 4 INCHES ALL MATERIALS SHALL CONFORM TO SSPWC SECTION 202. OF THE STANDARD SPECIFICATIONS FOR PUBLIC WORKS CONSTRUCTION.
3. ALL CONCRETE EDGING AND JOINTING SHALL BE CONSTRUCTED IN ACCORDANCE WITH STD. DETAIL C-5.1.1 AND CONFORM TO SEC. 312.09 OF THE STANDARD SPECIFICATIONS FOR PUBLIC WORKS CONSTRUCTION (SSPWC).
4. IF OBSTRUCTIONS SUCH AS INLETS, UTILITY POLES, FIRE HYDRANTS, ETC. ARE ENCOUNTERED, THE LOCATION AND DIMENSIONS MAY BE ADJUSTED UPON APPROVAL BY CARSON CITY ENGINEER OR PUBLIC WORKS DIRECTOR. A MINIMUM LANDING OF 5 FEET X 5 FEET CLEAR IS REQUIRED WHEN DIRECTION OF TRAVEL MAY CHANGE. A MINIMUM OF 4 FEET CLEAR IS MAY BE USED UPON APPROVAL OF THE CARSON CITY ENGINEER OR PUBLIC WORKS DIRECTOR WHERE DIRECTION OF TRAVEL IS NOT EXPECTED TO CHANGE.
5. WHEN A CROSSWALK IS SERVICED BY RAMP, LANDINGS SHALL BE CONTAINED WITHIN THE CROSSWALK AREA.
6. EXISTING CONCRETE SHALL BE REMOVED TO A NEAT SAWCUT LINE OR NEAREST EXPANSION JOINT.
7. PLANTMIX BITUMINOUS SURFACE SHALL BE FLUSH WITH THE EDGE OF THE GUTTER PAN IN THE AREA OF THE CURB RAMP. GUTTER SHALL MAINTAIN POSITIVE DRAINAGE TO PREVENT PONDING.
8. ALL AGGREGATE BASE SHALL BE TYPE 2, CLASS B AND SHALL CONFORM TO SEC.200.01. OF THE STANDARD SPECIFICATIONS FOR PUBLIC WORKS CONSTRUCTION (SSPWC).
9. NEW CONCRETE SHALL HAVE A HEAVY BROOM FINISH PERPENDICULAR TO SIDEWALK.
10. DETECTABLE WARNINGS SHALL BE EAST JORDAN IRON WORKS 7005 SERIES CAST IRON DETECTABLE WARNING PLATES OR APPROVED EQUAL. INSTALLED PER MANUFACTURERS INSTALLATION GUIDELINES AND CONFORM TO ADAAG (4.29) "DETECTABLE WARNINGS". COLOR: ASPHALT DIPPED UNLESS OTHERWISE APPROVED BY CARSON CITY ENGINEER OR PUBLIC WORKS DIRECTOR. RADIAL DETECTABLE WARNINGS SHALL BE USED WHEN REQUIRED TO MAINTAIN MINIMUM CLEARANCE OF 3 INCHES AND MAXIMUM CLEARANCE OF 8 INCHES FROM DETECTABLE WARNINGS TO BACK FACE OF CURB. RADIAL DETECTABLE WARNINGS SHALL HAVE A RADIUS WITHIN 5 FEET OF BACK FACE OF CURB RADIUS.

NO.	REVISION	DATE	STANDARD DETAIL FOR PUBLIC WORKS CONSTRUCTION	SECTION CARSON CITY
			CURB RAMP GENERAL NOTES	DRAWING NO. C-5.3.1
APPROVED BY:		7/09		DATE 7/2009

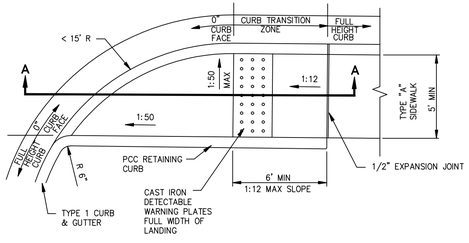

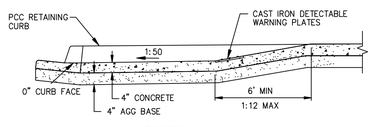

NOTES:

1. LINEAR SINGLE TRANSITION CURB RAMP TO BE USED ONLY AT RETURNS HAVING LESS THAN A 15 FOOT RADIUS.
2. NOT FOR USE WITH OFFSET SIDEWALKS.
3. RETAINING CURBS ARE TO BE USED IN ALL CASES AND EXISTING GRADE AT BACK OF SIDEWALK IS TO BE RAISED TO TOP OF RETAINING CURB ELEVATION.
4. SEE "CURB RAMP GENERAL NOTES" DWG C-5.3.1 FOR FURTHER REQUIREMENTS.

NO.	REVISION	DATE	STANDARD DETAIL FOR PUBLIC WORKS CONSTRUCTION	SECTION CARSON CITY
			LINEAR CURB RAMP SINGLE ADJACENT	DRAWING NO. C-5.3.8
APPROVED BY:		7/09		DATE 7/2009

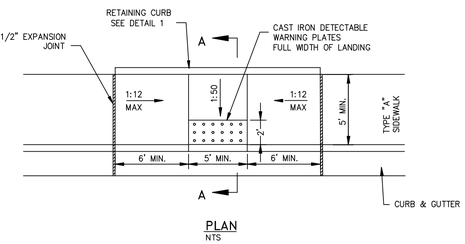

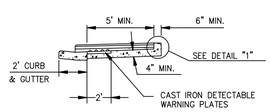

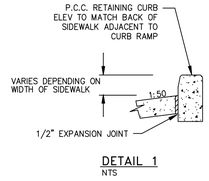

NOTES:

1. RETAINING CURB TO BE USED IN ALL CASES. MAINTAIN SLOPE OF SIDEWALK OUTSIDE OF CURB RAMP.
2. SEE "CURB RAMP GENERAL NOTES" DWG C-5.3.1 FOR FURTHER REQUIREMENTS.

NO.	REVISION	DATE	STANDARD DETAIL FOR PUBLIC WORKS CONSTRUCTION	SECTION CARSON CITY
			MID BLOCK CURB RAMP	DRAWING NO. C-5.3.9
APPROVED BY:		7/09		DATE 7/2009

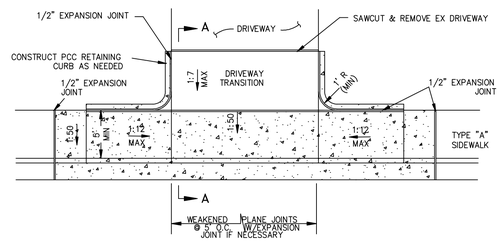

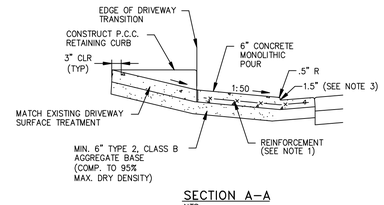

NOTES:

1. COMMERCIAL DRIVEWAYS TO HAVE 6 INCH X 6 INCH 10/10 WIRE MESH EXTENDED INTO GUTTER PAN.
2. DRIVEWAY LANDING, SIDEWALK, CURB & GUTTER TO BE MONOLITHIC POUR TO A.C. LINE.
3. CURB HEIGHT AT LANDING SHALL BE 1 INCH MINIMUM AND 2 INCH MAXIMUM (3 INCH MAX UPON CARSON CITY PUBLIC WORKS APPROVAL) 2 INCH RADIUS TO BE USED WHEN CURB HEIGHT AT LANDING IS GREATER THAN 2 INCHES.
4. DRIVEWAY APRONS SHALL BE CONSTRUCTED IN COMPLIANCE WITH STANDARD DETAILS C-5.1.1 AND C-5.2.1.

NO.	REVISION	DATE	STANDARD DETAIL FOR PUBLIC WORKS CONSTRUCTION	SECTION CARSON CITY
			P.C.C. DRIVEWAY APRON TYPE 1	DRAWING NO. C-5.2.3
APPROVED BY:		7/09		DATE 7/2009

PROJ. MGR.: KLD/RCB
PROJ ASSOC.: CJT
CHECKED BY: RCB
DWG NO.: CCCCN15
SCALE (HORIZ): ----
SCALE (VERT): ----
PLOT DATE: JUNE 2011

CARSON CITY PUBLIC WORKS DEPARTMENT
3505 BUTTI WAY CARSON CITY, NEVADA 89701
PH: 887-2355 FAX: 887-2112

Manhard CONSULTING LTD
3478 Executive Pointe Way, Suite 12 Carson City, NV 89706
PH: (775) 882-5620 FX: (775)883-7282

PROFESSIONAL ENGINEER - STATE OF NEVADA
REBECCA C. BERNIER
Exp12/31/12
CIVIL
No. 19279

REV.	DATE	DESCRIPTION	BY	APP.

EAST-WEST WATER TRANSMISSION MAIN PH 1
PROJECT No: 2011-301
DETAIL SHEET

SHEET 30 OF 35

FOR BIDDING PURPOSES ONLY

BID #1011-243

June 16, 2011 - 12:50 Dwg Name: P:\Cccon15\dwg\Eng\Final Drawings\PLAN SET\DETAILS.dwg Updated By: cthomas

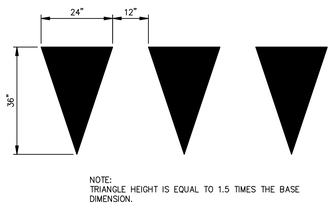

NOTES:

1. ALL STRIPING SHALL CONFORM TO THE MANUAL ON UNIFORM TRAFFIC CONTROL DEVICES (MUTCD) FOR STREETS AND HIGHWAYS, CURRENT EDITION.
2. ALL PAINTED STRIPING AND PAVEMENT LEGENDS SHALL CONFORM TO CARSON CITY PUBLIC WORKS SPECIFICATIONS.
3. ALL INLAY TAPE STRIPING AND/OR PAVEMENT LEGENDS SHALL BE INSTALLED PER MANUFACTURERS RECOMMENDATIONS.
4. YIELD LINE TO BE INSTALLED FROM EDGE OF LANE TO EDGE OF PAVEMENT OR LIP OF CURB.

NO.	REVISION	DATE	STANDARD DETAIL FOR PUBLIC WORKS CONSTRUCTION	SECTION CARSON CITY
			YIELD LINE LAYOUT	DRAWING NO. C-5.4.4
APPROVED BY:		7/09		DATE 7/2009

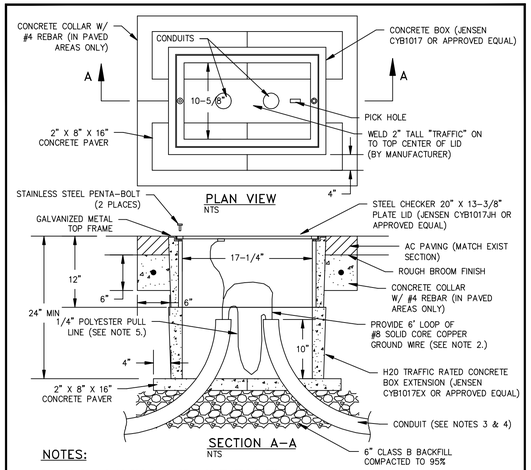

NOTES:

1. PULL BOXES AND COVERS SHALL BE H-20 TRAFFIC RATED .
2. COVERS SHALL BE CADWELD BONDED TO GROUND WITH A STRANDED 6 AWG WIRE.
3. CONDUIT SHALL BE SCHEDULE 80 AND CONDUIT ENTERING A PULLBOX SHALL BE TERMINATED WITH A SWEEP AND CAPPED WITH AN END BELL.
4. CONDUITS TO USE 3 FEET RADIUS SWEEPS UNLESS OTHERWISE NOTED. SWEEPS ARE NOT TO BE CUT.
5. CONDUITS SHALL HAVE ¼" POLYESTER PULL LINE WITH SEQUENTIAL FOOTAGE MARKINGS AND A MINIMUM BREAKING STRENGTH OF 400 POUND PULL LINE SHALL EXTEND A MINIMUM OF 3 FEET FROM EACH HANDHOLE.
6. NO. 5 PULL BOXES SHALL BE USED WHERE CONDUIT RUNS CONTAIN TRAFFIC SIGNAL UNLESS OTHERWISE APPROVED BY THE CARSON CITY ENGINEER OR PUBLIC WORKS DIRECTOR. CABLE. NO. 3-1/2 PULL BOXES MAY BE USED AT ALL OTHER LOCATIONS.
7. A 6 INCH CLEARANCE SHALL BE MAINTAINED FROM THE PULLBOX LIDS AND THE CONDUCTORS COILED IN THE PULL BOXES.

NO.	REVISION	DATE	STANDARD DETAIL FOR PUBLIC WORKS CONSTRUCTION	SECTION CARSON CITY
			TRAFFIC SIGNAL PULL BOX & LID	DRAWING NO. C-5.5.4
APPROVED BY:		7/09		DATE 7/2009

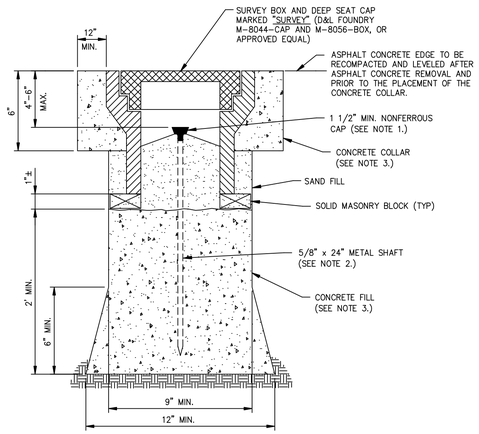

NOTES:

1. 1 1/2 INCH MIN. NONFERROUS CAP WITH PROFESSIONAL LAND SURVEYOR NO. PERMANENTLY ATTACHED PRIOR TO PLACEMENT.
2. 5/8 INCH METALLIC SHAFT (SMOOTH SHAFTS TO BE DEFORMED).
3. PORTLAND CEMENT CONCRETE (P.C.C.) SHALL HAVE THE FOLLOWING CHARACTERISTICS: 4000 PSI MIN. COMPRESSIVE STRENGTH AT 28 DAYS, MIN. 6 SACKS OF CEMENT PER CUBIC YARD WITH A MAX. WATER/CEMENT RATIO OF 0.45, AIR ENTRAINMENT 6% ±1.5%, SLUMP AT 1 TO 4 INCHES. ALL MATERIALS SHALL CONFORM TO SSPWC SECTION 202.
4. PRE-PUNCHED CAPS ARE NOT PERMITTED.

NO.	REVISION	DATE	STANDARD DETAIL FOR PUBLIC WORKS CONSTRUCTION	SECTION CARSON CITY
			CLASS "A" SURVEY MONUMENT	DRAWING NO. C-5.5.3
APPROVED BY:		7/09		DATE 7/2009

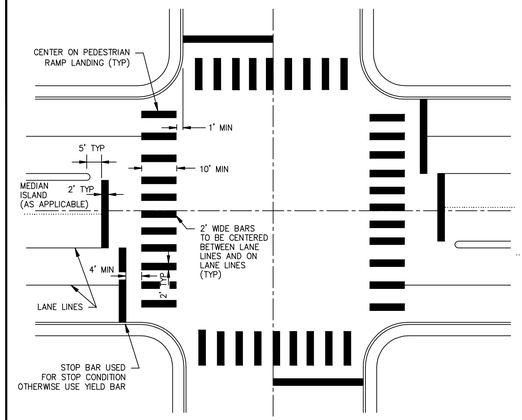

TYPICAL CROSSWALK STRIPING DETAIL

NOTES:

1. ALL STRIPING SHALL CONFORM TO THE MANUAL ON UNIFORM TRAFFIC CONTROL DEVICES (MUTCD) FOR STREETS AND HIGHWAYS, CURRENT EDITION.
2. INLAY TAPE STRIPING AND/OR PAVEMENT LEGENDS SHALL BE INSTALLED PER MANUFACTURERS RECOMMENDATIONS.
3. CROSSWALK MARKINGS SHALL BE INSTALLED AT ALL TRAFFIC SIGNAL LOCATIONS AND AT OTHER LOCATIONS AS DIRECTED BY THE CARSON CITY ENGINEER OR PUBLIC WORKS DIRECTOR.

NO.	REVISION	DATE	STANDARD DETAIL FOR PUBLIC WORKS CONSTRUCTION	SECTION CARSON CITY
			CROSSWALK LEGEND	DRAWING NO. C-5.4.3
APPROVED BY:		7/09		DATE 7/2009

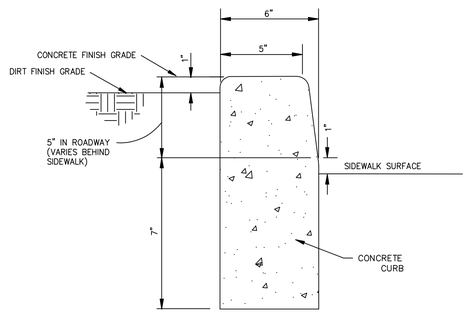

NOTES:

1. NO CONCRETE SHALL BE PLACED UNTIL FORMS AND SUBGRADE ARE INSPECTED BY CARSON CITY PUBLIC WORKS
2. ALL CONCRETE EDGING AND JOINTING SHALL BE CONSTRUCTED IN ACCORDANCE WITH STD. DETAIL 5.1.1 AND CONFORM TO SEC. 312.09 OF THE STANDARD SPECIFICATIONS FOR PUBLIC WORKS CONSTRUCTION (SSPWC).

NO.	REVISION	DATE	STANDARD DETAIL FOR PUBLIC WORKS CONSTRUCTION	SECTION CARSON CITY
			P.C.C. RETAINING CURB	DRAWING NO. C-5.3.10
APPROVED BY:		7/09		DATE 7/2009

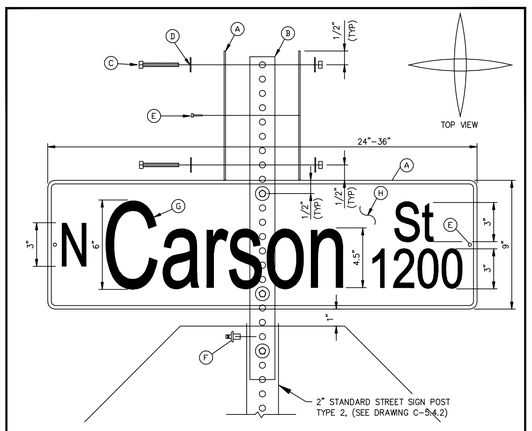

NOTES:

1. STREET NAME SIGN SHALL BE IN CONFORMANCE WITH THE LATEST EDITION OF THE M.U.T.C.D.
2. LETTERING FONT SHALL BE "HIGHWAY EM".
3. SUBMITTAL REQUIRED TO CITY FOR LONGER NAMES OR DROP LETTERS.
4. MATERIALS SHALL CONSIST OF:
   A. (4) FLAT PLATE ALUMINUM NO. 6061-T6, .080 GAUGE.
   B. (1) 2-FOOT LONG 1 3/4-INCH "TELESPAR" OR EQUIVALENT
   C. (4) 2 1/2-INCH LONG, 5/16-INCH SAE GRADE 5 BOLT & NUT
   D. (8) FLAT WASHERS
   E. (4) 1/8-INCH DIAMETER, STEEL POP RIVET (MEDIUM LENGTH) WITH 1/8-INCH WASHER (ALUMINUM OR STEEL)
   F. (1) 3/8-INCH DRIVE RIVET STEEL "SOUTHCO"
   G. WHITE SHEETING - RETROREFLECTIVE ASTM IX DIAMOND GRADE VIP "3M" OR EQUIVALENT
   H. GREEN SHEETING - TRANSPARENCY ELETRO CUT FILM 1177C "3M" OR EQUIVALENT

NO.	REVISION	DATE	STANDARD DETAIL FOR PUBLIC WORKS CONSTRUCTION	SECTION CARSON CITY
			STREET NAME SIGN AND MOUNTING	DRAWING NO. C-5.4.1
APPROVED BY:		7/09		DATE 7/2009

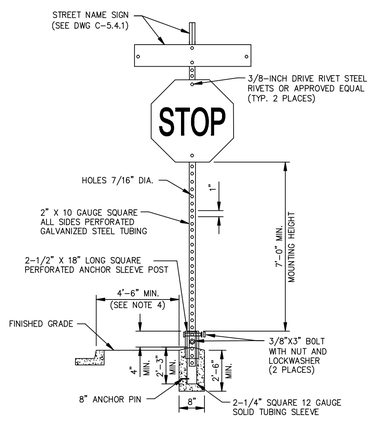

NOTES:

1. SIGN MATERIALS, CONSTRUCTION AND PLACEMENT SHALL BE IN CONFORMANCE WITH THE LATEST EDITION OF THE MANUAL ON UNIFORM TRAFFIC CONTROL DEVICES.
2. STREET NAME SIGN SHALL BE AS SPECIFIED IN STANDARD DETAIL DRAWING NO. C-5.4.1
3. ON STREETS WHERE CURBING DOES NOT EXIST, SET SIGN 6 FEET MINIMUM FROM PAVEMENT EDGE.
4. CONCRETE BASE SHALL BE LOCATED AT BACK OF SIDEWALK, UNLESS OTHERWISE DIRECTED BY THE CITY ENGINEER.
5. ALL REGULATORY SIGNS SHALL USE ASTM TYPE 3 OR 4 INTENSITY SHEETING.

NO.	REVISION	DATE	STANDARD DETAIL FOR PUBLIC WORKS CONSTRUCTION	SECTION CARSON CITY
			TRAFFIC SIGN INSTALLATION	DRAWING NO. C-5.4.2
APPROVED BY:		7/09		DATE 7/2009

1. MANHOLE MATERIALS AND CONSTRUCTION SHALL CONFORM TO THE REQUIREMENTS OF SECTION 204 "MANHOLES AND CATCH BASINS" OF THE SSPWC.
2. MARKING TAPE SHALL BE INSTALLED 12 INCHES ABOVE ALL STORM DRAIN PIPE. TAPE WIDTH SHALL BE 3 INCHES; THICKNESS SHALL BE FOUR (4) MIL OR GREATER AND SHALL BE GREEN AND BEAR LARGE PRINTING DENOTING "CAUTION BURIED STORM DRAIN LINE BELOW" OR EQUIVALENT WORDING.
3. PORTLAND CEMENT CONCRETE (P.C.C.) SHALL HAVE THE FOLLOWING CHARACTERISTICS: 4000 PSI MIN. COMPRESSIVE STRENGTH @ 28 DAYS, (CURB AND GUTTER TRANSITION ONLY, ALL UNEXPOSED CONCRETE MAY BE 3000 PSI) MIN. 6 SACKS OF CEMENT PER CUBIC YARD WITH A MAX. WATER/CEMENT RATIO OF 0.45, AIR ENTRAINMENT 6% ±1.5%, SLUMP AT 1 TO 4 INCHES. ALL MATERIALS SHALL CONFORM TO SSPWC SECTION 202.
4. REINFORCING STEEL SHALL BE GRADE 40 AND HAVE 1.5 INCHES MINIMUM CLEAR COVER.
5. EACH CATCH BASIN SHALL HAVE A 4 INCH ALUMINUM BLUE DISK WITH FISH IMAGE AND THE WORDS "NO DUMPING! DRAINS TO RIVER" (ALMETEK SD-4 OR APPROVED EQUAL) INSTALLED ON THE TOP OF THE CURB BOX.
6. FRAMES AND GRATES SHALL BE MATCHED TO ACHIEVE A CLOSE TOLERANCE FIT, WITH MINIMAL GAPS, AS APPROVED BY THE CARSON CITY ENGINEER OR PUBLIC WORKS DIRECTOR.
7. STORM DRAINAGE IMPROVEMENTS SHALL INCORPORATE WATER QUALITY AND EROSION CONTROLS IN ACCORDANCE WITH THE NEVADA "HANDBOOK OF BEST MANAGEMENT PRACTICES".
8. PRECAST MANHOLES SECTIONS, OTHER THAN GRADE RINGS, SHALL BE JOINED WITH FLEXIBLE PLASTIC GASKET MATERIAL SUCH AS RAM-NEK OR APPROVED EQUAL PER MANUFACTURERS RECOMMENDATIONS.
9. TRACER WIRE SHALL BE ATTACHED TO ANY STORM DRAIN LATERAL WHICH IS NOT PERPENDICULAR TO THE STORM DRAIN MAIN.
10. MANHOLES LOCATED OUTSIDE PAVED AREAS SHALL REQUIRE ALL WEATHER ACCESS ROADWAY CONSISTING OF 6 INCHES TYPE 2, CLASS B AGGREGATE BASE (CONFORMING TO THE SSPWC SECTION 200.01.02) AND STORM DRAIN MANHOLE MARKERS BE INSTALLED. STORM DRAIN MANHOLE MARKERS SHALL BE GREEN CARSONITE UTILITY MARKER (CUM 375), 5 FEET-2 INCHES (5'-2") WITH DECAL READING "STORM DRAIN MANHOLE". PLACE MARKERS ON EASEMENT LINE NEAREST TO MANHOLE OR AS DIRECTED BY THE CARSON CITY ENGINEER OR PUBLIC WORKS DIRECTOR.
11. MANHOLE CONCRETE COLLARS SHALL BE LEFT 2 1/2 INCHES TO 3 INCHES BELOW FINISHED ASPHALT SURFACE. APPLY AN APPROVED TACK COAT (CONFORMING TO THE SSPWC SECTION 316) AND FILL VOID BETWEEN ADJACENT PAVEMENT AND FRAME WITH TYPE 3 AC 20 PAVING (CONFORMING TO THE SSPWC SECTION 320). APPLY FOG SEAL (CONFORMING TO SSPWC SECTION 317) TO THE ASPHALT SURFACE. ALL CUTS IN PAVING SHALL BE STRAIGHT AND EVEN. EXCEPTION: WHEN STRUCTURE NOT LOCATED IN ASPHALT PAVEMENT OR LOCATED IN AN UNPAVED AREA, EXTEND CONCRETE TO FINISH GRADE.
12. GRATES SHALL BE PLACED OUTSIDE OF THE PEDESTRIAN TRAVELED WAY. GRATE OPENINGS SHALL NOT EXCEED 0.5 INCHES IN WIDTH OR 4 INCHES IN LENGTH. GRATES SHALL BE TRAFFIC RATED AND ADA COMPLIANT.

NO.	REVISION	DATE	STANDARD DETAIL FOR PUBLIC WORKS CONSTRUCTION	SECTION CARSON CITY
			STORM DRAIN GENERAL NOTES	DRAWING NO. C-4.1.1
APPROVED BY:		7/09		DATE 7/2009

PROJ. MGR.:	KLD/RCB
PROJ ASSOC.:	CJT
CHECKED BY:	RCB
DWG NO.:	CCCCN15
SCALE (HORIZ):	----
SCALE (VERT):	----
PLOT DATE:	JUNE 2011

CARSON CITY PUBLIC WORKS DEPARTMENT
3505 BUTTI WAY CARSON CITY, NEVADA 89701
PH: 887-2355 FAX: 887-2112

Manhard CONSULTING LTD
3476 Executive Pointe Way, Suite 12 Carson City, NV 89706
PH: (775) 882-5620 FH: (775)883-7282

PROFESSIONAL ENGINEER - STATE OF NEVADA
REBECCA C. BERNIER
Exp12/31/12
CIVIL
No. 19279

REV.	DATE	DESCRIPTION	BY	APP.

BID #1011-243

EAST-WEST WATER TRANSMISSION MAIN PH 1
PROJECT No: 2011-301
DETAIL SHEET

SHEET 31 OF 35

FOR BIDDING PURPOSES ONLY

June 16, 2011 - 12:50 Dwg Name: P:\Cccon15\dwg\Eng\Final Drawings\PLAN SET\DETAILS.dwg Updated By: cthomas

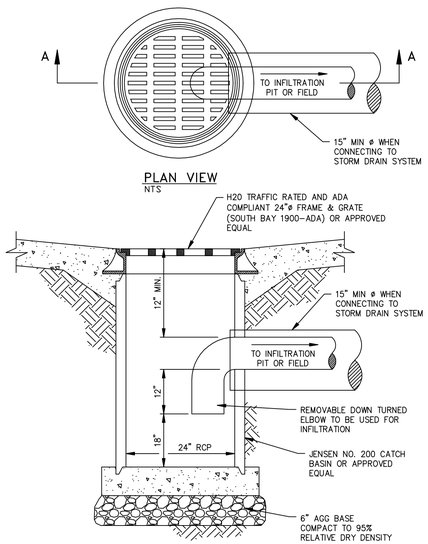

NO.	REVISION	DATE	STANDARD DETAIL FOR PUBLIC WORKS CONSTRUCTION	SECTION CARSON CITY
			CATCH BASIN TYPE 3	DRAWING NO. C-4.1.2
				DATE 7/2009
APPROVED BY:		7/09		

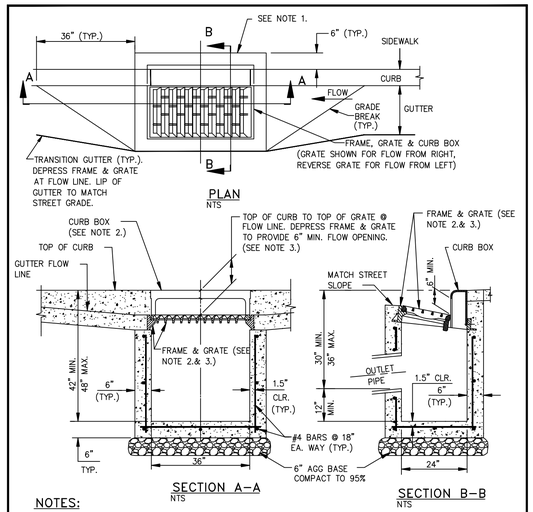

NOTES:

1. IF NO SIDEWALK IS PRESENT, POUR 6 INCH CONCRETE CURB STRUCTURE BEHIND GRATE AND TIE BEAM INTO BOX.
2. FRAME SHALL BE NEENAH R-3295 OR R-3067 SINGLE CURB UNIT WITH COMPLIANT TYPE L "VANE GRATE" AND CURB BOX, SOUTH BAY FOUNDRY VANE GRATE SOUTH BAY FOUNDRY 1947 OR APPROVED EQUAL, INSTALLED WITH PROPER FLOW DIRECTION.
3. TILT FRAME & GRATE AS REQUIRED TO ATTAIN 6 INCH MIN. FLOW OPENING & INSTALL DURABLE SHIMS BETWEEN THE CURB BOX & FRAME AS REQUIRED TO MATCH CURB BOX TO TOP OF CURB AND FACE OF CURB (SEE SECTION B-B).
4. CATCH BASIN TO BE INSTALLED OUTSIDE OF WALKING PATH. IF IT IS NOT POSSIBLE TO LOCATE CATCH BASIN OUTSIDE OF WALKING PATH THEN AN ADA COMPLIANT NEENAH MODEL DR/DL GRATE, SOUTH BAY FOUNDRY 1947-ADA OR APPROVED EQUAL SHALL BE USED UPON APPROVAL BY CARSON CITY ENGINEER OR PUBLIC WORKS DIRECTOR.

NO.	REVISION	DATE	STANDARD DETAIL FOR PUBLIC WORKS CONSTRUCTION	SECTION CARSON CITY
			CATCH BASIN TYPE 4-R	DRAWING NO. C-4.1.5
				DATE 7/2009
APPROVED BY:		7/09		

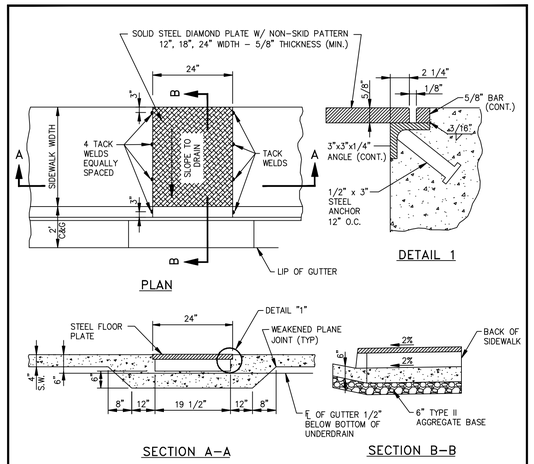

NOTES:

1. IF WIDTH OF PLATE IS GREATER THAN 24 INCHES, A SPECIAL DESIGN IS REQUIRED.
2. ALL EXPOSED METAL PARTS SHALL BE GALVANIZED AND ALL GALVANIZING DAMAGED BY FABRICATION OR INSTALLATION SHALL RECEIVE TWO COATS OF ALUMINUM PAINT (GALVONOX OR EQUAL).
3. SHARP EDGES SHALL BE GROUND OFF AND PAINTED.
4. FIBER-REINFORCED PORTLAND CEMENT CONCRETE (P.C.C.) SHALL HAVE THE FOLLOWING CHARACTERISTICS: 4000 PSI MIN. COMPRESSIVE STRENGTH @ 28 DAYS, MIN. 6 SACKS OF CEMENT PER CUBIC YARD WITH A MAX. WATER/CEMENT RATIO OF 0.45, AIR ENTRAINMENT 6% ±1.5%, SLUMP AT 1 TO 4 INCHES. ALL MATERIALS SHALL CONFORM TO SSPWC SECTION 202. POLYPROPYLENE FIBERS SHALL BE ADDED TO THE P.C.C. PER THE MANUFACTURER'S RECOMMENDATIONS.
5. BASE BENEATH CONCRETE DRAIN SUPPORT STRUCTURE SHALL BE 6 INCH MIN. TYPE 2, CLASS B AGGREGATE BASE, COMPACTED TO A MINIMUM 95% OF MAXIMUM DRY DENSITY.

NO.	REVISION	DATE	STANDARD DETAIL FOR PUBLIC WORKS CONSTRUCTION	SECTION CARSON CITY
			SIDEWALK CROSS-DRAIN	DRAWING NO. C-4.1.8
				DATE 7/2009
APPROVED BY:		7/09		

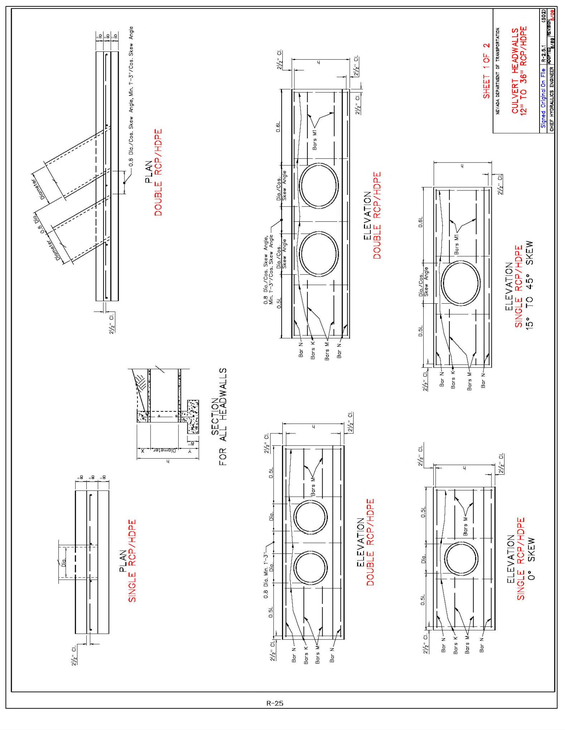

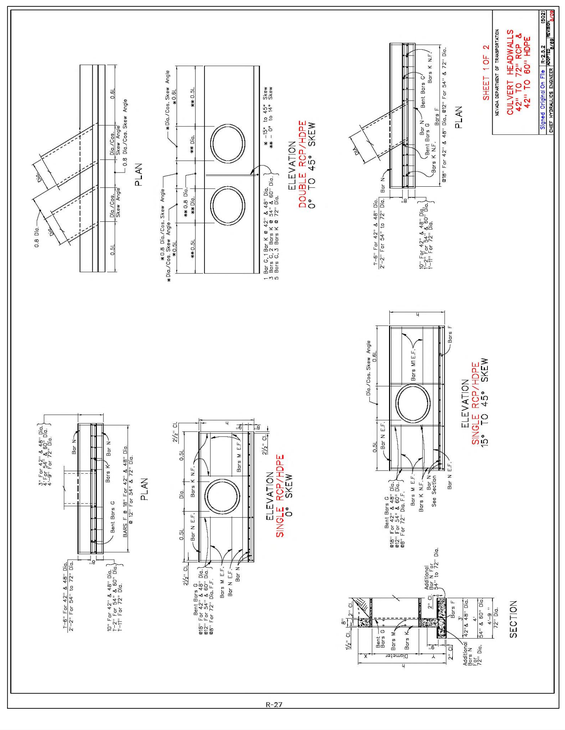

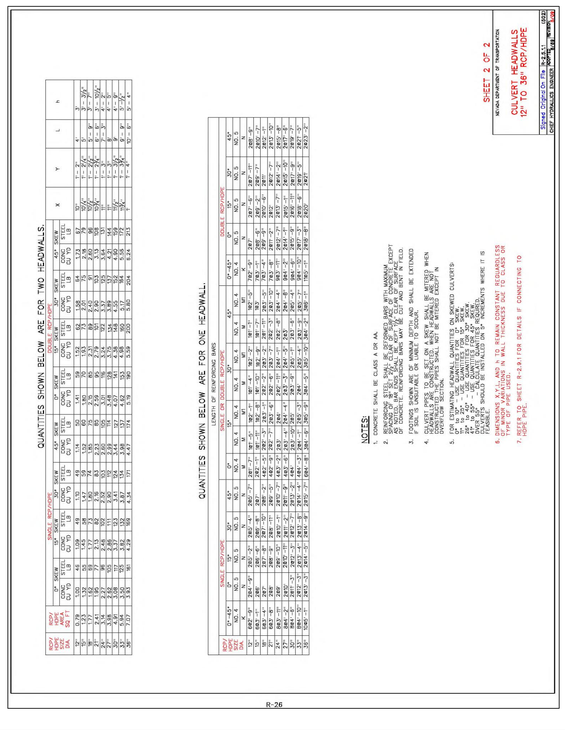

PROJ. MGR.:	KLD/RCB
PROJ ASSOC.:	CJT
CHECKED BY:	RCB
DWG NO.:	CCCCN15
SCALE (HORIZ):	----
SCALE (VERT):	----
PLOT DATE:	JUNE 2011

CARSON CITY
PUBLIC WORKS DEPARTMENT
3505 BUTTI WAY CARSON CITY, NEVADA 89701
PH: 887-2355 FAX: 887-2112

Manhard CONSULTING LTD
3476 Executive Pointe Way, Suite 12 Carson City, NV 89706
PH: (775) 882-5620 FX: (775)883-7282

PROFESSIONAL ENGINEER - STATE OF NEVADA
REBECCA C. BERNIER
Exp:12/31/12
CIVIL
No. 19279

REV.	DATE	DESCRIPTION	BY	APP.

EAST-WEST WATER TRANSMISSION MAIN PH 1
PROJECT No: 2011-301
DETAIL SHEET

SHEET 32 OF 35

FOR BIDDING PURPOSES ONLY

BID #1011-243

June 16, 2011 - 12:50 Dwg Name: P:\Cccon15\dwg\Eng\Final Drawings\PLAN SET\DETAILS.dwg Updated By: cthomas

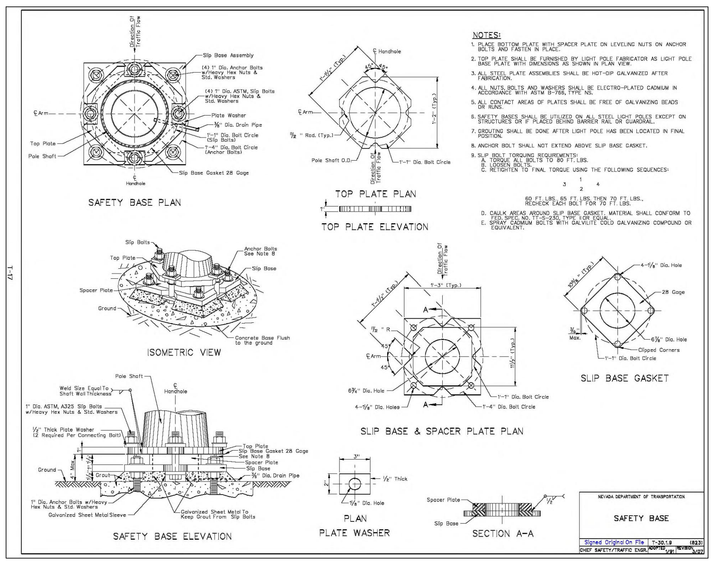

NOTES:

1. BOTTOM PLATE WITH SPACER PLATE ON LEVELING NUTS ON ANCHOR BOLTS AND FASTEN IN PLACE.
2. TOP PLATE SHALL SUBMERGED BY LIGHT POLE FABRICATOR AS LIGHT POLE BASE PLATE, WITH DIMENSIONS AS SHOWN IN PLAN VIEW.
3. ALL STEEL PLATE ASSEMBLIES SHALL BE HOT-DIP GALVANIZED AFTER FABRICATION.
4. ALL NUTS, BOLTS AND WASHERS SHALL BE ELECTRO-PLATED CADMIUM IN ACCORDANCE WITH ASTM B-766, TYPE NO.
5. ALL CONTACT AREAS OF PLATES SHALL BE FREE OF GALVANIZING BEADS OR BLISTERS.
6. SWITCH BASES SHALL BE UTILIZED ON ALL STEEL LIGHT POLES EXCEPT ON STRAIGHTLINE SIP'S, PLACE BEHIND BARRIER RAIL OR GUARDRAIL.
7. GROUTING SHALL BE DONE AFTER LIGHT POLE HAS BEEN LOCATED IN FINAL POSITION.
8. ANCHOR BOLT SHALL NOT EXTEND ABOVE SLIP BASE GASKET.
9. SLIP BOLT TORQUING REQUIREMENTS:
   A. TORQUE ALL BOLTS TO 80 FT.LBS.
   B. LOOSEN ALL BOLTS.
   C. RETIGHTEN TO FINAL TORQUE USING THE FOLLOWING SEQUENCES:
   1 3 2 4
   80 FT.LBS. (5 FT.LBS.THEN 70 FT.LBS.
   REPEAT EACH BOLT FOR 70 FT.LBS.
10. CAULK AREAS BETWEEN SLIP BASE GASKET, MATERIAL SHALL CONFORM TO TED SPEC NO.17-C-203, TYPE I OR EQUAL.
11. ELECTRICAL CONDUIT BOLTS WITH GOOD COLD GALVANIZING COMPOUND OR EQUIVALENT.

NEVADA DEPARTMENT OF TRANSPORTATION
SAFETY BASE
Signed Original On File 1-20.1.8 (R23)
CHIEF SAFETY/TRAFFIC ENGINEER
REVISED

R-2.7

QUANTITIES SHOWN BELOW ARE FOR TWO HEADWALLS.

RCP/ HDPE SIZE DIA.	RCP/ HDPE AREA SQ. FT.	SINGLE RCP/HDPE 0° SKEW CONC. YD³	STEEL LB.	15° SKEW CONC. YD³	STEEL LB.	30° SKEW CONC. YD³	STEEL LB.	45° SKEW CONC. YD³	STEEL LB.	DOUBLE RCP/HDPE 0° SKEW CONC. YD³	STEEL LB.	15° SKEW CONC. YD³	STEEL LB.	30° SKEW CONC. YD³	STEEL LB.	45° SKEW CONC. YD³	STEEL LB.	X	Y	L	h
24"	3.14	5.21	688	5.35	705	5.73	757	6.46	852	9.77	1289	10.03	1324	10.74	1418	12.11	1598	1' - 0¼"	2' - 0¼"	12"	6' - 6½"
36"	7.07	9.31	1228	9.55	1261	9.27	1221	8.48	1122	16.87	2225	17.12	2258	16.52	2179	15.33	2020	1' - 6"	2' - 6"	12" - 8"	7' - 0"
54"	15.90	14.8	990	12.71	1051	10.87	1095	11.21	1046	13.11	1236	14.22	1340	14.68	1385	15.84	1082	1' - 9½"	2' - 9½"	12" - 8"	7' - 6"
60"	18.84	11.29	1412	12.32	1244	12.50	1263	12.93	1308	13.08	1437	16.25	1537	16.88	1596	18.33	1724	1' - 4"	2' - 2"	12"	9' - 4"
72"	28.27	16.62	1825	17.05	2002	17.35	2043	17.83	2170	20.87	2247	22.23	2484	23.36	2596	25.26	2881	1' - 9"	2' - 9"	12" - 9"	8' - 6"

QUANTITIES SHOWN BELOW ARE FOR ONE HEADWALL:

RCP/ HDPE SIZE DIA.	LENGTH OF REINFORCING BARS SINGLE RCP/HDPE 0° SKEW NO. 5 Z	D	NO. 4 W	W1	N	K	15° SKEW NO. 5 Z	D	NO. 4 W	W1	N	K	30° SKEW NO. 5 Z	D	NO. 4 W	W1	N	K	45° SKEW NO. 5 Z	D	NO. 4 W	W1	N	K
42"	1262'-9"	1247'-6"	1261'-5"	941'-3"	1261'-9"	1247'-6"	842'-3"	1187'-6"	842'-3"	1187'-6"	842'-3"	1187'-6"	842'-1"	1187'-6"	842'-1"	1187'-6"	842'-1"	1187'-6"	1642'-9"	1297'-6"	1644'-11"	1286'-6"	1647'-11"	1286'-6"
48"	1362'-9"	1286'-1"	1286'-3"	1017'-9"	1286'-3"	1286'-1"	1482'-9"	1398'-11"	1486'-1"	1398'-11"	1487'-5"	1398'-11"	1487'-5"	1398'-11"	1486'-11"	1398'-11"	1486'-11"	1398'-11"	1762'-3"	1468'-1"	1763'-9"	1468'-1"	1763'-9"	1468'-1"
54"	2363'-9"	1693'-11"	1847'-7"	1369'-9"	2186'-10"	1693'-11"	2363'-9"	1693'-11"	2186'-10"	1693'-11"	2363'-9"	1693'-11"	2186'-10"	1693'-11"	2363'-9"	1693'-11"	2186'-10"	1693'-11"	2143'-9"	1993'-11"	2147'-7"	1993'-11"	2147'-7"	1993'-11"
60"	2363'-9"	1869'-8"	1087'-9"	1082'-9"	1447'-3"	2363'-9"	2069'-8"	887'-7"	1693'-4"	1043'-8"	1947'-11"	2363'-9"	2069'-8"	887'-5"	1693'-4"	1082'-4"	1947'-3"	2363'-9"	2793'-5"	2289'-8"	887'-3"	1693'-4"	1082'-5"	1947'-3"
72"	2364'-6"	2087'-7"	2083'-11"	1292'-8"	2084'-1"	2087'-7"	2364'-6"	2087'-7"	2364'-6"	2087'-7"	2364'-6"	2087'-7"	2364'-6"	2087'-7"	2364'-6"	2087'-7"	2364'-6"	2087'-7"	3364'-6"	2787'-7"	2368'-10"	2787'-7"	2368'-10"	2787'-7"
42"	1262'-9"	1187'-6"	1263'-5"	1927'-6"	1185'-8"	1187'-6"	1262'-9"	1187'-6"	683'-3"	646'-6"	842'-3"	1187'-6"	842'-1"	1187'-6"	683'-1"	646'-6"	842'-1"	1187'-6"	2262'-9"	1247'-6"	644'-11"	646'-6"	1644'-11"	1286'-6"
48"	1362'-9"	1398'-11"	1263'-3"	1927'-9"	1348'-3"	1398'-11"	1482'-9"	1398'-11"	683'-1"	687'-5"	1486'-11"	1398'-11"	683'-1"	687'-5"	1486'-11"	1398'-11"	683'-1"	687'-5"	2362'-3"	1468'-1"	683'-9"	687'-5"	1763'-9"	1468'-1"
54"	2363'-9"	1693'-11"	1847'-7"	1927'-7"	1693'-11"	1693'-11"	2363'-9"	1693'-11"	1847'-7"	1693'-11"	2363'-9"	1693'-11"	1847'-7"	1693'-11"	2363'-9"	1693'-11"	1847'-7"	1693'-11"	3143'-9"	1993'-11"	683'-9"	687'-5"	2147'-7"	1993'-11"
60"	2363'-9"	1869'-8"	1087'-9"	1082'-9"	1447'-3"	2363'-9"	2069'-8"	887'-7"	1693'-4"	1043'-8"	1947'-11"	2363'-9"	2069'-8"	887'-5"	1693'-4"	1082'-4"	1947'-3"	2363'-9"	3793'-5"	2289'-8"	887'-3"	1693'-4"	1082'-5"	1947'-3"
72"	2364'-6"	2087'-7"	2083'-11"	1292'-8"	2084'-1"	2087'-7"	2364'-6"	2087'-7"	2364'-6"	2087'-7"	2364'-6"	2087'-7"	2364'-6"	2087'-7"	2364'-6"	2087'-7"	2364'-6"	2087'-7"	3364'-6"	2787'-7"	2368'-10"	2787'-7"	2368'-10"	2787'-7"
42"	1262'-9"	1187'-6"	1263'-5"	1927'-6"	1185'-8"	1187'-6"	1262'-9"	1187'-6"	683'-3"	646'-6"	842'-3"	1187'-6"	842'-1"	1187'-6"	683'-1"	646'-6"	842'-1"	1187'-6"	2262'-9"	1247'-6"	644'-11"	646'-6"	1926'-10"	1245'-8"
48"	1362'-9"	1398'-11"	1263'-3"	1927'-9"	1348'-3"	1398'-11"	1482'-9"	1398'-11"	683'-1"	687'-5"	1926'-6"	1446'-2"	683'-1"	687'-5"	1926'-6"	1446'-2"	683'-1"	687'-5"	2362'-3"	1763'-11"	683'-9"	687'-5"	1930'-9"	1786'-2"
54"	2363'-9"	1693'-11"	1847'-7"	1927'-7"	1693'-11"	1693'-11"	2363'-9"	1693'-11"	1847'-7"	1693'-11"	1926'-10"	1693'-11"	1847'-7"	1693'-11"	1926'-10"	1693'-11"	1847'-7"	1693'-11"	3143'-9"	2147'-11"	683'-9"	687'-5"	1934'-11"	1926'-10"
60"	2363'-9"	2169'-8"	1087'-9"	1630'-9"	1447'-3"	2363'-9"	2169'-8"	887'-7"	1693'-4"	1630'-8"	1947'-11"	2363'-9"	2169'-8"	887'-5"	1693'-4"	1630'-8"	1947'-3"	2363'-9"	4063'-9"	2989'-8"	887'-3"	1693'-4"	1630'-8"	1947'-3"
72"	2364'-6"	2087'-7"	2083'-11"	1938'-10"	1948'-1"	2364'-6"	2087'-7"	1380'-2"	2087'-1"	1938'-9"	2364'-6"	2087'-7"	1380'-2"	2087'-1"	1938'-9"	2364'-6"	2087'-7"	1380'-2"	4484'-6"	4187'-7"	1380'-2"	2087'-1"	1938'-9"	2364'-6"

NOTES:

1. CONCRETE SHALL BE CLASS A OR AA.
2. REINFORCING STEEL SHALL BE DEFORMED BARS WITH MAXIMUM SPACING OF "W" SET 3½" CLEAR FROM FACE OF CONCRETE EXCEPT AS NOTED. BAR ENDS SHALL BE KEPT 7½" CLEAR OF SURFACE OF CONCRETE. REINFORCING BARS MAY BE CUT AND BENT IN FIELD.
3. FOOTINGS SHOWN ARE OF MINIMUM DEPTH AND SHALL BE EXTENDED IF SOIL IS UNSUITABLE OR UNSTABLE TO SCOUR.
4. CULVERT PIPES TO BE SET ON A SKEW SHALL BE MITERED WHEN HEADWALLS ARE CONSTRUCTED; WHEN HEADWALLS ARE NOT CONSTRUCTED THE PIPES SHALL NOT BE MITERED EXCEPT IN OVERFLOW SECTION.
5. FOR ESTIMATING HEADWALL QUANTITIES ON SKEWED CULVERTS:
   0° to 10° - USE QUANTITIES FOR 0° SKEW.
   20° to 30° - USE QUANTITIES FOR 30° SKEW.
   35° to 40° - USE QUANTITIES FOR 30° SKEW.
   41° to 55° - USE QUANTITIES FOR 45° SKEW.
   OVER 55° - CALCULATE QUANTITIES REQUIRED.
   CULVERTS SHOULD BE INSTALLED ON 5° INCREMENTS WHERE IT IS FEASIBLE.
6. DIMENSIONS X,Y,L, AND h TO REMAIN CONSTANT REGARDLESS OF MINOR VARIATIONS IN WALL THICKNESS DUE TO CLASS OR TYPE OF PIPE USED.
7. REFER TO SHEET R-2.8.1 FOR DETAILS IF CONNECTING TO HDPE PIPE.

SHEET 2 OF 2

NEVADA DEPARTMENT OF TRANSPORTATION
CULVERT HEADWALLS
42" TO 72" RCP & 42" TO 60" HDPE
Signed Original On File R-2.8.1 (R32)
CHIEF HYDRAULICS ENGINEER
REVISED

R-2.8

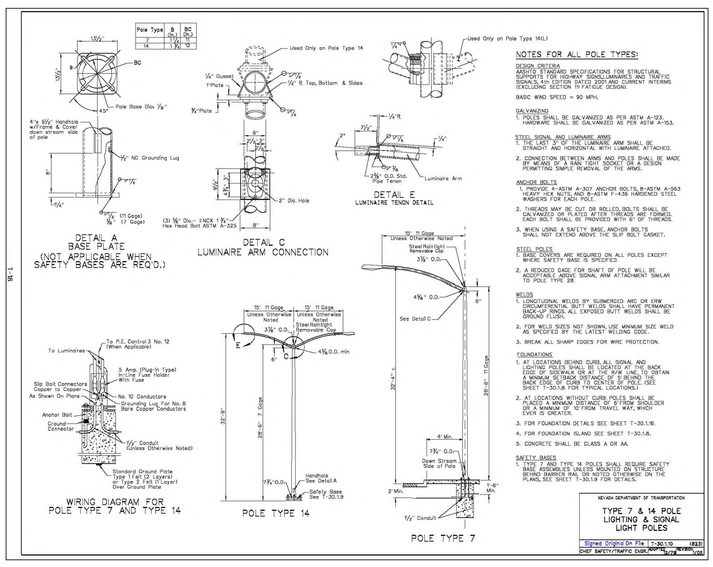

NOTES FOR ALL POLE TYPES:

DESIGN STANDARDS
1. AASHTO STANDARD SPECIFICATIONS FOR STRUCTURAL SUPPORTS FOR HIGHWAY SIGNS,LUMINAIRES AND TRAFFIC SIGNALS,4TH EDITION DATED 2001 AND CURRENT INTERIMS EXCLUDING SECTION 10 DESIGN.

BASIC WIND SPEED = 90 MPH.

GALVANIZING
1. POLES SHALL BE GALVANIZED AS PER ASTM A-123. HARDWARE SHALL BE GALVANIZED PER ASTM A-153.

STEEL SIGNAL AND LUMINAIRE ARMS
1. THE CREST (TOP) OF THE LUMINAIRE ARM SHALL BE STRAIGHT AND HORIZONTAL WITH LUMINAIRE ATTACHED.
2. CONNECTION OF SIGNAL ARM, LUMINAIRE ARM TO POLE SHALL BE A BAND ARM, BOLTED TO POLE IN MANNER TO ALLOW EASY REMOVAL OF THE ARMS.

ANCHOR BOLTS
1. PROVIDE 4-ASTM A-307 ANCHOR BOLTS, 8-ASTM A-563 HEAVY HEX NUTS, AND 8-ASTM F-436 HARDENED STEEL WASHERS FOR EACH POLE.
2. THREADS MAY BE CUT OR ROLLED.BOLTS SHALL BE GALVANIZED. SHALL BE ASTM A-36 OR A-307 FORGED. THREADS SHALL BE ROLLED AFTER HEAT-TREATING OF THREADS.
3. WHEN USING A SAFETY BASE,ANCHOR BOLTS SHALL NOT EXTEND ABOVE THE SLIP BOLT GASKET.

STEEL POLES
1. BASE COVERS ARE REQUIRED ON ALL POLES EXCEPT WHERE SAFETY BASE IS SPECIFIED.
2. A REDUCED SADE FOR SHAFT OF POLE WILL BE ACCEPTABLE,SIGNAL SIGNAL ARM ATTACHMENT SIMILAR TO POLE TYPE 28.

WELDS
1. LONGITUDINAL WELDS BY SUBMERGED ARC OR CRW EXCEPT SIGNAL ARM WELDS SHALL HAVE PERMANENT BACKING STRIP. ALL EXPOSED BUTT WELDS SHALL BE GROUND FLUSH.
2. FOR WELD SIZES NOT SHOWN USE MINIMUM SIZE WELD AS SPECIFIED BY THE LATEST WELDING CODE.
3. BREAK ALL SHARP EDGES FOR WIRE PROTECTION.

FOUNDATIONS
1. AT LOCATIONS BEHIND CURB,ALL SIGNAL AND LUMINAIRE POLES SHALL BE PLACED AT THE BACK EDGE OF SIDEWALK OR AT THE R/W LINE, TO OBTAIN A MINIMUM SETBACK DISTANCE OF 5'BEHIND THE CURB. SEE SHEET T-30.1.6 FOR TYPICAL LOCATIONS. SEE SHEET T-30.1.5 FOR TYPICAL LOCATIONS.
2. AT LOCATIONS WITHOUT CURB,POLES SHALL BE PLACED A MINIMUM DISTANCE OF 5'FROM SHOULDER OR A MINIMUM OF 10'FROM TRAVEL WAY, WHICH EVER IS GREATER.
3. FOR FOUNDATION DETAILS SEE SHEET T-30.1.6.
4. FOR FOUNDATION ISLAND SEE SHEET T-30.1.8.
5. CONCRETE SHALL BE CLASS A OR AA.

SAFETY BASES
1. TYPE 7 AND TYPE 14 POLES SHALL REQUIRE SAFETY BASE ASSEMBLIES UNLESS MOUNTED ON STRUCTURE BEHIND BARRIER RAIL OR GUARDRAIL AS SHOWN ON THE PLANS,SEE SHEET T-30.5.9 FOR DETAILS.

NEVADA DEPARTMENT OF TRANSPORTATION
TYPE 7 & 14 POLE LIGHTING & SIGNAL LIGHT POLES
Signed Original On File T-30.1.5 (R23)
CHIEF SAFETY/TRAFFIC ENGINEER
REVISED

T-1.8

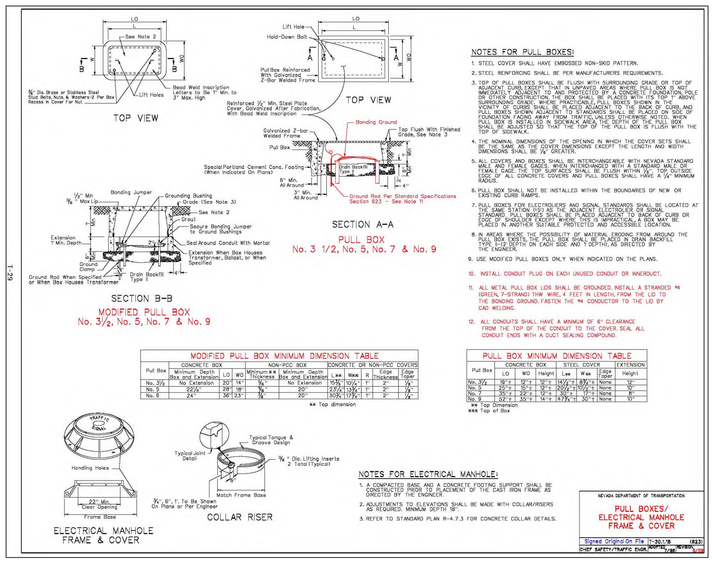

NOTES FOR PULL BOXES:

1. STEEL COVER SHALL HAVE EMBOSSED NON-SKID PATTERN.
2. STEEL REINFORCING SHALL BE PER MANUFACTURERS REQUIREMENTS.
3. TOP OF PULL BOXES SHALL BE FLUSH WITH GRADE ON TOP OF ADJACENT CURB,EXCEPT THAT IN UNPAVED AREAS WHERE PULL BOX IS NOT ADJACENT TO CURB, THE TOP OF PULL BOX SHALL BE FLUSH WITH GRADE OF STREET CONSTRUCTED OR 3" ABOVE FINISHED GRADE OF SURROUNDING GRADE, WHERE PRACTICABLE. PULL BOXES SHOWN IN CURB AREAS ARE TO BE PLACED IN THE SIDEWALK. THE TOP OF THE PULL BOX SHALL BE FLUSH WITH THE SIDEWALK. IN UNPAVED AREAS, PLACE PULL BOX ON FOUNDATION FACING AWAY FROM TRAFFIC UNLESS OTHERWISE NOTED. WHEN PULL BOX IS PLACED BEHIND CURB, THE TOP OF THE PULL BOX SHALL BE FLUSH WITH THE TOP OF THE CURB. IF THE TOP OF THE PULL BOX IS FLUSH WITH THE TOP OF SIDEWALK.
4. THE NOMINAL DIMENSIONS OF THE OPENING IN WHICH THE COVER SETS SHALL BE THE SAME AS THE COVER DIMENSIONS EXCEPT THE LENGTH AND WIDTH DIMENSIONS SHALL BE 1" OR GREATER.
5. ALL COVERS AND BOXES SHALL BE INTERCHANGEABLE WITH NEVADA STANDARD PULL BOXES OF THE SAME SIZE. COVERS SHALL BE SECURED TO THE BOX WITH STAINLESS STEEL CAP SCREWS. THE COVER SHALL BE FLUSH WITH THE SURROUNDING GRADE OF ALL CONCRETE COVERS AND PULL BOXES SHALL HAVE A ¼" MINIMUM SLOPE.
6. PULL BOXES SHALL BE INSTALLED WITHIN THE BOUNDARIES OF NEW OR EXISTING CURB AND GUTTER.
7. PULL BOXES FOR LIGHTING SYSTEMS SHALL SURROUNDED BE LOCATED AT THE SAME STATION AND AS THE ADJACENT LIGHTING POLE OR SIGNAL FOUNDATION. PULL BOXES SHALL BE PLACED AT THE BACK OF CURB OR SIDEWALK, WHICHEVER IS GREATER. PULL BOXES SHALL BE PLACED IN ANOTHER SUITABLE PROTECTED AND ACCESSIBLE LOCATION.
8. AN APRON OF 3/4" MINUS CRUSHED ROCK SHALL EXTEND FROM AROUND THE PULL BOX TWENTY (20) INCHES. PULL BOX SHALL BE PLACED IN DRAIN BASIN(S) WHERE ON CURB AND GUTTER AND DEPTH AS DIRECTED BY ENGINEER.
9. USE MODIFIED PULL BOXES ONLY WHEN INDICATED ON THE PLANS.
10. INSTALL CONDUIT PLUG ON EACH UNUSED CONDUIT OR INNERDUCT.
11. ALL METAL PULL BOX LIDS SHALL BE GROUNDED, INSTALL A STRANDED #4 GREEN, 7-STRAND TINN WIRE, 4 FEET IN LENGTH, FROM THE LID TO THE BONDING GROUND,FASTEN THE #4 CONDUCTOR TO THE LID BY CAD WELDING.
12. ALL CONDUITS SHALL HAVE A MINIMUM OF 6" CLEARANCE FROM THE TOP OF THE CONDUIT TO THE COVER SEAL ALL CONDUIT ENTRY WITH A DUCT SEALING COMPOUND.

MODIFIED PULL BOX MINIMUM DIMENSION TABLE

Pull Box	CONCRETE BOX Minimum Depth Box and Extension	LO	WO	NON-PCC BOX Minimum Thickness Box and Extension	LO	WO	CONCRETE OR NON-PCC COVERS Edge Thickness	Edge Type
No. 3½	24"	36"	24"	No. 10	30"	24"	1"	A
No. 5	24"	36"	24"	No. 10	30"	24"	1"	A
No. 7	24"	36"	24"	No. 10	30"	24"	1"	A

** Top dimension

PULL BOX MINIMUM DIMENSION TABLE

Pull Box	CONCRETE BOX LO	WO	Depth	STEEL COVER Lxw	Thick	EXTENSION Height
No. 3½	36"**	24"**	36"**	24"x 36"**	3/8"**	12"
No. 5	48"**	24"**	36"**	24"x 48"**	3/8"**	12"
No. 7	53"**	24"**	36"**	24"x 53"**	3/8"**	None
No. 9	63"**	24"**	36"**	24"x 63"**	3/8"**	None

** Top dimension
*** Top of Box

NOTES FOR ELECTRICAL MANHOLE:

1. A COMPACTED BASE AND A CONCRETE FOOTING SUPPORT SHALL BE PROVIDED FOR PLACEMENT OF THE CAST IRON FRAME AS DIRECTED BY THE ENGINEER.
2. ADJUSTMENTS TO ELEVATIONS SHALL BE MADE WITH COLLAR/RISERS AS REQUIRED. MINIMUM DEPTH 18".
3. REFER TO STANDARD PLAN R-4.7.3 FOR CONCRETE COLLAR DETAILS.

NEVADA DEPARTMENT OF TRANSPORTATION
PULL BOXES/ ELECTRICAL MANHOLE FRAME & COVER
Signed Original On File T-30.1.8 (R23)
CHIEF SAFETY/TRAFFIC ENGINEER
REVISED

T-2.5

LEGEND:
* WHERE INSUFFICIENT PUBLIC RIGHT-OF-WAY IS AVAILABLE TO LOCATE STREET FIXTURES OUTSIDE THE 5' NOMINAL SIDEWALK WIDTH, THE PEDESTRIAN ACCESS MAY BE REDUCED TO 4' FOR A LENGTH OF 2'.

NEVADA DEPARTMENT OF TRANSPORTATION
100 & 200 AMP UNDERGROUND ELECTRICAL SERVICE
Signed Original On File T-30.1.8 (R23)
CHIEF SAFETY/TRAFFIC ENGINEER
REVISED

T-3.4

EAST-WEST WATER TRANSMISSION MAIN PH 1 PROJECT No: 2011-301 DETAIL SHEET	REV.	DATE	DESCRIPTION	BY	APP.

SHEET 33 OF 35

PROFESSIONAL ENGINEER REBECCA C. BERNER No. 10279 STATE OF NEVADA Exp 12/31/12

CARSON CITY PUBLIC WORKS DEPARTMENT
3505 BUTTI WAY CARSON CITY, NEVADA 89701
PH: 887-2355 FAX: 887-2112

Manhard CONSULTING LTD
3476 Executive Pointe Way, Suite 12 Carson City, NV 89706
PH: (775) 882-5630 PH: (775)885-7282

PROJ. MGR.: KLD/RCB
PROJ ASSOC.: CJT
CHECKED BY: RCB
DWG NO.: CCCCN15
SCALE (HORIZ): ----
SCALE (VERT): ----
PLOT DATE: JUNE 2011

FOR BIDDING PURPOSES ONLY BID #1011-243

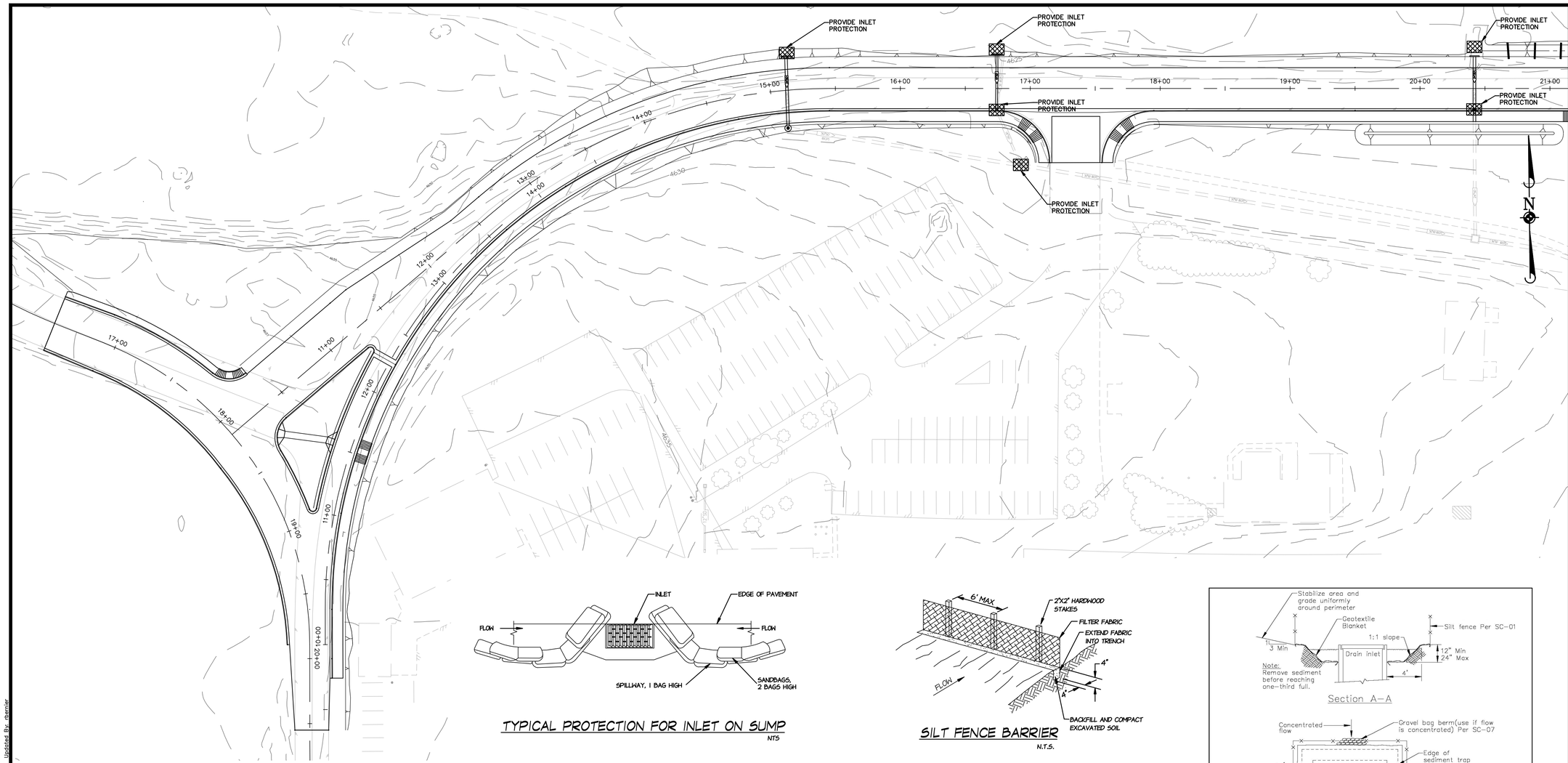

TYPICAL PROTECTION FOR INLET ON SUMP

NTS

SILT FENCE BARRIER

N.T.S.

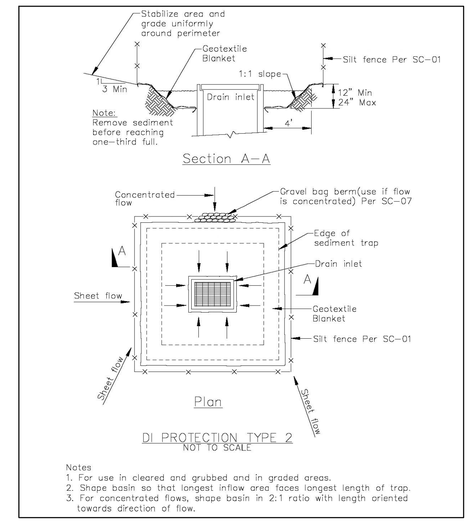

TYPICAL PROTECTION FOR DI

N.T.S.

GENERAL NOTES

1. CONTRACTOR IS RESPONSIBLE FOR OBTAINING A SWPPP PERMIT AND MEETING ALL OF IT'S CONDITIONS.

2. CONTRACTOR SHALL MONITOR ALL EROSION/SEDIMENT CONTROL FACILITIES ON A WEEKLY SCHEDULE AND DURING RAINFALL/SNOW MELT CONDITIONS. THIS MONITORING WILL ENSURE THAT FACILITIES ARE IN WORKING ORDER AND NO SEDIMENT IS TRANSPORTED OFF SITE.

3. ALL STRUCTURES WILL BE CONSTRUCTED TO CONFORM TO THE "CONSTRUCTION SITE BEST MANAGEMENT PRACTICES" FOR THE STATE OF NEVADA, REVISED 2006.

4. THE CONTRACTOR IS RESPONSIBLE FOR PREVENTING FUGITIVE DUST FROM LEAVING THE SITE BY MEANS OF EITHER WATER AND/OR A PERMANENT DUST PALLIATIVE.

5. THE CONTRACTOR SHALL USE BEST MANAGEMENT PRACTICES (BMP'S) THROUGHOUT THE PROJECT SITE DURING CONSTRUCTION AND PROVIDE PERMANENT EROSION CONTROL AS DEEMED NECESSARY BY THE CONSTRUCTION MANAGER.

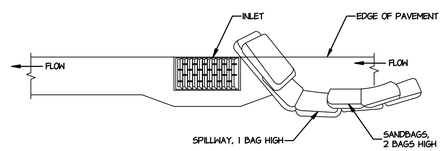

TYPICAL PROTECTION FOR INLET ON GRADE

NTS

NOTES:

1. INTENDED FOR TEMPORARY SHORT-TERM USE.
2. USE TO MANAGE CURB WATER FLOW.
3. SEDIMENT CAPTURED BEHIND SANDBAGS SHALL BE REMOVED WEEKLY DURING CONSTRUCTION.
4. INLET PROTECTION MUST BE PROPERLY MAINTAINED WHILE IN PLACE AND REMOVED WHEN REQUIREMENTS OF NDEP PERMIT HAVE BEEN MET.

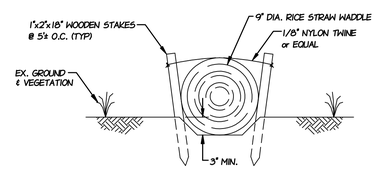

SEDIMENT LOG DETAIL

N.T.S.

NOTES:

1. 9" DIA MINIMUM, 12" DIA. PREFERRED.

GRAPHIC SCALE
40 20 40
(IN FEET)
1 INCH = 40 FEET

PROJ. MGR.:	KLD/RCB
PROJ ASSOC.:	CJT
CHECKED BY:	RCB
DWG NO.:	CCCCN15
SCALE (HORIZ):	1"=40'
SCALE (VERT):	----
PLOT DATE:	JUNE 2011

CARSON CITY
PUBLIC WORKS DEPARTMENT
3505 BUTTI WAY CARSON CITY, NEVADA 89701
PH: 887-2355 FAX: 887-2112

Manhard CONSULTING LTD
3476 Executive Pointe Way, Suite 12 Carson City, NV 89706
PH: (775) 882-5620 FH: (775)883-7282

PROFESSIONAL ENGINEER - STATE OF NEVADA
REBECCA C. BERNIER
Exp12/31/12
CIVIL
No. 19279

REV.	DATE	DESCRIPTION	BY	APP.

EAST-WEST WATER TRANSMISSION MAIN PH 1
PROJECT No: 2011-301
EROSION CONTROL PLAN

SHEET 34 OF 35

BID #1011-243

FOR BIDDING PURPOSES ONLY

June 16, 2011 - 11:16 Dwg Name: P:\Ccconf15\dwg\Eng\Final Drawings\PLAN SET\EROSION CONTROL PLAN.dwg Updated By: rbernier

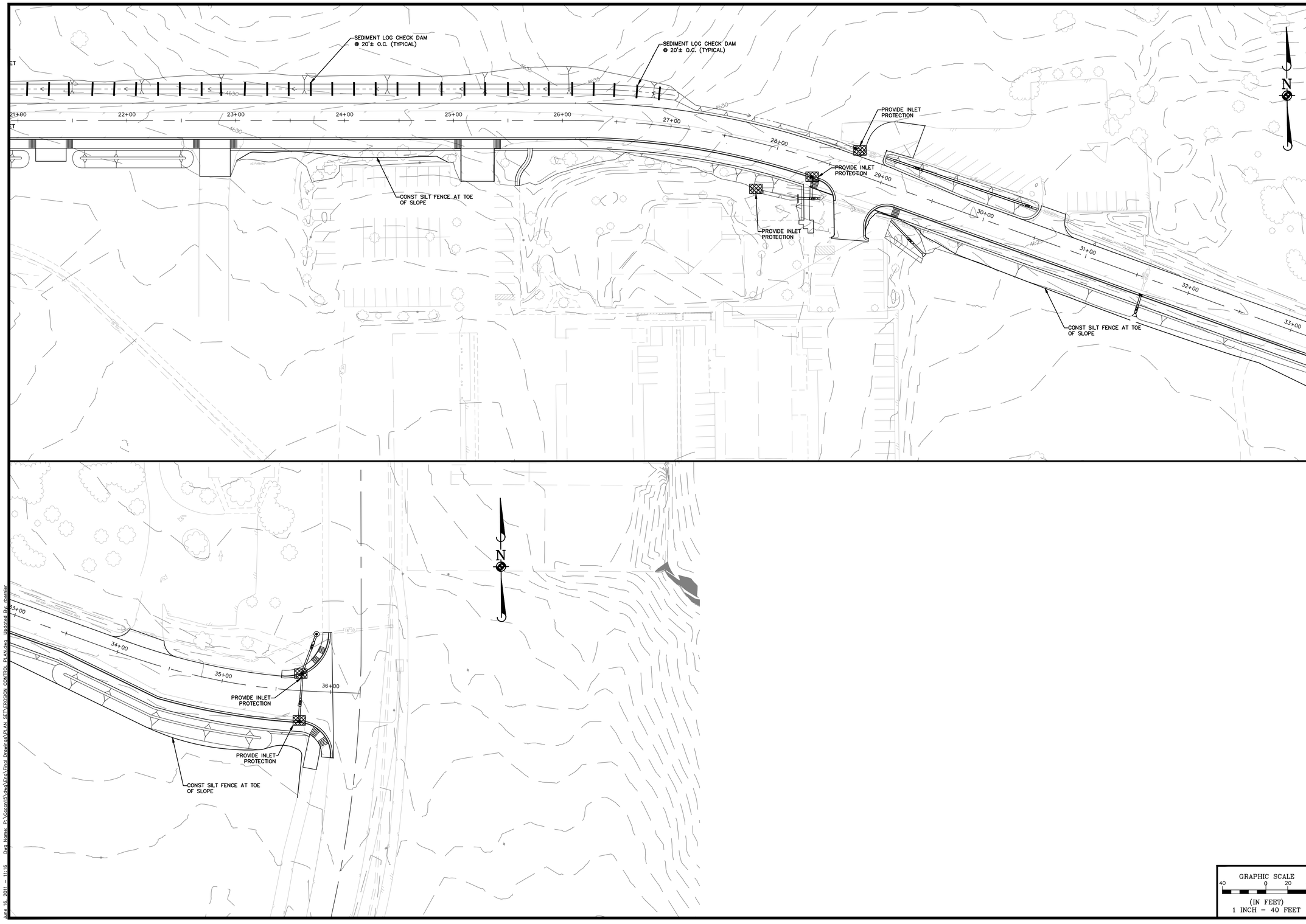

GRAPHIC SCALE
40 0 20 40
(IN FEET)
1 INCH = 40 FEET

PROJ. MGR.: KLD/RCB
PROJ ASSOC.: CJT
CHECKED BY: RCB
DWG NO.: CCCCN15
SCALE (HORIZ): 1"=40'
SCALE (VERT): ----
PLOT DATE: JUNE 2011

CARSON CITY
PUBLIC WORKS DEPARTMENT
3505 BUTTI WAY CARSON CITY, NEVADA 89701
PH: 887-2355 FAX: 887-2112

Manhard CONSULTING LTD
3478 Executive Pointe Way, Suite 12 Carson City, NV 89706
PH: (775) 882-5620 FH: (775)883-7282

PROFESSIONAL ENGINEER - STATE OF NEVADA
REBECCA C. BERNIER
Exp:12/31/12
CIVIL
No. 19279

REV.	DATE	DESCRIPTION	BY	APP.

EAST-WEST WATER TRANSMISSION MAIN PH 1
PROJECT No: 2011-301
EROSION CONTROL PLAN

SHEET 35 OF 35

FOR BIDDING PURPOSES ONLY

BID #1011-243

June 16, 2011 - 11:16 Dwg Name: P:\Cccccn15\dwg\Eng\Final Drawings\PLAN SET\EROSION CONTROL PLAN.dwg Updated By: rbernier