EAST - WEST WATER TRANSMISSION MAIN PHASE 1

CARSON CITY, NEVADA
CC PWP# CC-2011-301

BOARD OF SUPERVISORS

BOB CROWELL	MAYOR
SHELLY ALDEAN	SUPERVISOR
MOLLY WALT	SUPERVISOR
JOHN MCKENNA	SUPERVISOR
KAREN ABOWD	SUPERVISOR
ALAN GLOVER	CITY CLERK

OWNER:

CARSON CITY PUBLIC WORKS
3505 Butti Way
Carson City, NV 89701
Phone (775) 887-2355
Fax (775) 887-2164

ENGINEER

Manhard CONSULTING LTD
3476 Executive Pointe Way, Suite 12
Carson City, NV 89706
(775) 882-5630

APPROVALS

DARREN SCHULZ, P.E., DEPUTY PUBLIC WORKS DIRECTOR — DATE

JEFF SHARP, P.E. - CITY ENGINEER — DATE

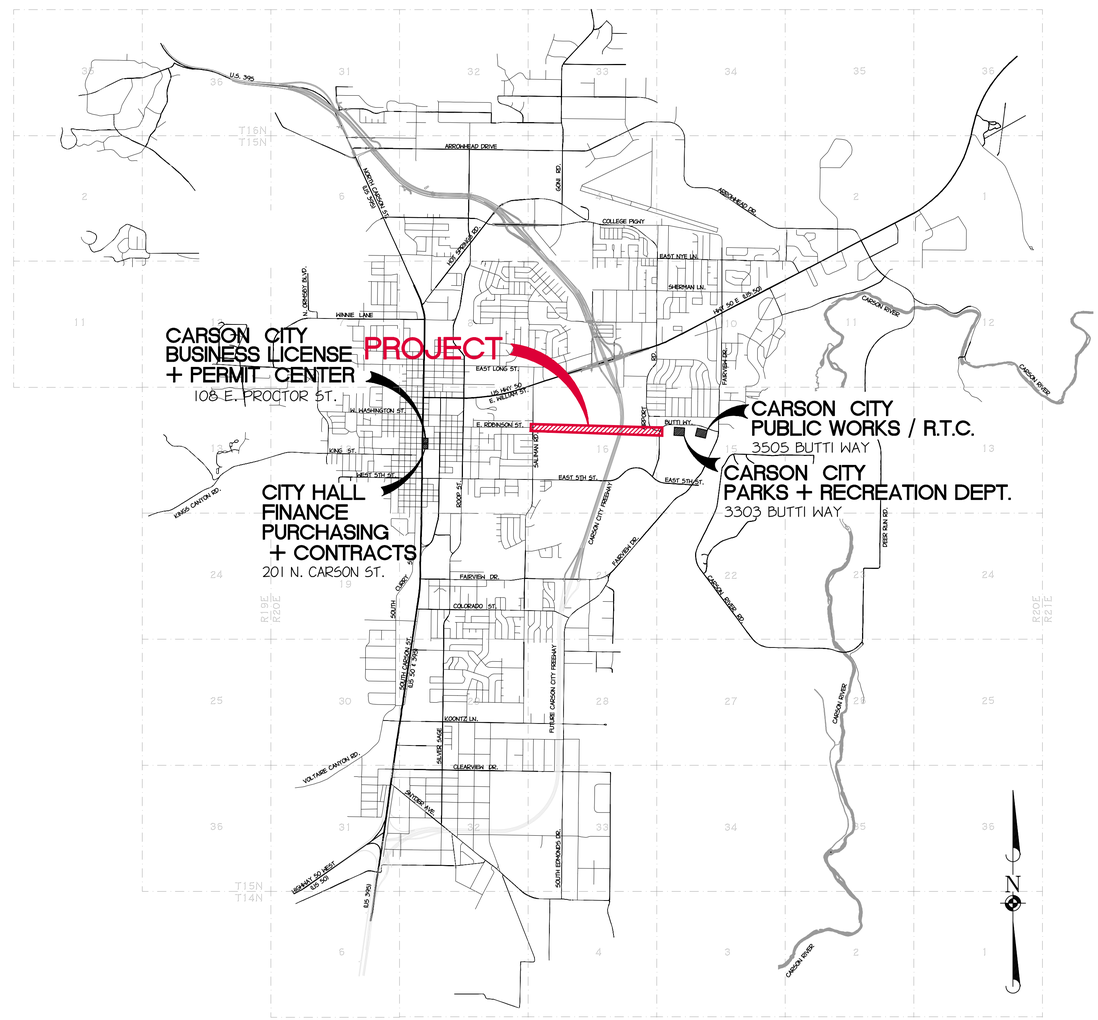

VICINITY MAP

SHEET INDEX

01	TITLE SHEET
02	NOTES & LEGEND
03-05	INDEX & CONTROL PLAN

WATER TRANSMISSION MAIN IMPROVEMENTS

06	WATERLINE PLAN & PROFILE - 10+00 TO 17+00
07	WATERLINE PLAN & PROFILE - 17+00 TO 28+00
08	WATERLINE PLAN & PROFILE - 28+00 TO 39+00
09	WATERLINE PLAN & PROFILE - 39+00 TO 50+00
10	WATERLINE PLAN & PROFILE - 50+00 TO 61+00
11	WATERLINE PLAN & PROFILE - 61+00 TO 65+00

ROADWAY IMPROVEMENTS

12	TYPICAL SECTIONS - AIRPORT ROAD
13	TYPICAL SECTIONS - BUTTI WAY
14	PLAN & PROFILE - AIRPORT ROAD 16+00 TO 21+00
15	PLAN & PROFILE - BUTTI WAY 9+00 TO 13+50
16	PLAN & PROFILE - BUTTI WAY 13+50 TO 16+50
17	PLAN & PROFILE - BUTTI WAY 16+50 TO 21+00
18	PLAN & PROFILE - BUTTI WAY 21+00 TO 25+50
19	PLAN & PROFILE - BUTTI WAY 25+50 TO 30+00
20	PLAN & PROFILE - BUTTI WAY 30+00 TO 34+50
21	PLAN & PROFILE - BUTTI WAY 34+50 TO 37+50
22	PLAN & PROFILE - BUTTI WAY RAMP

SIGNING & STRIPING

23-25	SIGNING & STRIPING PLAN

DETAIL SHEETS

26-33	DETAIL SHEET

EROSION CONTROL

34-35	EROSION CONTROL PLA

CCDES PERMIT APPLICATION NO. XX-XXX
NDOT PERMIT No. 114534-10
NDEP - SAFE DRINKING
WATER - APPROVED 06/15/11

CALL BEFORE YOU DIG
DIG ALERT
1-800-227-2600
OR 811
AVOID CUTTING UTILITY LINES
IT'S COSTLY

PROJ. MGR.: KLD/RCB
PROJ ASSOC.: CJT
CHECKED BY: RCB
DWG NO.: CCCCN15
SCALE (HORIZ): ----
SCALE (VERT): ----
PLOT DATE: JUNE 2011

CARSON CITY PUBLIC WORKS DEPARTMENT
3505 BUTTI WAY CARSON CITY, NEVADA 89701
PH: 887-2355 FAX: 887-2112

Manhard CONSULTING LTD
3476 Executive Pointe Way, Suite 12 Carson City, NV 89706
PH: (775) 882-5630 FX: (775)883-7282

PROFESSIONAL ENGINEER - STATE OF NEVADA
REBECCA C. BERNIER
Exp12/31/12
CIVIL
No. 19279

REV.	DATE	DESCRIPTION	BY	APP.

EAST-WEST WATER TRANSMISSION MAIN PH 1
PROJECT No: 2011-301
TITLE SHEET

SHEET 01 OF 35

FOR BIDDING PURPOSES ONLY

BID #1011-243

June 15, 2011 - 13:38 Dwg Name: P:\Ccccn15\dwg\Eng\Final Drawings\PLAN SET\C01.dwg Updated By: rbernier

LEGEND:

EXISTING	PROPOSED	
		CENTERLINE
		RIGHT-OF-WAY
		PROPERTY LINE
		PERMANENT EASEMENT
N/A		CONSTRUCTION LIMITS
		SANITARY SEWER LATERAL
8" SS (PVC)	8"SS	SANITARY SEWER (PLAN)
EX 8" PVC SS @ 0.0039	CONST 61 LF 8" SDR 35 PVC SS @ 0.0100 ft/ft	SANITARY SEWER (PROFILE)
15" SD (RCP)	15"SD	STORM DRAIN (PLAN)
EX 18" SD @ 0.0053 ft/ft	CONST 61 LF 18" RCP CL IV SD @ 0.0100 ft/ft	SANITARY SEWER (PROFILE)
8" W	10"WM	WATER MAIN (PLAN)
EX 8" PVC WM	CONST 61 LF 8" AWWA C-900 DR-18 PVC WM	WATER MAIN (PROFILE)
WM	WM WM WM	WATER METER
		GATE VALVE
		LINE LOCATION RISER
		FLUSH VALVE ASSY
	N/A	IRRIGATION LINE
IRR	N/A	IRRIGATION BOX
FH		FIRE HYDRANT ASSEMBLY
		CATCH BASIN
SSMH SDMH		SANITARY SEWER AND STORM DRAIN MANHOLES
	SEE SIGNING & STRIPING PLANS IF APPLICABLE	STREET SIGN
		LIGHT POLE
	SEE SIGNAL PLANS IF APPLICABLE	TRAFFIC SIGNAL POLE
	SEE SIGNAL PLANS IF APPLICABLE	TRAFFIC SIGNAL LINES
T	T	TELEPHONE LINE
OH	N/A	OVERHEAD WIRE
E	E	ELECTRIC
TV	C	CABLE TV LINE
FO	FO	FIBER OPTIC
G	N/A	GAS LINE
79.3	N/A	AERIAL SPOT ELEVATION

EXISTING	PROPOSED	
4682.23	N/A	SURVEY SPOT ELEVATION
	SEE PLAN & PROFILES	BORE HOLE / CORE LOCATION/ TEST PIT
CP-108	SEE INDEX SHEETS IF APPLICABLE	CONTROL POINT LOCATION
		WOOD FENCE
		CHAIN LINK FENCE
	N/A	DECORATIVE FENCE
		CONCRETE RETAINING OR BLOCK WALL
		FLOWLINE
N/A		GRADE BREAK
4900	N/A	CONTOUR INDEX
	N/A	CONTOUR INTR
	N/A	GUARD RAIL
		UNDERGROUND UTILITY MANHOLE
		UTILITY BOX
		UTILITY POLE
		GUY ANCHOR
		BOLLARD/POST
		DIRT/AGG BASE ROAD OR DRIVE
		EDGE OF PAVEMENT
		TOP OF SLOPE
N/A		SLOPE INDICATOR
		TOE OF SLOPE
		PEDESTRIAN RAMP
		DRIVEWAY CURB CUT
N/A		CONCRETE STAMPING
N/A		BRICK PAVERS
	SEE LANDSCAPING PLANS IF APPLICABLE	TREES
	SEE LANDSCAPING PLANS IF APPLICABLE	VEGETATION/ BUSHES
N/A		SPECIAL CONSTRUCTION REQUIRED

ABBREVIATIONS

AB	AGGREGATE BASE
ABAND	ABANDON
AC	ASPHALT CONCRETE
ACP	ARCH CONCRETE PIPE
ADJ	ADJUST
AGG	AGGREGATE
APPROX	APPROXIMATELY/ APPROXIMATE
ARV	AIR RELEASE VALVE
B-B	BACK TO BACK
B/P	BOTTOM OF PIPE
B/W	BACK OF WALK OR BOTTOM OF WALL
B.O.	BY OTHERS
BFC	BACK FACE CURB
BLDG	BUILDING
BOF	BOTTOM OF FOOTING
BM	BENCHMARK
BTWN	BETWEEN
C	CONDUIT
CC	CARSON CITY
C/G	CURB AND GUTTER
C/L	CENTERLINE
CB	CATCH BASIN
CATV	CABLE TELEVISION
CL	CLASS
CMP	CORRUGATED METAL PIPE
CNTRL	CONTROL
CONC	CONCRETE
CONST	CONSTRUCT
COORD	COORDINATE
CR	CURB RETURN
CY	CUBIC YARD
DEPT	DEPARTMENT
D	DITCH
DI	DROP INLET OR DUCTILE IRON
DIA	DIAMETER
DIP	DUCTILE IRON PIPE
DOM	DOMESTIC
DR	DRIVE
D/W	DRIVEWAY
E-E	EDGE TO EDGE
ELEC	ELECTRIC
ELL	ELBOW
ELEV	ELEVATION
EP	EDGE OF PAVEMENT
EQUIV	EQUIVALENT
ESMT	EASEMENT
EST	ESTIMATE
EX	EXISTING
FCA	FLANGED COUPLING ADAPTER
F-F	FACE TO FACE
FES	FLARED END SECTION
FFC	FRONT FACE OF CURB
FG	FINISH GRADE
FH	FIRE HYDRANT
FL	FLOW LINE
FLG	FLANGE
FM	FORCE MAIN
FT	FEET
G	GAS
G	GAS
GB	GRADE BREAK
GND	GROUND
GRD	GRADE
GTD	GRADE TO DRAIN
GV	GAS VALVE OR GATE VALVE
ICV	IRRIGATION CONTROL VALVE
GW	GUY WIRE
HDWL	HEADWALL
HORIZ	HORIZONTAL
HT	HEIGHT
IE	INVERT ELEVATION
IP	IRON PIPE
IRR	IRRIGATION
JNT	JOINT
LF	LINEAL FEET
LT	LEFT
MAX	MAXIMUM
MDD	MAXIMUM DRY DENSITY
MH	MANHOLE
MIN	MINIMUM
MON	MONUMENT
MTN	MOUNTAIN
NOM	NOMINAL
NDP	NO DIRECT PAYMENT
NTS	NOT TO SCALE
O/H	OVERHEAD
PC	POINT OF CURVATURE
PCC	POINT OF COMPOUND CURVATURE OR PORTLAND CEMENT CONCRETE
PE	POLYETHYLENE OR PLAIN END
PED	PEDESTRIAN
PLCS	PLACES
PO	PUSH ON
POC	POINT ON CURVE
POVC	POINT ON VERTICLE CURVE
PP	POWER POLE
PRC	POINT OF REVERSE CURVATURE
PT	POINT OF TANGENCY/POINT
PROP	PROPOSED
PRV	PRESSURE REDUCING VALVE
PRVC	POINT OF REVERSE VERTICAL CURVATURE
PVC	POLYVINYL CHLORIDE PIPE OR POINT OF VERTICAL CURVATURE
PVI	POINT OF VERTICAL INTERSECTION
PVT	POINT OF VERTICAL TANGENCY
PVMT	PAVEMENT
R	RADIUS
RCP	REINFORCED CONCRETE PIPE
RCPE	REINFORCED CONCRETE PIPE ELLIPTICAL
RCW	RECLAIMED WATER
REM	REMOVE
RESTD	RESTRAINED
RQD	REQUIRED
R&R	REMOVE AND REPLACE
RT	RIGHT
R/W	RIGHT OF WAY
S	SLOPE
SD	STORM DRAIN
SDDI	STORM DRAIN DROP INLET
SF	SQUARE FOOT
SDMH	STORM DRAIN MANHOLE
SS	SANITARY SEWER
SSCO	SANITARY SEWER CLEAN OUT
SSMH	SANITARY SEWER MANHOLE
ST	STREET
STA	STATION
STD	STANDARD
STL	STEEL
S/W	SIDEWALK
T	TRANSFORMER
TB	THRUST BLOCK
TC	TOP OF CURB
TELE	TELEPHONE
TEMP	TEMPORARY
T/F	TOP OF FOUNDATION
T/P	TOP OF PIPE
T/W	TOP OF WALL
TYP	TYPICAL
U/G	UNDER GROUND
U.N.O	UNLESS NOTED OTHERWISE
VG	VALLEY GUTTER
W	WATER
W/	WITH
W/L	WATER LINE
WM	WATER METER OR WATER MAIN
WV	WATER VALVE
WWF	WELDED WIRE FABRIC

GENERAL NOTES

1. ALL WORK SHALL CONFORM TO THE "AMERICAN WATER WORKS ASSOCIATION (AWWA) STANDARDS", "STANDARD SPECIFICATIONS FOR PUBLIC WORKS CONSTRUCTION" (SSPWC) AND THE "STANDARD DETAILS FOR PUBLIC WORKS CONSTRUCTION" (SDPWC) AS ADOPTED BY CARSON CITY. THE CONTRACTOR SHALL OBTAIN A PERMIT FOR PUBLIC WORKS CONSTRUCTION FROM THE CARSON CITY PERMIT CENTER PRIOR TO THE START OF CONSTRUCTION.
2. ALL TRAFFIC CONTROL AND BARRICADING WITHIN THE CARSON CITY RIGHT-OF-WAY SHALL CONFORM TO SECTION 100.33, 332.04 AND 332.05 OF THE STANDARD SPECIFICATIONS, PART VI OF THE MANUAL ON UNIFORM TRAFFIC CONTROL DEVICES, LATEST EDITION, AND THE UNR T2 CENTER, TEMPORARY TRAFFIC CONTROL GUIDELINES LATEST EDITION. A TRAFFIC CONTROL PLAN MUST BE SUBMITTED AND APPROVED BY THE CARSON CITY ENGINEERING DIVISION PRIOR TO ANY STREET CLOSURES.
3. THE CONTRACTOR SHALL CALL UNDERGROUND SERVICE ALERT "CALL BEFORE YOU DIG" (811) OR (1-800-227-2600) AT LEAST TWO (2) WORKING DAYS PRIOR TO START OF CONSTRUCTION AND COMPLY WITH THE REQUIREMENTS OF NRS AND NAC 455 THROUGHOUT THE COURSE OF THE WORK. SEWER SERVICE LATERALS ARE NOT OWNED OR MARKED BY CARSON CITY.
4. THE CONTRACTOR SHALL CALL THE CARSON CITY ENGINEERING DIVISION (887-2300) TWO (2) WORKING DAYS PRIOR TO THE START OF CONSTRUCTION. THE CONTRACTOR SHALL CALL ONE (1) WORKING DAY PRIOR TO REQUIRED INSPECTIONS AND TESTING. THE REQUIRED INSPECTIONS AND TESTING ARE LISTED ON THE INSPECTION RECORD ISSUED WITH EACH PERMIT. THE CONTRACTOR MUST HAVE THE PERMIT NUMBER AND THE DESCRIPTION LISTED ON THE INSPECTION RECORD TO SCHEDULE REQUIRED INSPECTIONS AND TESTING. FOR CITY CONTRACTED PROJECTS, THE CONTRACTOR SHALL SCHEDULE INSPECTIONS PER THE CONTRACT DOCUMENTS.
5. FINAL INSPECTIONS WILL BE PERFORMED BY CARSON CITY ENGINEERING DIVISION AND OPERATIONS ACCORDING TO THE CARSON CITY INSPECTIONS AND TESTING PROCEDURES. NOTE: THESE PROCEDURES REQUIRE SUBMITTAL OF RECORD DRAWING PRINTS BY THE CONTRACTOR AND 10 WORKING DAYS TO PREPARE A FINAL PUNCH LIST. ALL CONDITIONS OF THE FINAL INSPECTION MUST BE COMPLETED PRIOR TO FINAL ACCEPTANCE OR ANY APPROVAL OF A CERTIFICATE OF OCCUPANCY BY THE CARSON CITY ENGINEERING DIVISION.
6. MODIFICATIONS TO THE APPROVED PLANS REQUIRES REVIEW AND APPROVAL BY THE CARSON CITY ENGINEERING DIVISION. WORK PERFORMED WITHOUT WRITTEN APPROVAL BY CARSON CITY ENGINEERING WILL REQUIRE REMOVAL AT THE CONTRACTORS EXPENSE.
7. THE APPROVED PLAN, PERMIT AND INSPECTION RECORD MUST BE ON THE JOB SITE AT ALL TIMES.
8. PLAN APPROVAL FOR SEWER AND WATER CONSTRUCTION SHALL EXPIRE ONE YEAR FROM DATE OF APPROVAL UNLESS CONSTRUCTION HAS BEEN INITIATED. (CCMC 12.06.180F, 12.01.140D)
9. THE CONTRACTOR WILL BE SOLELY AND COMPLETELY RESPONSIBLE FOR ACQUIRING A STORMWATER DISCHARGE PERMIT FROM THE NEVADA DIVISION OF ENVIRONMENTAL PROTECTION (NDEP) INCLUDING DEVELOPING, SUBMITTING AND IMPLEMENTING A STORM WATER POLLUTION PREVENTION PLAN (SWPPP). THE CONTRACTOR SHALL DEVELOP, PLACE AND MAINTAIN STORM WATER PROTECTION DEVICES IN COMPLIANCE WITH THE NEVADA CONTRACTORS FIELD GUIDE FOR CONSTRUCTION SITE BEST MANAGEMENT PRACTICES (JUNE 2008).
10. THE LOCATION OF EXISTING UTILITIES (INCLUDING EXISTING SEWER LATERALS AND BUILDING SEWERS) SHOWN ON THESE DRAWINGS IS BASED ON THE BEST INFORMATION AVAILABLE TO THE ENGINEER. PRIOR TO BEGINNING CONSTRUCTION IT SHALL BE THE CONTRACTORS RESPONSIBILITY TO VERIFY THESE LOCATIONS AT THE PROPOSED POINTS OF CONNECTIONS AND IN AREAS OF POSSIBLE CONFLICT WITH NEW UTILITY INSTALLATION, POTHOLING IS REQUIRED (SEE NOTE 25). SHOULD THE CONTRACTOR FIND ANY DISCREPANCIES BETWEEN THE CONDITIONS EXISTING IN THE FIELD AND THE INFORMATION SHOWN ON THESE DRAWINGS, HE SHALL NOTIFY THE CONSTRUCTION MANAGER BEFORE PROCEEDING WITH CONSTRUCTION.
11. THE CONTRACTOR SHALL BE SOLELY AND COMPLETELY RESPONSIBLE FOR THE CONDITIONS OF THE JOB SITE, INCLUDING SAFETY OF ALL PERSONS AND PROPERTY DURING PERFORMANCE OF THE WORK. THIS REQUIREMENT WILL APPLY CONTINUOUSLY AND NOT BE LIMITED TO NORMAL WORKING HOURS. THE CONTRACTOR SHALL BE RESPONSIBLE FOR THE DESIGN AND CONSTRUCTION OF PROPER SHORING OF TRENCHES IN ACCORDANCE WITH OCCUPATIONAL SAFETY LAWS. THE DUTIES OF THE ENGINEER OR CONSTRUCTION MANAGER DO NOT INCLUDE REVIEW OF THE ADEQUACY OF THE CONTRACTOR'S SAFETY IN, ON, OR NEAR THE CONSTRUCTION SITE.
12. SHOULD IT APPEAR THAT THE WORK TO BE DONE, OR ANY MATTER RELATIVE THERETO, IS NOT SUFFICIENTLY DETAILED OR EXPLAINED ON THESE PLANS, THE CONTRACTOR SHALL CONTACT THE CONSTRUCTION MANAGER FOR SUCH FURTHER EXPLANATIONS AS MAY BE NECESSARY.
13. THE CONTRACTOR WILL BE RESPONSIBLE FOR THE REPLACEMENT OF ALL EXISTING IMPROVEMENTS DAMAGED OR DISTURBED BY THIS CONSTRUCTION PROJECT, INCLUDING: PCC CURB, GUTTER & SIDEWALK, PCC DRIVEWAY APRONS, THE ADJUSTMENT TO GRADE OF ALL MANHOLES AND VALVE BOXES AND PRIVATE IMPROVEMENTS OUTSIDE THE PAVED ROADWAY NOT SHOWN FOR REMOVAL OR MODIFICATION ON THESE DRAWINGS (NDP FOR REPAIRS UNLESS NOTED OTHERWISE ON DRAWINGS)
14. NO WORK SHALL TAKE PLACE IN THE NDOT RIGHT-OF-WAY UNTIL THE RIGHT-OF-WAY OCCUPANCY PERMIT HAS BEEN ISSUED. ALL WORK WITHIN THE NDOT RIGHT-OF-WAY MUST COMPLY WITH THE PROVISIONS OF THE NDOT ENCROACHMENT PERMIT, AND SHALL CONFORM TO THE "STANDARD SPECIFICATIONS FOR ROAD AND BRIDGE CONSTRUCTION", 2010 EDITION AND THE "STANDARD PLANS FOR ROAD AND BRIDGE CONSTRUCTION", 2007 EDITION AS PUBLISHED BY THE NEVADA DEPARTMENT OF TRANSPORTATION (NDOT).
15. SEE INDEX & CONTROL PLAN FOR HORIZONTAL & VERTICAL CONTROL INFORMATION.
16. DATE OF AERIAL PHOTOGRAPHY, 2010, DATE OF TOPOGRAPHIC MAPPING, JULY 2010.
17. ALL DIMENSIONS, OFFSETS AND RADII ARE TO FRONT FACE OF CURB UNLESS OTHERWISE NOTED.
18. ALL EARTHWORK AND PAVING WORK SHALL CONFORM TO THE REQUIREMENTS CONTAINED IN THE GEOTECHNICAL INVESTIGATION TITLED "ROBINSON TRANSMISSION MAIN PROJECT CARSON CITY, NEVADA" OCTOBER 2010 AS PREPARED BY GEOCON CONSULTANTS, INC. CONTRACTOR SHALL MAINTAIN A COPY OF THIS DOCUMENT ON THE PROJECT SITE THROUGHOUT CONSTRUCTION.
19. CONTRACTOR SHALL PROVIDE PERMANENT PAVEMENT PATCH FOR ALL UNDERGROUND UTILITY INSTALLATIONS AT ALL LOCATIONS OUTSIDE OF PAVEMENT RECONSTRUCTION OR WIDENING AREAS AS SHOWN ON DRAWINGS. CONTRACTOR SHALL PROVIDE TEMPORARY PAVEMENT PATCH IN PAVEMENT RECONSTRUCTION AREAS UNLESS OTHERWISE DIRECTED BY CONSTRUCTION MANAGER.
20. CONTRACTOR SHALL POTHOLE ALL EXISTING UNDERGROUND FACILITIES IN POTENTIAL CONFLICT WITH NEW UTILITIES PRIOR TO CONSTRUCTION UNLESS OTHERWISE ARRANGED WITH CONSTRUCTION MANAGER AND UTILITY COMPANY. COORDINATE POTHOLING AND RELOCATION'S WITH CONSTRUCTION MANAGER AND APPROPRIATE UTILITY COMPANIES OR CARSON CITY DEPARTMENT. (NDP FOR POTHOLING)
21. UTILITY CONTACTS:

UTILITY	UTILITY PROVIDER	CONTACT
WATER	CARSON CITY PUBLIC WORKS OPERATIONS	CITY'S DESIGNATED INSPECTOR*
SANITARY SEWER, AND RECLAIMED WATER	CARSON CITY PUBLIC WORKS OPERATIONS	CITY'S DESIGNATED INSPECTOR*
STORM DRAIN AND TRAFFIC FACILITIES	CARSON CITY STREETS DEPARTMENT	CITY'S DESIGNATED INSPECTOR*
ELECTRICAL POWER	NV ENERGY	CHUCK ADAMS (775) 834-2901
TELEPHONE	AT&T	TOM CUNNING (775) 448-9250
NATURAL GAS	SOUTHWEST GAS	LARRY GIBSON (775) 887-2863
CABLE TELEVISION	CHARTER COMMUNICATIONS	JARED BEISNER (775) 221-4102

*FOR AFTER HOURS EMERGENCIES REGARDING WATER OR SEWER CALL SHERIFFS OFFICE DISPATCH (775) 887-2008.

PROJ. MGR.: KLD/RCB
PROJ ASSOC.: CJT
CHECKED BY: RCB
DWG NO.: CCCCN15
SCALE (HORIZ): ----
SCALE (VERT): ----
PLOT DATE: JUNE 2011

CARSON CITY PUBLIC WORKS DEPARTMENT
3505 BUTTI WAY CARSON CITY, NEVADA 89701
PH: 887-2355 FAX: 887-2112

Manhard CONSULTING LTD
3476 Executive Pointe Way, Suite 12 Carson City, NV 89706
PH: (775) 882-5630 PH: (775)885-7282

PROFESSIONAL ENGINEER - STATE OF NEVADA
REBECCA C. BERNIER
Exp:12/31/12
CIVIL
No. 19279

REV.	DATE	DESCRIPTION	BY	APP.

EAST-WEST WATER TRANSMISSION MAIN PH 1
PROJECT No: 2011-301
NOTES & LEGEND

SHEET 02 OF 35

BID #1011-243

FOR BIDDING PURPOSES ONLY

June 3, 2011 - 10:47 Dwg Name: P:\Ccccn15\dwg\Eng\Final Drawings\PLAN SET\CS2.dwg Updated By: cthomas

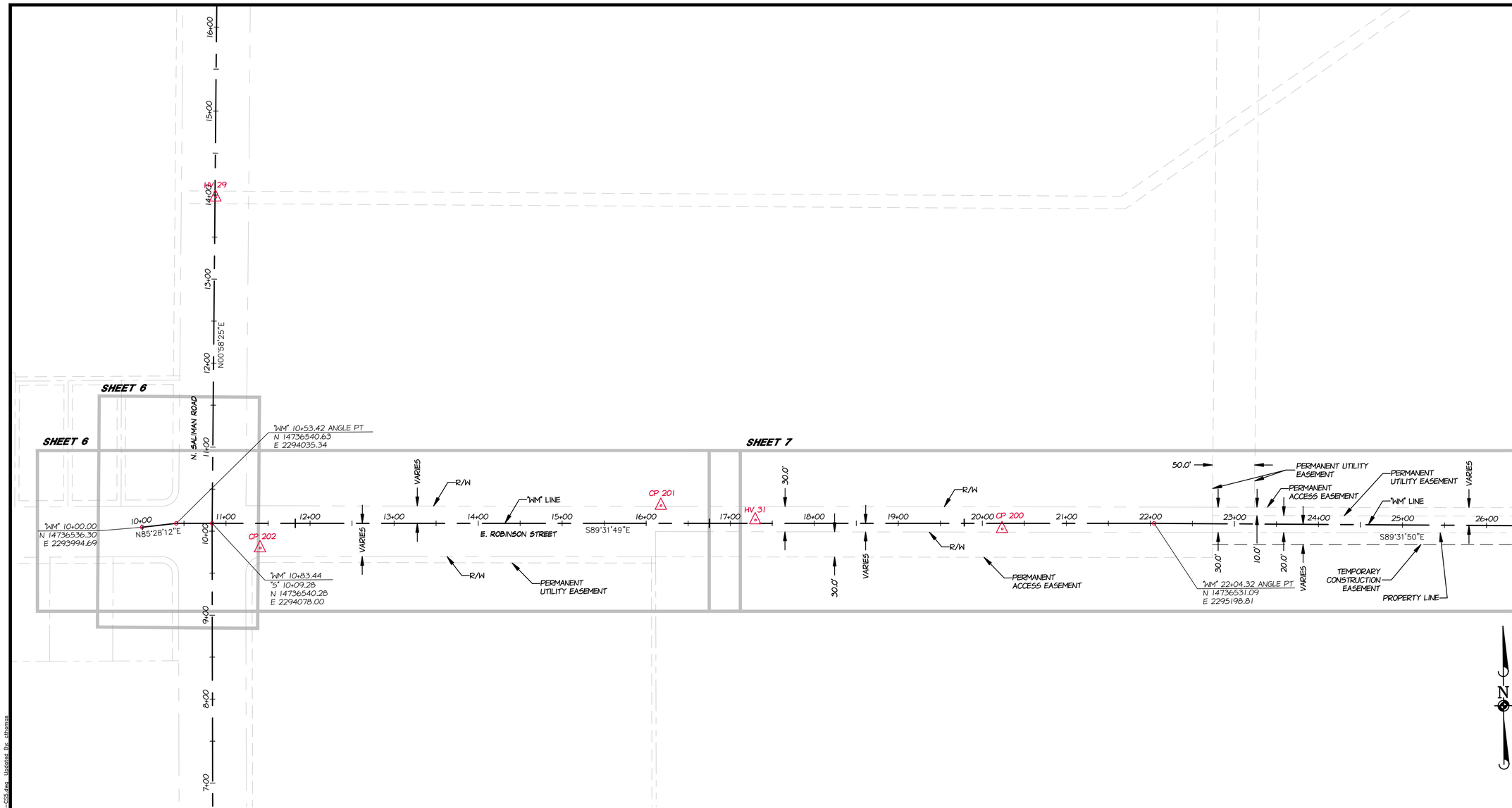

LEGEND

- PROPOSED CLASS "A" MONUMENT
- EXISTING CLASS "A" MONUMENT
- CALCULATED POINT (NO MONUMENT)
- CONTROL POINT DATA (SEE TABLE)
- CENTER LINE
- EX RIGHT-OF-WAY LINE
- EX PROPERTY LINE
- EX EASEMENT LINE
- PROPOSED PERMANENT EASEMENT LINE
- TEMPORARY CONSTRUCTION LIMITS
- PROPOSED RIGHT-OF-WAY LINE

BASIS OF BEARING

NORTH AMERICAN DATUM OF 1983 AS BASED ON FEDERAL BASE NETWORK/COOPERATIVE BASE NETWORK OBSERVATIONS IN 1994 (AKA NAD83/94). NEVADA STATE PLANE WEST ZONE AS DETERMINED WITH REAL TIME KINEMATIC (RTK) GPS OBSERVATIONS MADE BETWEEN FEBRUARY 2 AND 12, 2010 WITH CORRECTIONS TRANSMITTED BY THE REGIONAL BASE NETWORK CONTINUOUSLY OPERATING REFERENCE STATION (CORS) DOT1. GROUND COORDINATES HEREON REFLECT GRID COORDINATES MULTIPLIED BY A COMBINED GRID TO GROUND FACTOR OF 1.0002 (AKA CARSON CITY MODIFIED).

BASIS OF ELEVATION

THE BASIS OF ELEVATION FOR THIS PROJECT IS A 2" BRASS CAP NDOT CONTROL MONUMENT STAMPED 433234M, IN THE NORTH END OF A CONCRETE WING WALL ON THE EAST SIDE OF BUTTI WAY, APPROXIMATELY 0.13 MILES NORTH OF THE INTERSECTION WITH FIFTH STREET, ELEVATION=4624.79 (NAVD 88)

CONTROL POINT DATA

POINT #	NORTHING	EASTING	ELEVATION	DESC
HV-29	14736928.35	2294085.41	4649.03	PK NAIL
HV-30	14736077.66	2294077.88	4644.79	PK NAIL
CP-202	14736510.50	2294135.07	4646.55	PK NAIL
CP-201	14736557.01	2294612.31	4643.69	PK NAIL
HV-31	14736538.92	2294724.55	4643.33	PK NAIL
CP-200	14736526.00	2295018.10	4642.97	PK NAIL
HV-32	14736984.91	2295758.96	4639.78	REBAR W/ CONTROL CAP
HV-33	14736048.20	2295687.48	4637.70	REBAR W/ CONTROL CAP
HV-34	14736399.68	2296494.66	4633.93	REBAR W/ CONTROL CAP
HV-35	14736521.17	2297442.58	4630.63	REBAR W/ CONTROL CAP
HV-36	14736562.76	2298767.40	4625.41	REBAR W/ CONTROL CAP
CP-204	14736568.30	2298898.45	4628.71	REBAR W/ CONTROL CAP
CP-203	14736433.97	2299261.70	4636.35	PK NAIL

PROJ. MGR.: KLD/RCB
PROJ ASSOC.: CJT
CHECKED BY: RCB
DWG NO.: CCCCN15
SCALE (HORIZ): 1"=60'
SCALE (VERT): ----
PLOT DATE: JUNE 2011

CARSON CITY
PUBLIC WORKS DEPARTMENT
3505 BUTTI WAY CARSON CITY, NEVADA 89701
PH: 887-2355 FAX: 887-2112

Manhard CONSULTING LTD
3476 Executive Pointe Way, Suite 12 Carson City, NV 89706
PH: (775) 882-5620 FH: (775)883-7282

PROFESSIONAL ENGINEER - STATE OF NEVADA
REBECCA C. BERNIER
Exp:12/31/12
CIVIL
No. 19279

REV.	DATE	DESCRIPTION	BY	APP.

EAST-WEST WATER TRANSMISSION MAIN PH 1
PROJECT No: 2011-301
INDEX & CONTROL PLAN

SHEET 03 OF 35

FOR BIDDING PURPOSES ONLY

BID #1011-243

June 16, 2011 - 08:15 Dwg Name: P:\Cccon15\dwg\Eng\Final Drawings\PLAN SET\CS3-CS5.dwg Updated By: cthomas

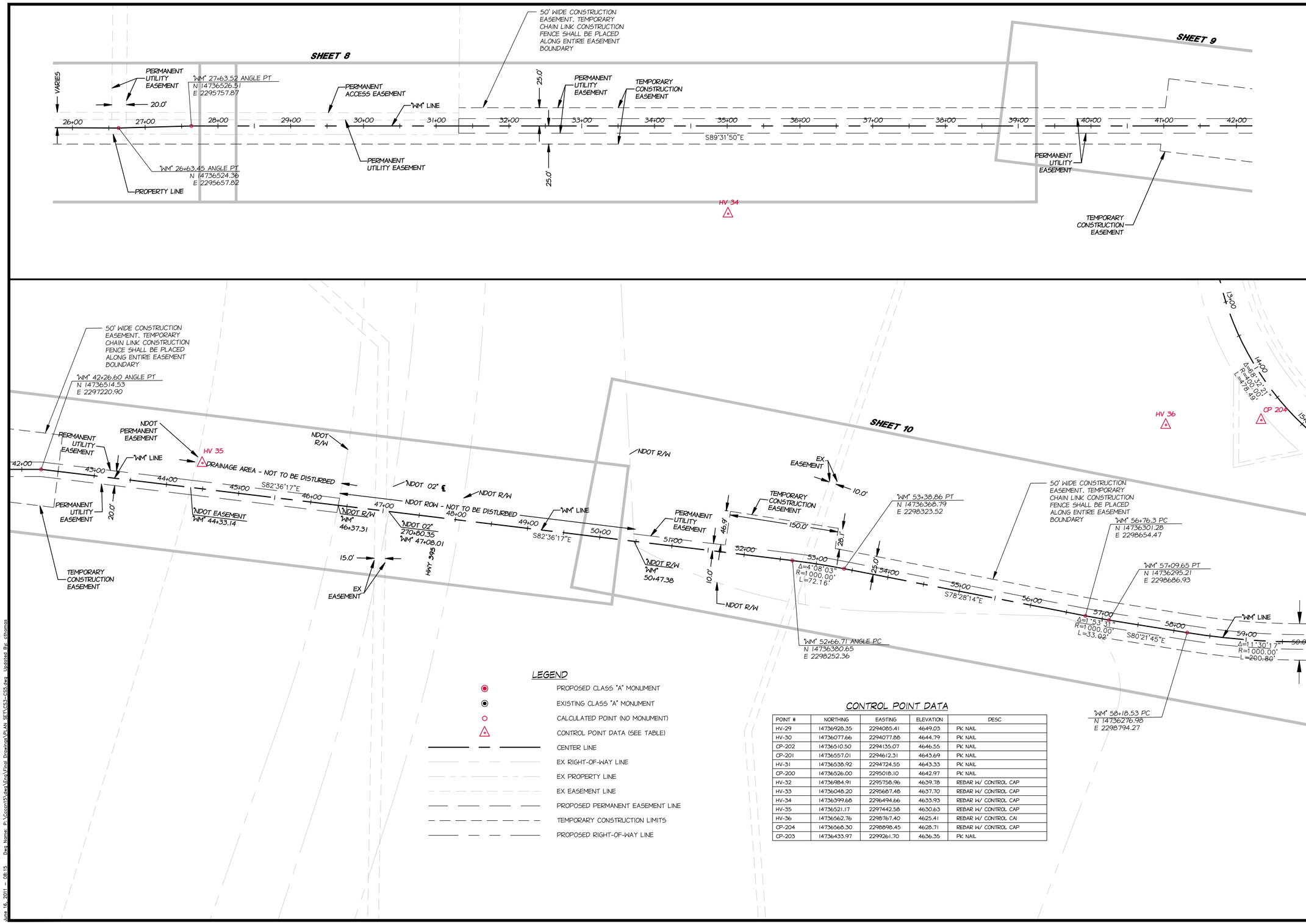

LEGEND

- PROPOSED CLASS "A" MONUMENT
- EXISTING CLASS "A" MONUMENT
- CALCULATED POINT (NO MONUMENT)
- CONTROL POINT DATA (SEE TABLE)
- CENTER LINE
- EX RIGHT-OF-WAY LINE
- EX PROPERTY LINE
- EX EASEMENT LINE
- PROPOSED PERMANENT EASEMENT LINE
- TEMPORARY CONSTRUCTION LIMITS
- PROPOSED RIGHT-OF-WAY LINE

CONTROL POINT DATA

POINT #	NORTHING	EASTING	ELEVATION	DESC
HV-29	14736928.35	2294085.41	4649.03	PK NAIL
HV-30	14736077.66	2294077.88	4644.79	PK NAIL
CP-202	14736510.50	2294135.07	4646.55	PK NAIL
CP-201	14736557.01	2294612.31	4643.69	PK NAIL
HV-31	14736538.92	2294724.55	4643.33	PK NAIL
CP-200	14736526.00	2295018.10	4642.97	PK NAIL
HV-32	14736984.91	2295758.96	4639.78	REBAR W/ CONTROL CAP
HV-33	14736048.20	2295687.48	4637.70	REBAR W/ CONTROL CAP
HV-34	14736399.68	2296494.66	4633.93	REBAR W/ CONTROL CAP
HV-35	14736521.17	2297442.58	4630.63	REBAR W/ CONTROL CAP
HV-36	14736562.76	2298767.40	4625.41	REBAR W/ CONTROL CAI
CP-204	14736568.30	2298898.45	4628.71	REBAR W/ CONTROL CAP
CP-203	14736433.97	2299261.70	4636.35	PK NAIL

PROJ. MGR.: KLD/RCB
PROJ ASSOC.: CJT
CHECKED BY: RCB
DWG NO.: CCCCN15
SCALE (HORIZ): 1"=60'
SCALE (VERT): ----
PLOT DATE: JUNE 2011

CARSON CITY
PUBLIC WORKS DEPARTMENT
3505 BUTTI WAY CARSON CITY, NEVADA 89701
PH: 887-2355 FAX: 887-2112

Manhard CONSULTING LTD
3478 Executive Pointe Way, Suite 12 Carson City, NV 89706
PH: (775) 882-5620 FH: (775)883-7282

PROFESSIONAL ENGINEER - STATE OF NEVADA
REBECCA C. BERNIER
Exp12/31/12
CIVIL
No. 19279

REV.	DATE	DESCRIPTION	BY	APP.

BID #1011-243

EAST-WEST WATER TRANSMISSION MAIN PH 1
PROJECT No: 2011-301
INDEX & CONTROL PLAN

SHEET 04 OF 35

FOR BIDDING PURPOSES ONLY

June 16, 2011 - 08:15 Dwg Name: P:\Cccon15\dwg\Eng\Final Drawings\PLAN SET\CS3-CS5.dwg Updated By: cthomas

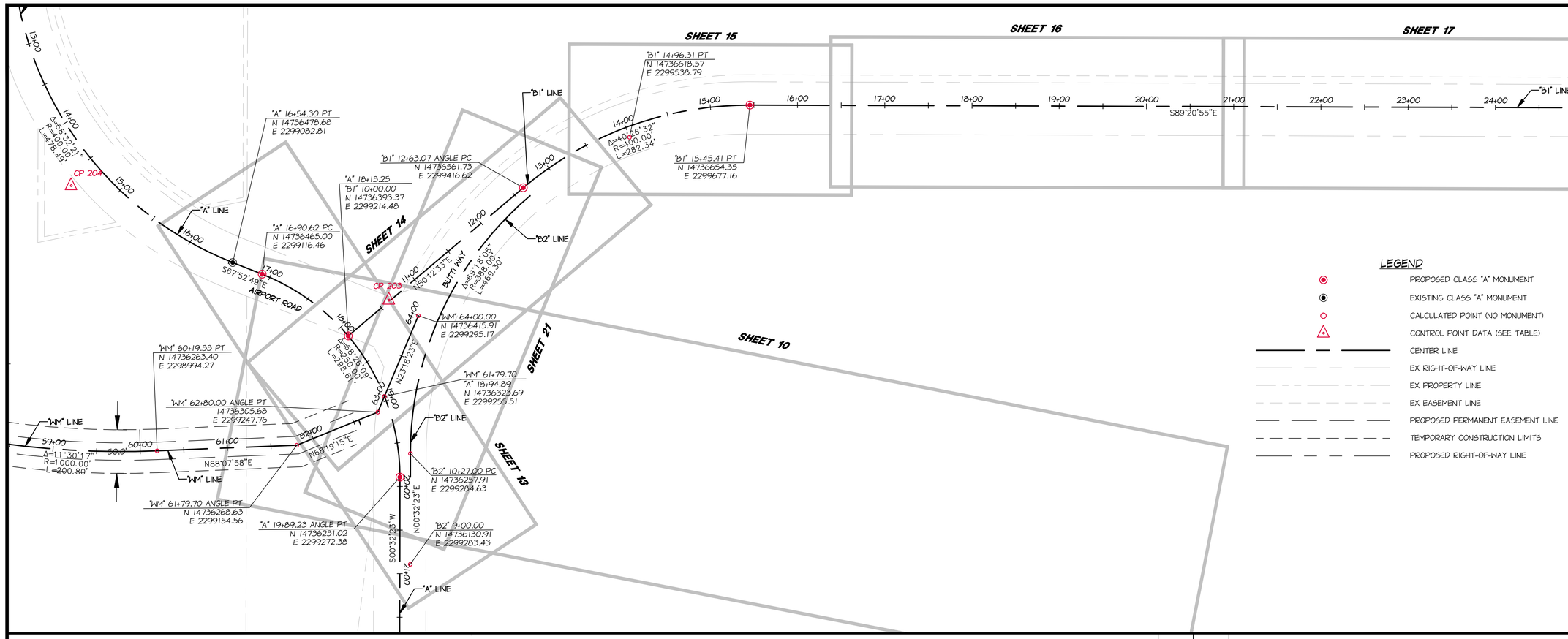

CONTROL POINT DATA

POINT #	NORTHING	EASTING	ELEVATION	DESC
HV-29	14736928.35	2294085.41	4649.03	PK NAIL
HV-30	14736077.66	2294077.88	4644.79	PK NAIL
CP-202	14736510.50	2294135.07	4646.55	PK NAIL
CP-201	14736557.01	2294612.31	4643.69	PK NAIL
HV-31	14736538.92	2294724.55	4643.33	PK NAIL
CP-200	14736526.00	2295018.10	4642.97	PK NAIL
HV-32	14736984.91	2295758.96	4639.78	REBAR W/ CONTROL CAP
HV-33	14736048.20	2295687.48	4637.70	REBAR W/ CONTROL CAP
HV-34	14736399.68	2296494.66	4633.93	REBAR W/ CONTROL CAP
HV-35	14736521.17	2297442.58	4630.63	REBAR W/ CONTROL CAP
HV-36	14736562.76	2298767.40	4625.41	REBAR W/ CONTROL CAI
CP-204	14736568.30	2298898.45	4628.71	REBAR W/ CONTROL CAP
CP-203	14736433.97	2299261.70	4636.35	PK NAIL

PROJ. MGR.: KLD/RCB
PROJ ASSOC.: CJT
CHECKED BY: RCB
DWG NO.: CCCCN15
SCALE (HORIZ): 1"=60'
SCALE (VERT): ----
PLOT DATE: JUNE 2011

CARSON CITY
PUBLIC WORKS DEPARTMENT
3505 BUTTI WAY CARSON CITY, NEVADA 89701
PH: 887-2355 FAX: 887-2112

Manhard CONSULTING LTD
3476 Executive Pointe Way, Suite 12 Carson City, NV 89706
PH: (775) 882-5630 PH: (775)885-7282

PROFESSIONAL ENGINEER - STATE OF NEVADA
REBECCA C. BERNER
Exp:12/31/12
CIVIL
No. 19279

REV.	DATE	DESCRIPTION	BY	APP.

EAST-WEST WATER TRANSMISSION MAIN PH 1
PROJECT No: 2011-301
INDEX & CONTROL PLAN

SHEET 05 OF 35

BID #1011-243

FOR BIDDING PURPOSES ONLY

June 16, 2011 - 08:15 Dwg Name: P:\Cccn15\dwg\Eng\Final Drawings\PLAN SET\CS3-CS5.dwg Updated By: cthomas

LEGEND:

- 2" GRIND AND OVERLAY ON EAST SIDE OF SALIMAN DRIVE
- REMOVE EX AC SECTION FROM EP/EDGE OF GUTTER TO EP/EDGE OF GUTTER AS SHOWN. REPLACE WITH 3" AC ON 6" AGG BASE. CONCRETE TO REMAIN IN PLACE UNLESS INDICATED OTHERWISE.

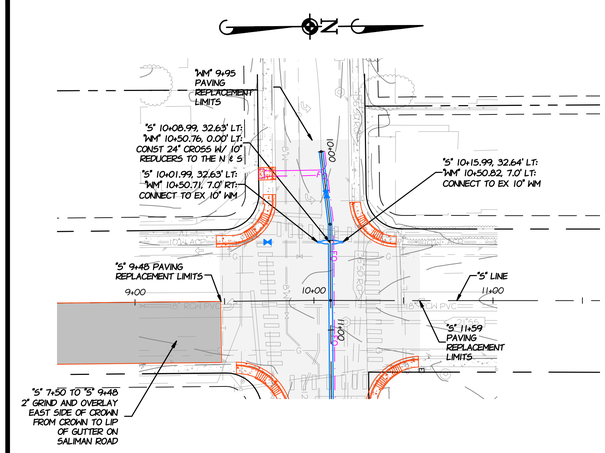

SALIMAN ROAD

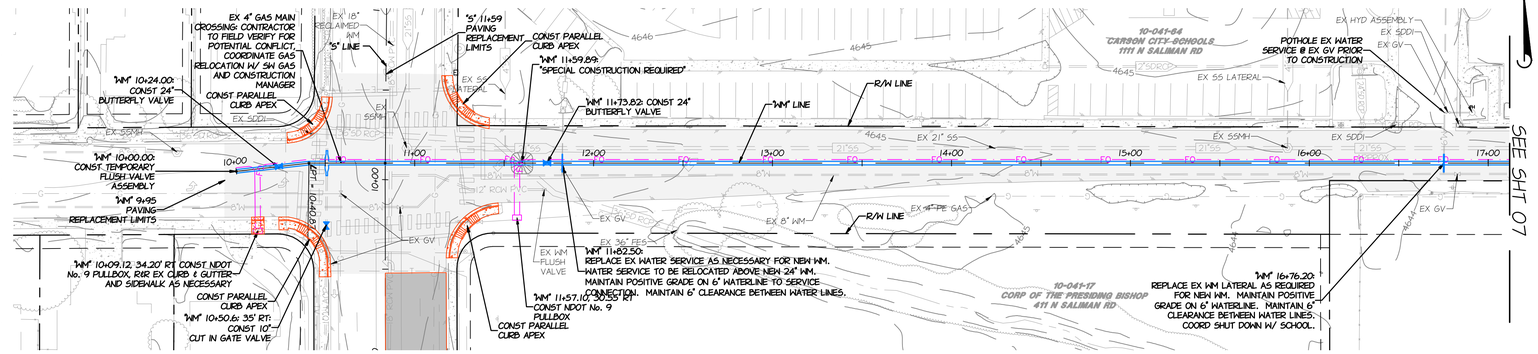

ROBINSON STREET

GRAPHIC SCALE
40 0 20 40
(IN FEET)
1 INCH = 40 FEET

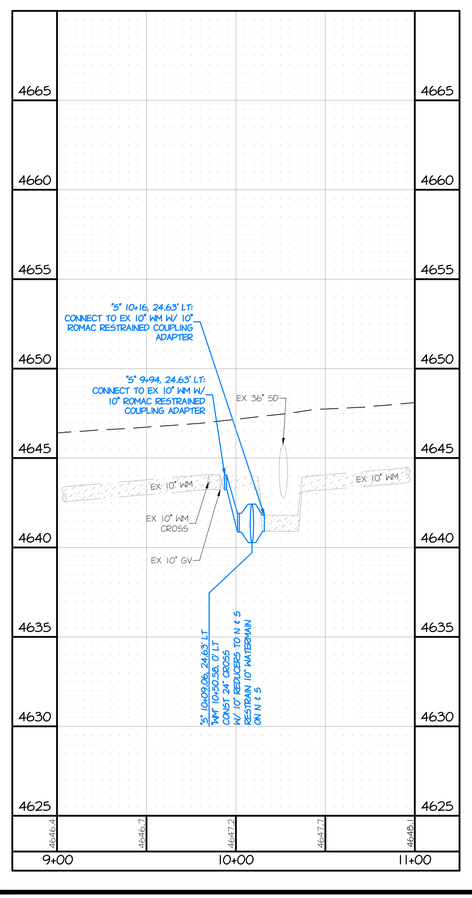

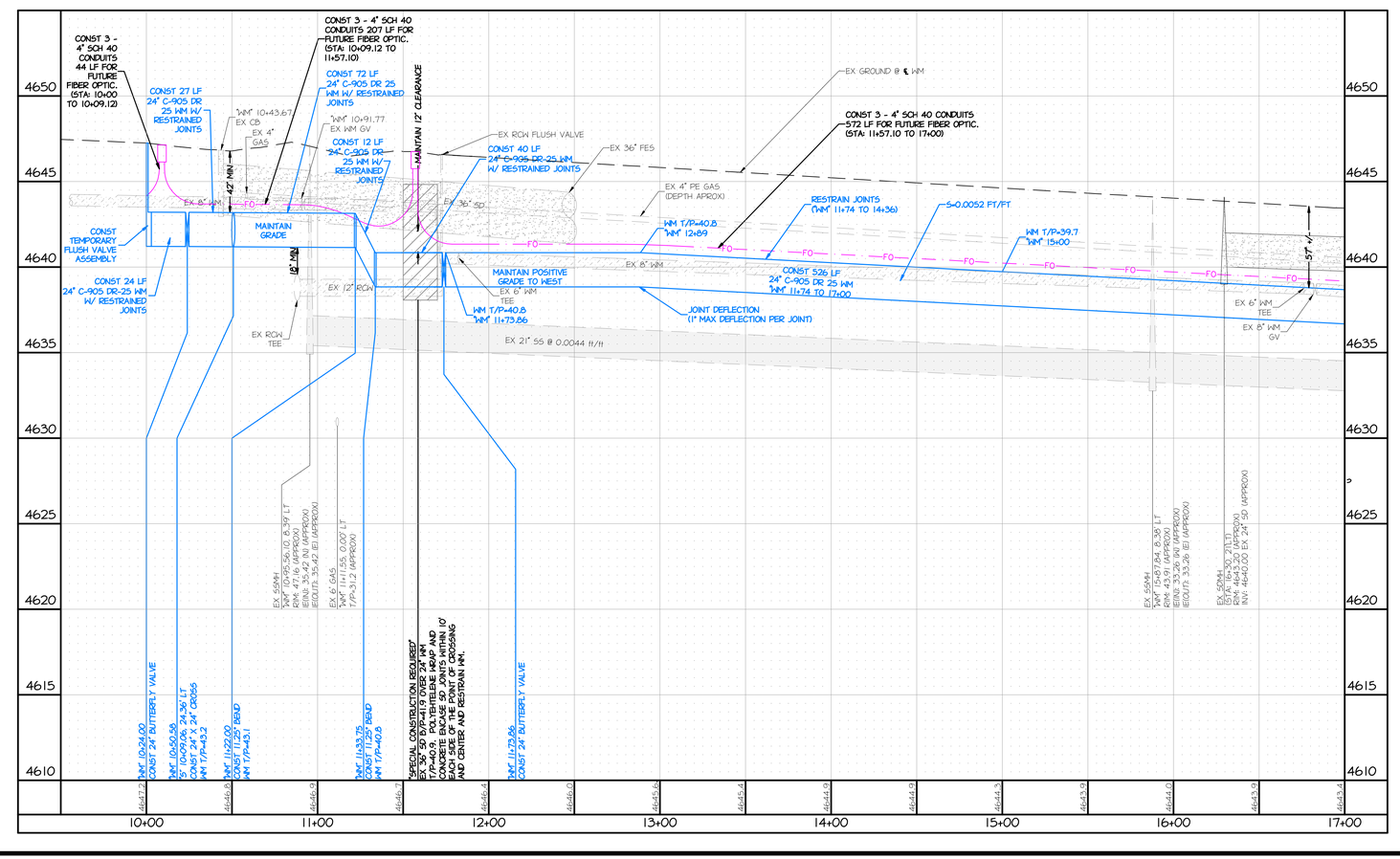

REV.	DATE	DESCRIPTION	BY	APP.

PROJ. MGR.: KLD/RCB
PROJ ASSOC.: CJT
CHECKED BY: RCB
DWG NO.: CCCCN15
SCALE (HORIZ): 1"=40'
SCALE (VERT): 1"=4'
PLOT DATE: JUNE 2011

CARSON CITY PUBLIC WORKS DEPARTMENT
3505 BUTTI WAY CARSON CITY, NEVADA 89701
PH: 887-2355 FAX: 887-2112

Manhard CONSULTING LTD
3476 Executive Pointe Way, Suite 12 Carson City, NV 89706
PH: (775) 883-7900 FX: (775) 883-7982

PROFESSIONAL ENGINEER - STATE OF NEVADA
REBECCA C. BERNIER
Exp:12/31/12
CIVIL
No. 19279

EAST-WEST WATER TRANSMISSION MAIN PH 1
PROJECT No: 2011-301

WATERLINE PLAN & PROFILE
10+00 TO 17+00

SHEET 06 OF 35

FOR BIDDING PURPOSES ONLY

BID #1011-243

June 16, 2011 - 11:26 Dwg Name: P:\Ccccn15\dwg\Eng\Final Drawing\PLAN SET\W1-W5 TRANSMISSION MAIN.dwg Updated By: cthomas

LEGEND:

- REMOVE EX AC SECTION FROM EP/EDGE OF GUTTER TO EP/EDGE OF GUTTER AS SHOWN. REPLACE WITH 3" AC ON 6" AGG BASE. CONCRETE TO REMAIN IN PLACE UNLESS INDICATED OTHERWISE.
- REPLACE EX AG BASE ROAD AS NECESSARY, 6" THICKNESS.
- HYDROSEED ALL DISTURBED AREAS.

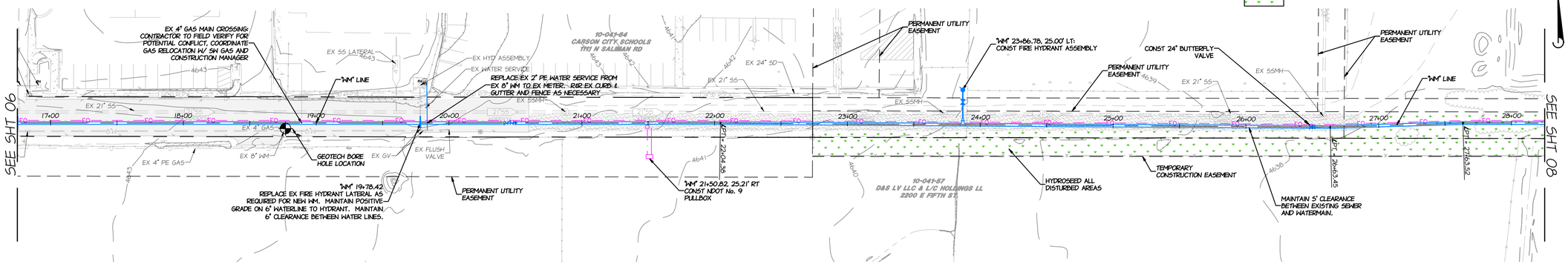

EAST-WEST WATER TRANSMISSION MAIN

GRAPHIC SCALE
40 0 20 40
(IN FEET)
1 INCH = 40 FEET

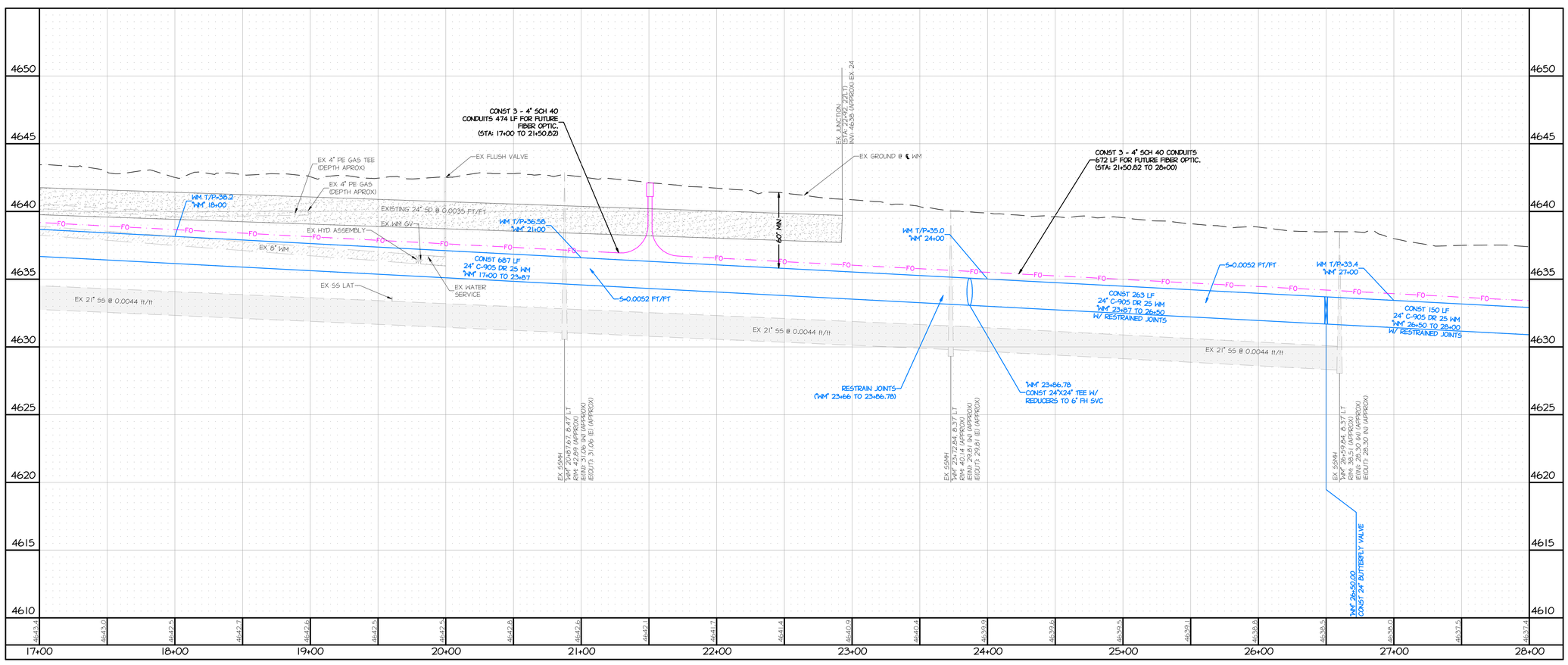

PROJ. MGR.:	KLD/RCB
PROJ ASSOC.:	CJT
CHECKED BY:	RCB
DWG NO.:	CCCCN15
SCALE (HORIZ):	1"=40'
SCALE (VERT):	1"=4'
PLOT DATE:	JUNE 2011

CARSON CITY PUBLIC WORKS DEPARTMENT
3505 BUTTI WAY CARSON CITY, NEVADA 89701
PH: 887-2355 FAX: 887-2112

Manhard CONSULTING LTD
3476 Executive Pointe Way, Suite 12 Carson City, NV 89706
PH: (775) 882-5620 FH: (775)883-7282

PROFESSIONAL ENGINEER - STATE OF NEVADA
REBECCA C. BERNIER
Exp12/31/12
CIVIL
No. 19279

REV.	DATE	DESCRIPTION	BY	APP.

BID #1011-243

EAST-WEST WATER TRANSMISSION MAIN PH 1
PROJECT No: 2011-301

WATERLINE PLAN & PROFILE
17+00 TO 28+00

SHEET 07 OF 35

FOR BIDDING PURPOSES ONLY

June 16, 2011 - 11:28 Dwg Name: P:\Ccccn15\dwg\Eng\Final Drawings\PLAN SET\WT-WS TRANSMISSION MAIN.dwg Updated By: cthomas

LEGEND:

HYDROSEED ALL DISTURBED AREAS.

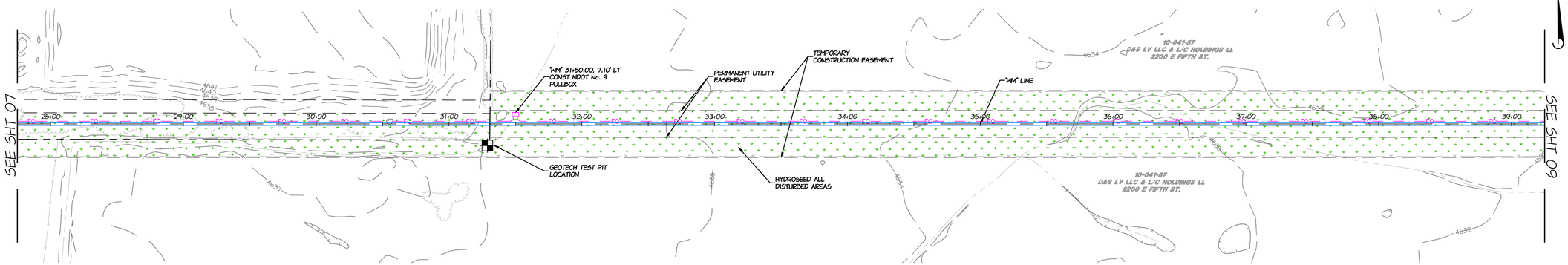

GRAPHIC SCALE
40 0 20 40
(IN FEET)
1 INCH = 40 FEET

EAST-WEST WATER TRANSMISSION MAIN

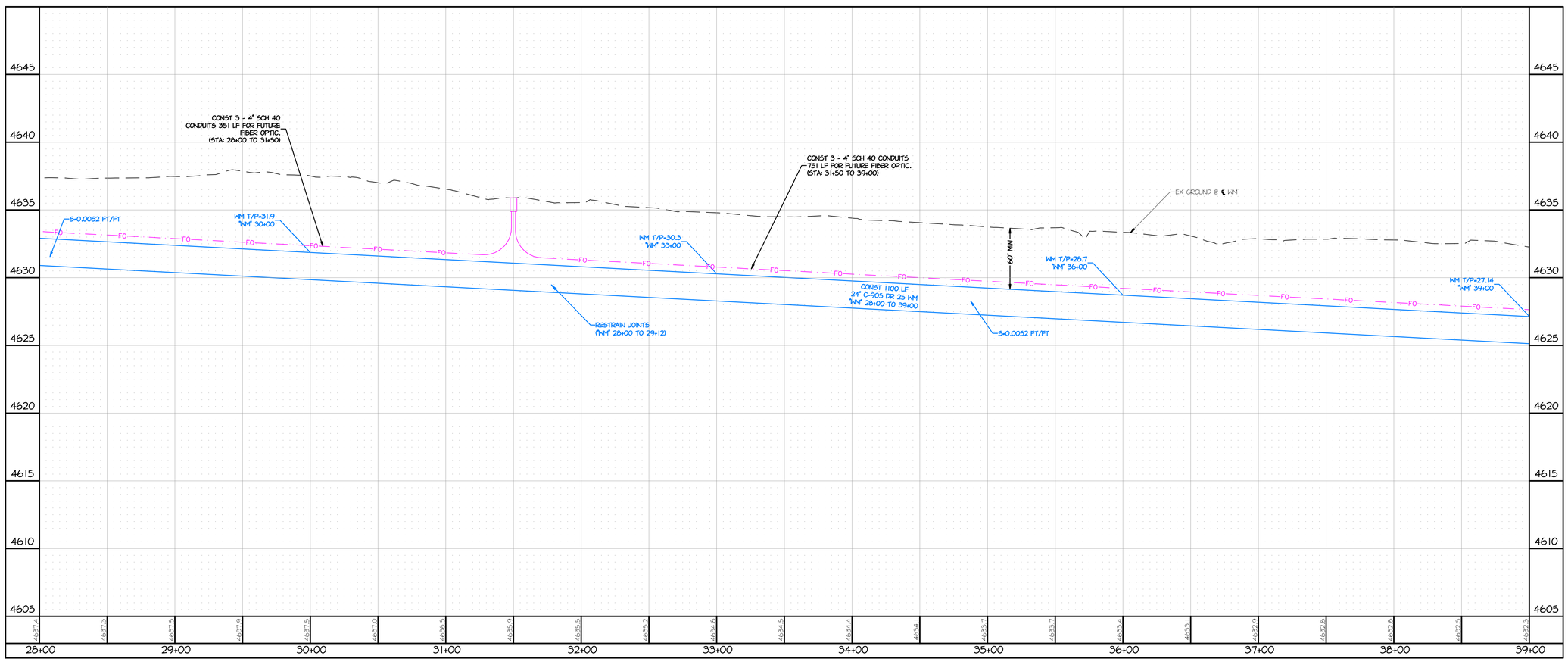

PROJ. MGR.: KLD/RCB
PROJ ASSOC.: CJT
CHECKED BY: RCB
DWG NO.: CCCCN15
SCALE (HORIZ): 1"=40'
SCALE (VERT): 1"=4'
PLOT DATE: JUNE 2011

CARSON CITY
PUBLIC WORKS DEPARTMENT
3505 BUTTI WAY CARSON CITY, NEVADA 89701
PH: 887-2355 FAX: 887-2112

Manhard CONSULTING LTD
3476 Executive Pointe Way, Suite 12 Carson City, NV 89706
PH: (775) 882-5630 FX: (775)883-7282

PROFESSIONAL ENGINEER - STATE OF NEVADA
REBECCA C. BERNIER
Exp12/31/12
CIVIL
No. 19279

REV.	DATE	DESCRIPTION	BY	APP.

EAST-WEST WATER TRANSMISSION MAIN PH 1
PROJECT No: 2011-301
WATERLINE PLAN & PROFILE
28+00 TO 39+00

SHEET 08 OF 35

BID #1011-243

FOR BIDDING PURPOSES ONLY

June 16, 2011 - 11:26 Dwg Name: P:\Ccecon15\dwg\Eng\Final Drawings\PLAN SET\WI-WS TRANSMISSION MAIN.dwg Updated By: cthomas

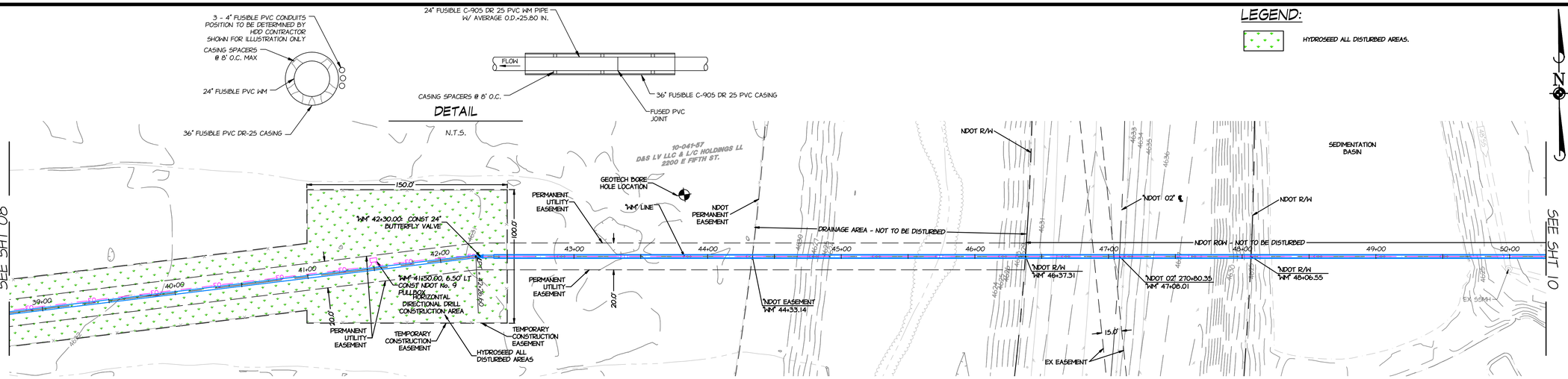

GRAPHIC SCALE
40 0 20 40
(IN FEET)
1 INCH = 40 FEET

EAST-WEST WATER TRANSMISSION MAIN

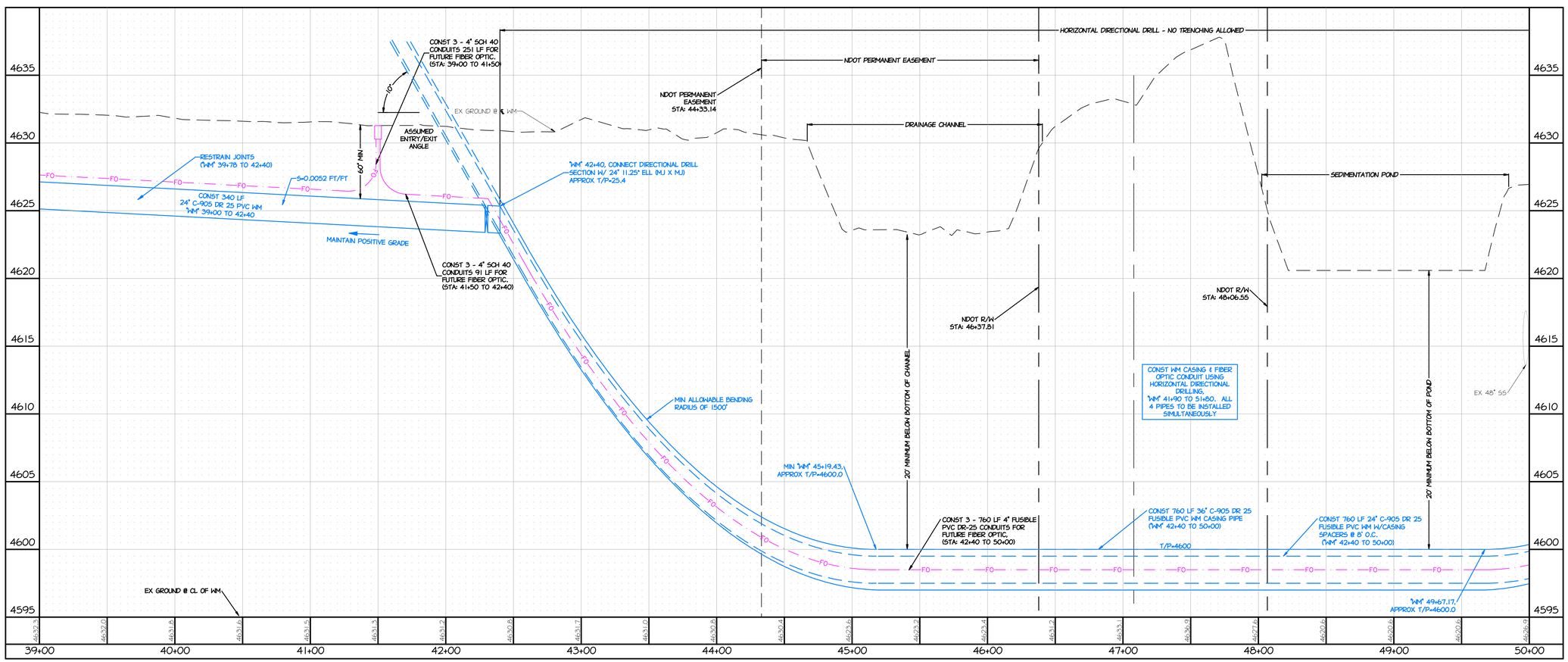

PROJ. MGR.:	KLD/RCB
PROJ ASSOC.:	CJT
CHECKED BY:	RCB
DWG NO.:	CCCCN15
SCALE (HORIZ):	1"=40'
SCALE (VERT):	1"=4'
PLOT DATE:	JUNE 2011

CARSON CITY
PUBLIC WORKS DEPARTMENT
3505 BUTTI WAY CARSON CITY, NEVADA 89701
PH: 887-2355 FAX: 887-2112

Manhard CONSULTING LTD
3478 Executive Pointe Way, Suite 12 Carson City, NV 89706
PH: (775) 882-5620 FH: (775)883-7282

PROFESSIONAL ENGINEER - STATE OF NEVADA
REBECCA C. BERNIER
Exp:12/31/12
CIVIL
No. 19279

REV.	DATE	DESCRIPTION	BY	APP.

BID #1011-243

EAST-WEST WATER TRANSMISSION MAIN PH 1
PROJECT No: 2011-301
WATERLINE PLAN & PROFILE
39+00 TO 50+00

SHEET 09 OF 35

FOR BIDDING PURPOSES ONLY

June 16, 2011 - 11:26 Dwg Name: P:\Ccccn15\Dwg\Eng\Final Drawings\PLAN SET\WI-WS TRANSMISSION MAIN.dwg Updated By: cthomas

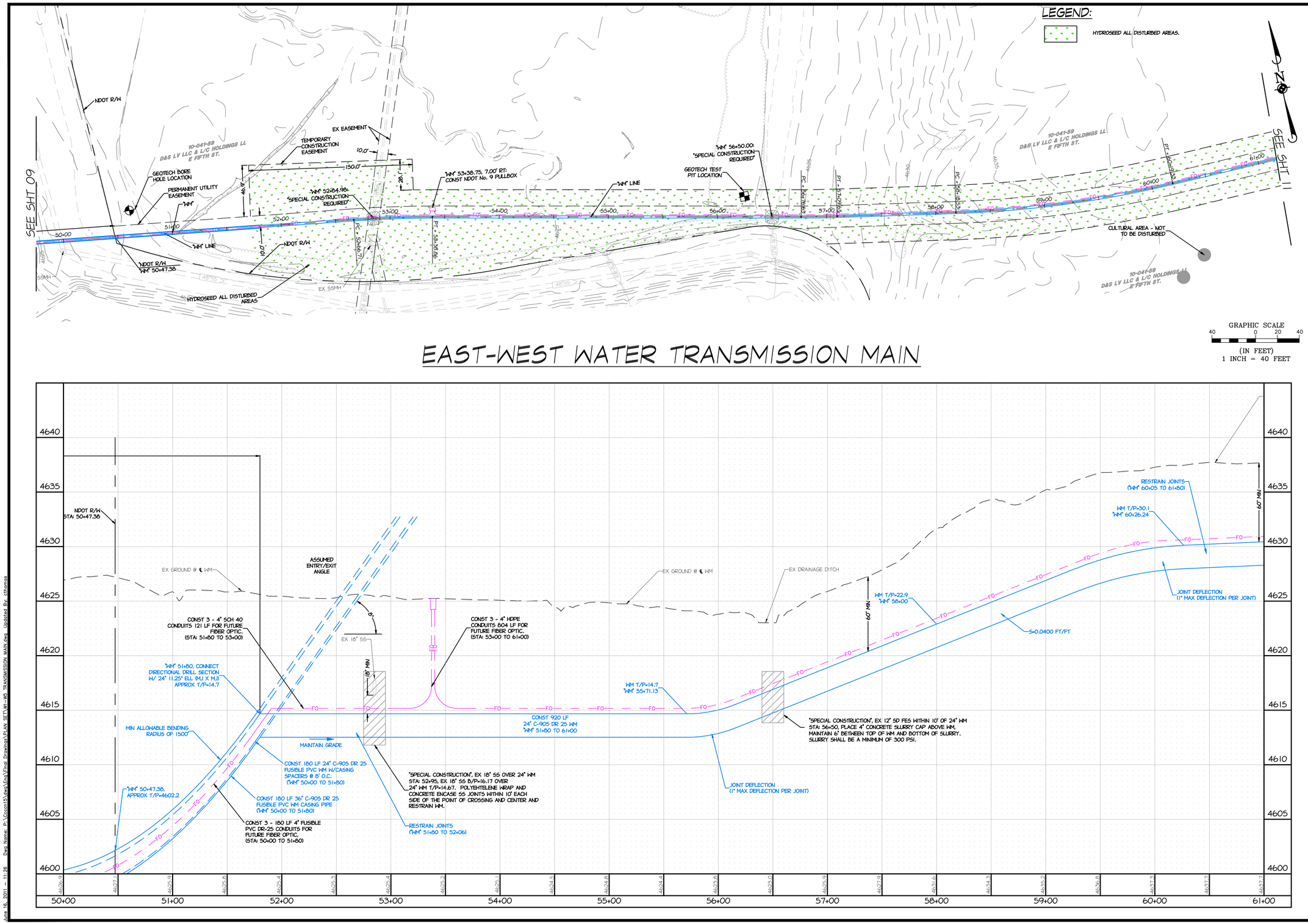

EAST-WEST WATER TRANSMISSION MAIN

PROJ. MGR.:	KLD/RCB
PROJ ASSOC.:	CJT
CHECKED BY:	RCB
DWG NO.:	CCCCN15
SCALE (HORIZ):	1"=40'
SCALE (VERT):	1"=4'
PLOT DATE:	JUNE 2011

CARSON CITY
PUBLIC WORKS DEPARTMENT
3505 BUTTI WAY CARSON CITY, NEVADA 89701
PH: 887-2355 FAX: 887-2112

Manhard CONSULTING LTD
3476 Executive Pointe Way, Suite 12 Carson City, NV 89706
PH: (775) 882-5620 FH: (775)883-7282

PROFESSIONAL ENGINEER - STATE OF NEVADA
REBECCA C. BERNIER
Exp:12/31/12
CIVIL
No. 19279

REV.	DATE	DESCRIPTION	BY	APP.

BID #1011-243

EAST-WEST WATER TRANSMISSION MAIN PH 1
PROJECT No: 2011-301
WATERMAIN PLAN & PROFILE
50+00 TO 61+00

SHEET 10 OF 35

FOR BIDDING PURPOSES ONLY

June 16, 2011 - 11:26 Dwg Name: P:\Cccccn15\dwg\Final Drawings\PLAN SET\W1-W5 TRANSMISSION MAIN.dwg Updated By: ethomas

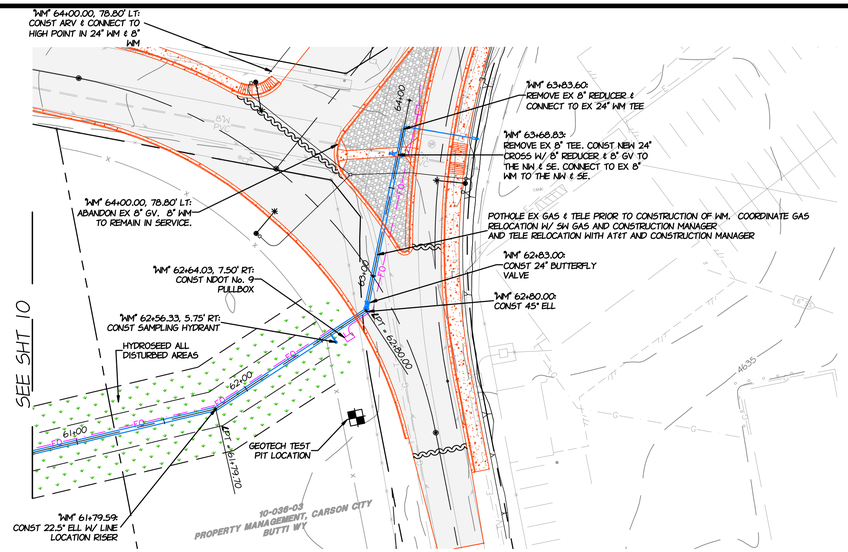

EAST-WEST WATER TRANSMISSION MAIN

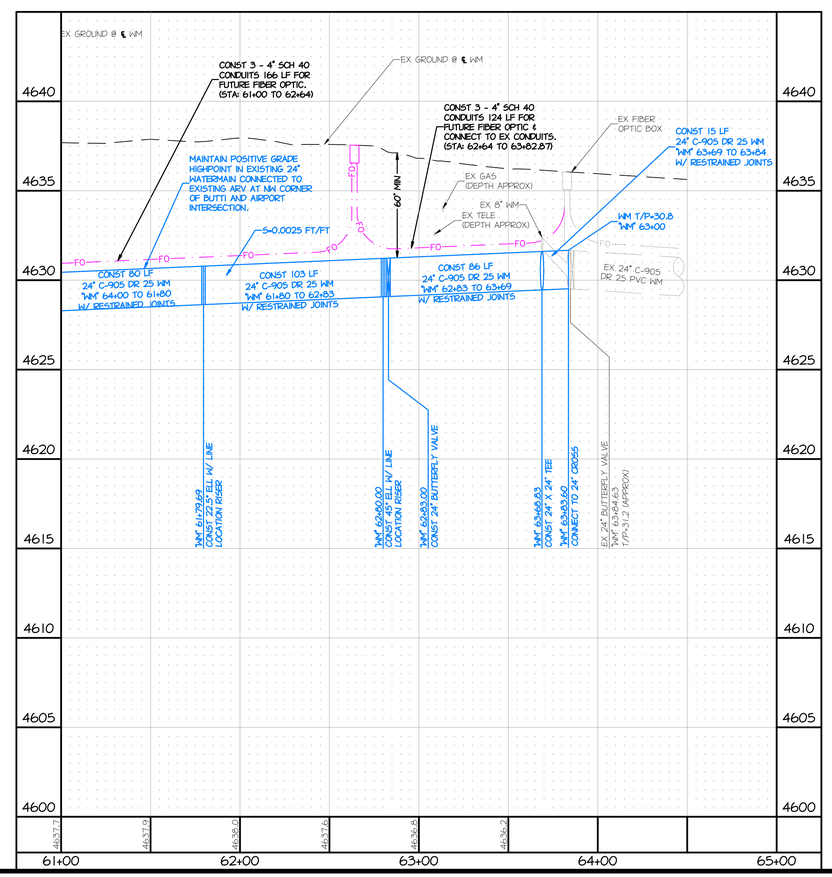

LEGEND:

HYDROSEED ALL DISTURBED AREAS.

GRAPHIC SCALE

40 0 20 40

(IN FEET)
1 INCH = 40 FEET

PROJ. MGR.: KLD/RCB
PROJ ASSOC.: CJT
CHECKED BY: RCB
DWG NO.: CCCCN15
SCALE (HORIZ): 1"=40'
SCALE (VERT): 1"=4'
PLOT DATE: JUNE 2011

CARSON CITY
PUBLIC WORKS DEPARTMENT
3505 BUTTI WAY CARSON CITY, NEVADA 89701
PH: 887-2355 FAX: 887-2112

Manhard CONSULTING LTD
3476 Executive Pointe Way, Suite 12 Carson City, NV 89706
PH: (775) 882-5630 PH: (775)885-7282

PROFESSIONAL ENGINEER - STATE OF NEVADA
REBECCA C. BERNIER
Exp:12/31/12
CIVIL
No. 19279

REV.	DATE	DESCRIPTION	BY	APP.

EAST-WEST WATER TRANSMISSION MAIN PH 1
PROJECT No: 2011-301
WATERMAIN PLAN & PROFILE
61+00 TO 65+00

SHEET 11 OF 35

FOR BIDDING PURPOSES ONLY

BID #1011-243

June 16, 2011 - 11:26 Dwg Name: P:\Cccon15\dwg\Eng\Final Drawings\PLAN SET\W1-W5 TRANSMISSION MAIN.dwg Updated By: cthomas

LEGEND

- INDICATES REMOVAL
- EX AC
- EX AGG BASE
- PROP AC
- PROP AGG BASE
- EX CONCRETE
- PROP CONCRETE

NOTES

1. BITUMINOUS MATERIAL WILL BE PG 64-28 NV UNLESS APPROVED OTHERWISE BY ENGINEER.
2. BITUMINOUS MATERIAL AGGREGATE SHALL BE TYPE 3 FOR ALL SURFACE COURSES EXCEPT WHERE OPEN GRADE SURFACE IS SPECIFIED AGGREGATE.
3. ALL CONCRETE EXPOSED TO FREEZE-THAW ENVIRONMENTS SHALL COMPLY WITH SECTION 202.12 OF THE STANDARD SPECIFICATIONS FOR PUBLIC WORKS CONSTRUCTION.
4. OFFSET DIMENSIONS SHOWN ON IMPROVEMENT SECTIONS DO NOT REFLECT PAVEMENT WIDTHS AT INTERSECTION RADIUS RETURNS. SEE PLAN.
5. CONTRACTOR HAS THE OPTION OF SUBSTITUTING RECYCLED ASPHALT CONCRETE BASE FOR CRUSHED AGGREGATE BASE IN THE LOWER 6 INCHES OF THE BASE SECTION PROVIDED THE RECYCLED ASPHALT CONCRETE BASE MEETS THE REQUIREMENTS OF THE GEOTECHNICAL INVESTIGATION PREPARED FOR THIS PROJECT AND THE REQUIREMENTS CONTAINED IN THE STANDARD SPECIFICATIONS. NO GUARANTEE IS OFFERED OR IMPLIED BY CARSON CITY THAT ASPHALT CONCRETE RECYCLED FROM THIS PROJECT WILL MEET THESE REQUIREMENTS.
6. AC PATCHING SECTION FOR SAWCUT LOCATION ADJACENT TO EXISTING OR PROPOSED CURBS SHALL BE 3" BITUMINOUS PAVEMENT MATERIAL OVER 6" TYPE 2 CLASS B AGGREGATE UNLESS EXISTING OR PROPOSED PAVEMENT SECTION HAS A DEEPER SECTION.

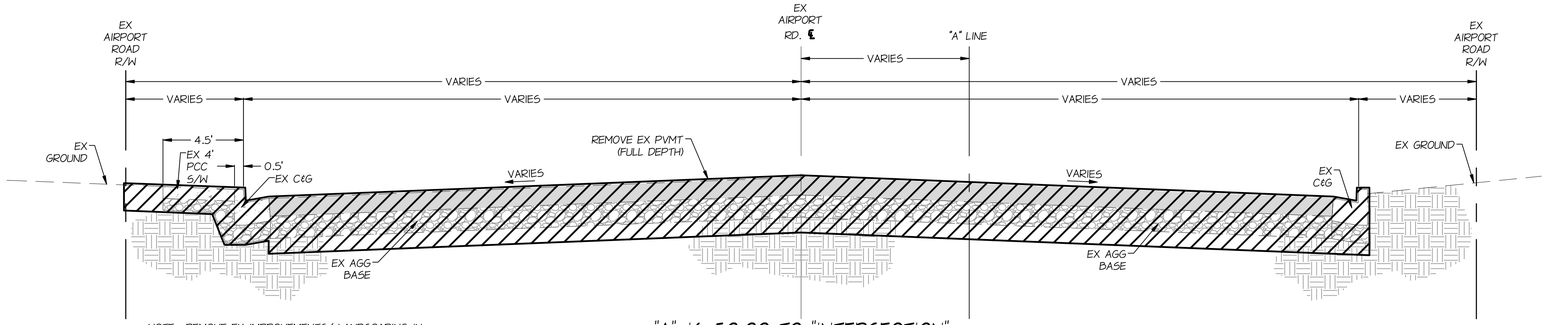

NOTE: REMOVE EX IMPROVEMENTS/ LANDSCAPING IN R/W AS REQUIRED FOR NEW IMPROVEMENTS.

"A" 16+50.00 TO "INTERSECTION" EXISTING SECTION

(NTS)

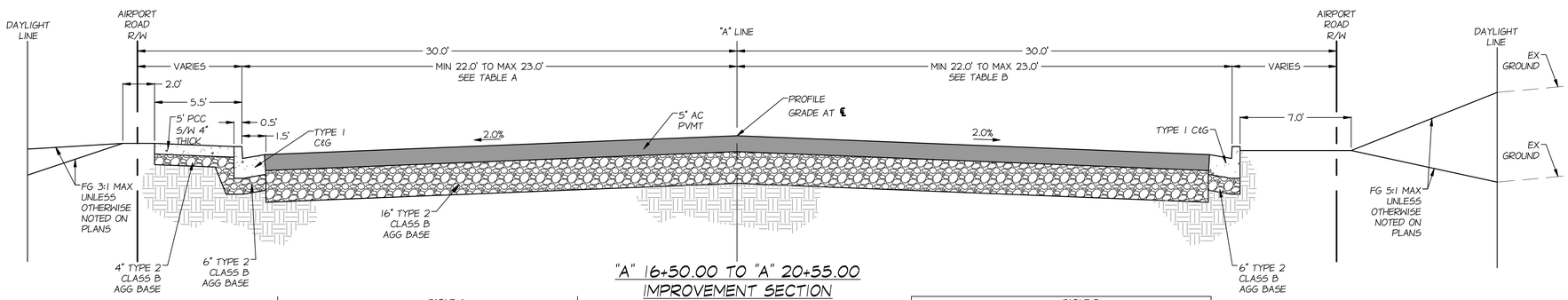

"A" 16+50.00 TO "A" 20+55.00 IMPROVEMENT SECTION

(NTS)

TABLE A

	STATION	WIDTH
	"A" 16+50.00 TO "R01" 16+90.62	VARIES - 22.00' TO 23.00'
	"A" 16+90.62 TO "R01" 17+71.25	23.00'
	"A" 17+71.25 TO "R01" 18+28.83	INTERSECTION
	"A" 18+28.83 TO "R" 18+44.35	INTERSECTION
*	"A" 18+44.35 TO "R" 18+90.48	VARIES - 22.37' TO 20.64'
	"A" 18+90.48 TO "R" 19+89.23	INTERSECTION
**	"A" 19+89.23 TO "R" 20+55.00	VARIES - 15.50' TO 14.50'

* NO SIDEWALK, CONST FG AS NOTED ON PLANS.
** NO TYPE 1 C&G OR SIDEWALK, DIMENSIONING FROM EP TO EP

TABLE B

	STATION	WIDTH
	"A" 16+50.00 TO "R01" 16+90.62	VARIES - 22.00' TO 23.00'
	"A" 16+90.62 TO "R01" 18+28.23	23.00'
	"A" 18+28.83 TO "R" 19+89.23	VARIES - 23.00' TO 17.00'
*	"A" 19+89.23 TO "R" 20+55.00	VARIES - 15.50' TO 14.50'

* NO TYPE 1 C&G, DIMENSIONING FROM EP TO EP

PROJ. MGR.: KLD/RCB
PROJ ASSOC.: CJT
CHECKED BY: RCB
DWG NO.: CCCCN15
SCALE (HORIZ): ----
SCALE (VERT): ----
PLOT DATE: JUNE 2011

CARSON CITY PUBLIC WORKS DEPARTMENT
3505 BUTTI WAY CARSON CITY, NEVADA 89701
PH: 887-2355 FAX: 887-2112

Manhard CONSULTING LTD
3478 Executive Pointe Way, Suite 12 Carson City, NV 89706
PH: (775) 882-5620 FH: (775)883-7282

PROFESSIONAL ENGINEER - STATE OF NEVADA
REBECCA C. BERNIER
Exp12/31/12
CIVIL
No. 19279

REV.	DATE	DESCRIPTION	BY	APP.

BID #1011-243

EAST-WEST WATER TRANSMISSION MAIN PH 1
PROJECT No: 2011-301

TYPICAL SECTIONS
AIRPORT ROAD

SHEET 12 OF 35

FOR BIDDING PURPOSES ONLY

June 16, 2011 - 12:39 Dwg Name: P:\Cccon15\dwg\Eng\Final Drawings\PLAN SET\R11-R12 TYPICALS.dwg Updated By: cthomas

LEGEND

- INDICATES REMOVAL
- EX AC
- EX AGG BASE
- PROP AC
- PROP AGG BASE
- PROP 4" TO 8" RIPRAP
- EX CONCRETE
- PROP CONCRETE

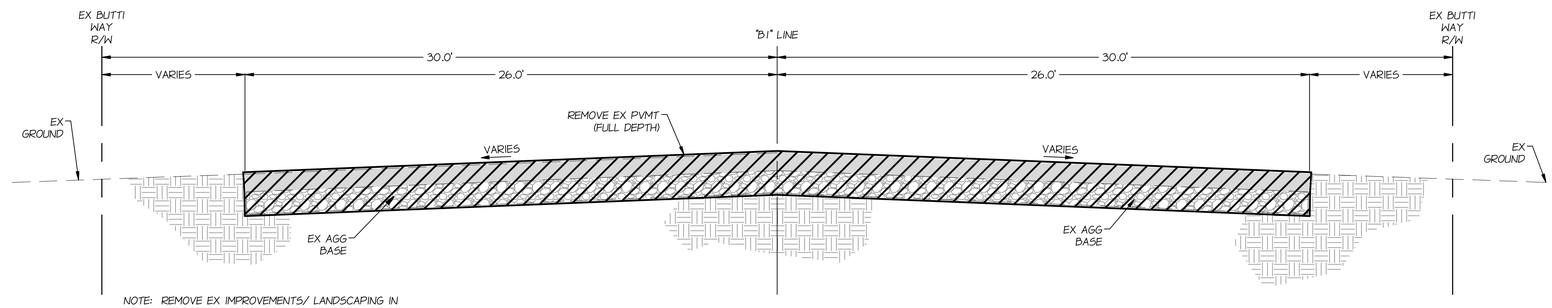

NOTE: REMOVE EX IMPROVEMENTS/ LANDSCAPING IN R/W AS REQUIRED FOR NEW IMPROVEMENTS.

"B1" 10+00.00 TO "B1" 36+02.14
EXISTING SECTION
(NTS)

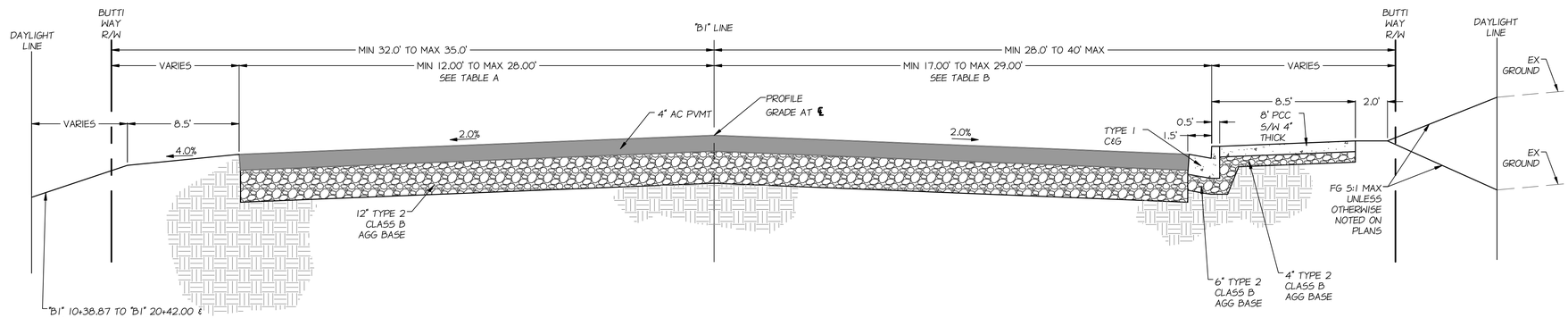

"B1" 10+38.87 TO "B1" 20+42.00 & "B1" 27+00.00 TO "B1" 35+53.88: FG 3:1 MAX UNLESS OTHERWISE NOTED ON PLANS. (SEE ROAD SIDE DITCH FOR "B1" 20+42.00 TO "B1" 27+00.00

TABLE A	
STATION	WIDTH
"B1" 10+00.00 TO "B1" 10+38.87	INTERSECTION
"B1" 10+28.87 TO "B1" 11+38.78	28.00'
"B1" 11+38.78 TO "B1" 12+34.78	VARIES - 28.00' TO 16.00'
"B1" 12+34.78 TO "B1" 29+03.73	16.00'
"B1" 29+03.73 TO "B1" 29+73.73	VARIES - 16.00' TO 12.00'
"B1" 29+73.73 TO "B1" 35+53.88	12.00'
"B1" 35+53.88 TO "B1" 36+02.14	INTERSECTION

TABLE B	
STATION	WIDTH
"B1" 11+22.98 TO "B1" 13+63.48	INTERSECTION
"B1" 13+63.48 TO "B1" 16+75.12	17.00'
"B1" 16+75.12 TO "B1" 17+95.12	INTERSECTION
"B1" 17+95.12 TO "B1" 22+34.57	17.00'
"B1" 22+34.57 TO "B1" 23+02.57	INTERSECTION
"B1" 23+02.57 TO "B1" 24+87.17	17.00'
"B1" 24+87.17 TO "B1" 25+57.17	INTERSECTION
"B1" 25+57.17 TO "B1" 28+46.00	17.00'
"B1" 28+46.00 TO "B1" 29+19.08	INTERSECTION
"B1" 29+19.08 TO "B1" 33+51.18	17.00'
"B1" 33+51.18 TO "B1" 34+47.18	VARIES - 17.00' TO 29.00'
"B1" 34+47.18 TO "B1" 35+74.13	29.00'
"B1" 35+74.13 TO "B1" 36+02.14	INTERSECTION

"B1" 20+42.00 TO "B1" 27+00.00
ROAD SIDE DITCH
(NTS)

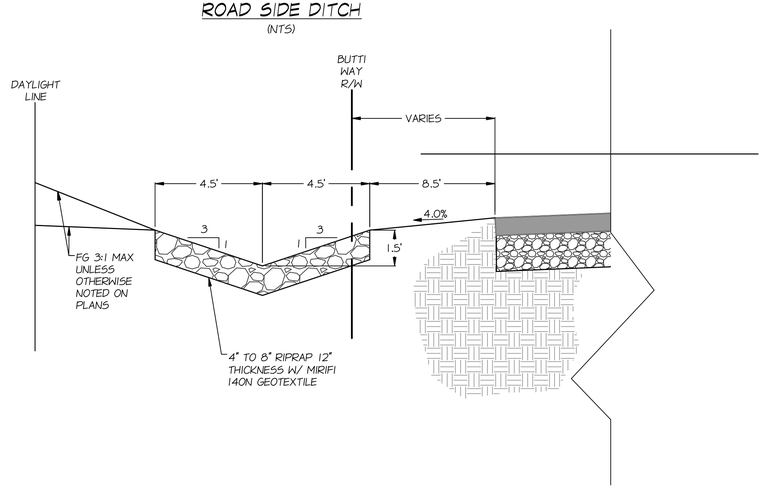

"B1" 10+00.00 TO "B1" 36+02.14
IMPROVEMENT SECTION
(NTS)

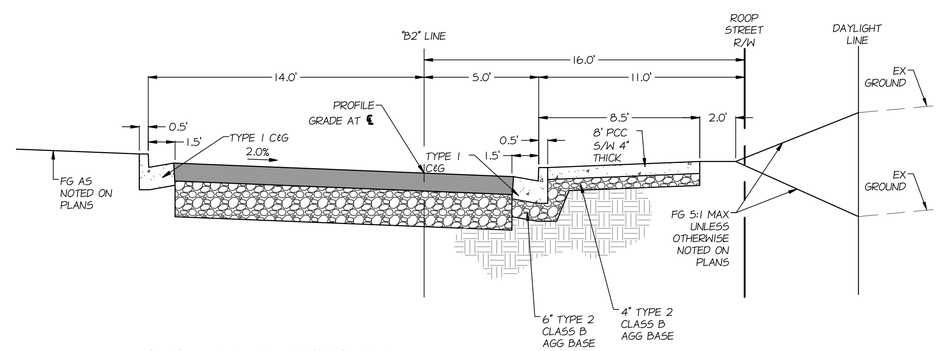

"B2" 11+02.40 TO "B2" 12+26.44
IMPROVEMENT SECTION
(NTS)

PROJ. MGR.: KLD/RCB
PROJ ASSOC.: CJT
CHECKED BY: RCB
DWG NO.: CCCCN15
SCALE (HORIZ): ----
SCALE (VERT): ----
PLOT DATE: JUNE 2011

CARSON CITY PUBLIC WORKS DEPARTMENT
3505 BUTTI WAY CARSON CITY, NEVADA 89701
PH: 887-2355 FAX: 887-2112

Manhard CONSULTING LTD
3478 Executive Pointe Way, Suite 12 Carson City, NV 89706
PH: (775) 882-5620 FH: (775)883-7282

PROFESSIONAL ENGINEER - STATE OF NEVADA
REBECCA C. BERNIER
Exp:12/31/12
CIVIL
No. 19279

REV.	DATE	DESCRIPTION	BY	APP.

BID #1011-243

EAST-WEST WATER TRANSMISSION MAIN PH 1
PROJECT No: 2011-301
TYPICAL SECTIONS
BUTTI WAY

SHEET 13 OF 35

FOR BIDDING PURPOSES ONLY

June 16, 2011 - 12:39 Dwg Name: P:\Cccn015\dwg\Eng\Final Drawings\PLAN SET\Rt1-Rt2 TYPICALS.dwg Updated By: cthomas