CARSON CITY CORPORATE YARD SALT/CINDER BUILDING AND SOLAR PHOTOVOLTAIC PROJECT

3303 BUTTI WAY, CARSON CITY, NEVADA 89701

APN 10-031-04

PROJECT No. 2.0821

BOARD OF SUPERVISORS

Bob Crowell	Mayor
Karen Abowd	Supervisor
Shelly Aldean	Supervisor
John McKenna	Supervisor
Molly Walt	Supervisor
Alan Glover	City Clerk

DESIGNED FOR:

CARSON CITY PUBLIC WORKS DEPARTMENT
OPERATIONS DIVISION
3505 BUTTI WAY
CARSON CITY, NV 89701
775-887-2355

GENERAL NOTES:

1. ALL WORK SHALL CONFORM TO THE "STANDARD SPECIFICATIONS FOR THE PUBLIC WORKS CONSTRUCTION" (SSPWC) AND THE "STANDARD DETAILS FOR PUBLIC WORKS CONSTRUCTION" (SDPWC) AS ADOPTED BY CARSON CITY. THE CONTRACTOR SHALL OBTAIN A PERMIT FOR PUBLIC WORKS CONSTRUCTION FROM THE CARSON CITY PERMIT CENTER PRIOR TO THE START OF CONSTRUCTION.

   ALL WORK IN NDOT RIGHT-OF-WAY SHALL CONFORM TO THE STATE OF NEVADA DEPARTMENT OF TRANSPORTATION STANDARD SPECIFICATIONS FOR ROAD AND BRIDGE CONSTRUCTION, 2001 EDITION AND THE STATE OF NEVADA DEPARTMENT OD TRANSPORTATION STANDARD PLANS FOR ROAD AND BRIDGE CONSTRUCTION, 2007 EDITION.

2. ALL TRAFFIC CONTROL AND BARRICADING WITHIN THE CARSON CITY RIGHT-OF-WAY SHALL CONFORM TO SECTION 100.33, 332.04 AND 332.05 OF THE STANDARD SPECIFICATIONS, PART VI OF THE MANUAL ON UNIFORM TRAFFIC CONTROL DEVICES, LATEST EDITION, AND THE UNR T2 CENTER, TEMPORARY TRAFFIC CONTROL GUIDELINES LATEST EDITION. A TRAFFIC CONTROL PLAN MUST BE SUBMITTED AND APPROVED BY THE CARSON CITY ENGINEERING DIVISION PRIOR TO ANY STREET CLOSURES.

3. THE CONTRACTOR SHALL CALL UNDERGROUND SERVICE ALERT "CALL BEFORE YOU DIG" (811) OR (1-800-227-2600) AT LEAST TWO (2) WORKING DAYS PRIOR TO START OF CONSTRUCTION AND COMPLY WITH THE REQUIREMENTS OF NRS AND NAC 455 THROUGHOUT THE COURSE OF THE WORK, SEWER SERVICE LATERALS ARE NOT OWNED OR MARKED BY CARSON CITY.

4. THE CONTRACTOR SHALL CALL THE CARSON CITY ENGINEERING DIVISION (887-2300) TWO (2) WORKING DAYS PRIOR TO THE START OF CONSTRUCTION. THE CONTRACTOR SHALL CALL ONE (1) WORKING DAY PRIOR TO REQUIRED INSPECTIONS AND TESTING. THE REQUIRED INSPECTIONS AND TESTING ARE LISTED ON THE INSPECTION RECORD ISSUED WITH EACH PERMIT. THE CONTRACTOR MUST HAVE THE PERMIT NUMBER AND THE DESCRIPTION LISTED ON THE INSPECTION RECORD TO SCHEDULE REQUIRED INSPECTIONS AND TESTING. FOR CITY CONTRACTED PROJECTS, THE CONTRACTOR SHALL SCHEDULE INSPECTIONS PER THE CONTRACT DOCUMENTS.

5. FINAL INSPECTIONS WILL BE PERFORMED BY CARSON CITY ENGINEERING DIVISION ACCORDING TO THE CARSON CITY INSPECTIONS AND TESTING PROCEDURES. NOTE: THESE PROCEDURES REQUIRE SUBMITTAL OF RECORD DRAWING PRINTS BY THE CONTRACTOR AND 10 WORKING DAYS TO PREPARE A FINAL PUNCH LIST. ALL CONDITIONS OF THE FINAL INSPECTION MUST BE COMPLETED PRIOR TO FINAL ACCEPTANCE OR ANY APPROVAL OF A CERTIFICATE OF OCCUPANCY BY THE CARSON CITY ENGINEERING DIVISION.

6. MODIFICATIONS TO THE APPROVED PLANS REQUIRES REVIEW AND APPROVAL BY THE CARSON CITY ENGINEERING DIVISION. WORK PERFORMED WITHOUT WRITTEN APPROVAL BY CARSON CITY ENGINEERING WILL REQUIRE REMOVAL AT THE CONTRACTORS EXPENSE.

7. THE APPROVED PLAN, PERMIT AND INSPECTION RECORD MUST BE ON THE JOB SITE AT ALL TIMES.

8. PLAN APPROVAL FOR SEWER AND WATER CONSTRUCTION SHALL EXPIRE ONE YEAR FROM DATE OF APPROVAL UNLESS CONSTRUCTION HAS BEEN INITIATED. (CCMC 12.06.180F, 12.01.140D)

9. THE CONTRACTOR WILL BE SOLELY AND COMPLETELY RESPONSIBLE FOR ACQUIRING A STORM WATER DISCHARGE PERMIT FROM THE NEVADA DIVISION OF ENVIRONMENTAL PROTECTION (NDEP) INCLUDING DEVELOPING, SUBMITTING AND IMPLEMENTING A STORM WATER POLLUTION PREVENTION PLAN (SWPPP). THE CONTRACTOR SHALL DEVELOP, PLACE AND MAINTAIN STORM WATER PROTECTION DEVICES IN COMPLIANCE WITH THE NEVADA CONTRACTORS FIELD GUIDE FOR CONSTRUCTION SITE BEST MANAGEMENT PRACTICES (JUNE 2008).

10. THE LOCATION OF EXISTING UTILITIES SHOWN ON THESE DRAWINGS IS BASED ON THE BEST INFORMATION AVAILABLE TO THE ENGINEER. IT SHALL BE THE CONTRACTORS RESPONSIBILITY TO VERIFY THESE LOCATIONS AT THE PROPOSED POINTS OF CONNECTIONS AND IN AREAS OF POSSIBLE CONFLICT WITH NEW UTILITY INSTALLATION, PRIOR TO BEGINNING CONSTRUCTION. POTHOLING IS REQUIRED. SHOULD THE CONTRACTOR FIND ANY DISCREPANCIES BETWEEN THE CONDITIONS EXISTING IN THE FIELD AND THE INFORMATION SHOWN ON THESE DRAWINGS, HE SHALL NOTIFY THE ENGINEER BEFORE PROCEEDING WITH CONSTRUCTION.

11. THE CONTRACTOR WILL BE SOLELY AND COMPLETELY RESPONSIBLE FOR THE CONDITIONS OF THE JOB SITE, INCLUDING SAFETY OF ALL PERSONS AND PROPERTY DURING PERFORMANCE OF THE WORK. THIS REQUIREMENT WILL APPLY CONTINUOUSLY AND NOT BE LIMITED TO NORMAL WORKING HOURS. THE CONTRACTOR SHALL BE RESPONSIBLE FOR THE DESIGN AND CONSTRUCTION OF PROPER SHORING OF TRENCHES IN ACCORDANCE WITH OCCUPATIONAL SAFETY LAWS. THE DUTIES OF THE ENGINEER DO NOT INCLUDE REVIEW OF THE ADEQUACY OF THE CONTRACTORS SAFETY IN, ON, OR NEAR THE CONSTRUCTION SITE.

12. SHOULD IT APPEAR THAT THE WORK TO BE DONE, OR ANY MATTER RELATIVE THERETO, IS NOT SUFFICIENTLY DETAILED OR EXPLAINED ON THESE PLANS, THE CONTRACTOR SHALL CONTACT THE ENGINEER FOR SUCH FURTHER EXPLANATIONS AS MAY BE NECESSARY.

VICINITY MAP
NTS

NORTH

SHEET INDEX:

SHEET NO.	SHEET TITLE
A0.0	TITLE SHEET
A1.0	SHADE STRUCTURE
A2.0	BOLLARD DETAILS
S0.1	PROJECT TITLE/ BASIS OF DESIGN/ INDEX TO DRAWINGS/ GEN. NOTES/ ABBREVIATIONS
S1.1	FLOOR PLAN
S1.2	ROOF PLAN
S2.1	FOUNDATION PLAN
S2.2	ROOF FRAMING PLAN
S3.1	BUILDING ELEVATIONS
S4.1	BUILDING SECTIONS AND DETAILS
S4.2	DETAILS
S5.1	SOLAR ARRAY PLAN AND DETAILS
E1.0	ELECTRICAL LAYOUT
E2.0	ELECTRICAL SINGLE LINE
E3.0	GENERAL NOTES/ ELECTRICAL SYMBOLS/ OUTLET
E4.0	DIAGRAM/ FLOOD LIGHTING DIAGRAM GENERAL NOTES/ ELECTRICAL SYMBOLS/ INTERIOR LIGHTING DIAGRAM/ WALLPACK LIGHTING DIAGRAM

REVIEWED FOR CITY REQUIREMENTS:

JEFF SHARP, P.E. - CITY ENGINEER DATE

DEVELOPMENT ENGINEERING DATE

DARREN SCHULZ, P.E. - DEPUTY PUBLIC WORKS DIRECTOR DATE

PERMIT # _____

DESIGNED BY: RC
DRAWN BY: CG
CHECKED BY: RC
DWG NO.:
SCALE (HORIZ): AS SHOWN
SCALE (VERT): AS SHOWN
PLOT DATE: 06-10-2011

CARSON CITY
PUBLIC WORKS DEPARTMENT
3505 BUTTI WAY CARSON CITY, NEVADA 89701
PH: 775-887-2355 FAX: 775-887-2112

PACIFICWEST
ENERGY SOLUTIONS
Commercial & Residential Solar Installation
561 Keystone Ave. # 300, Reno, NV 89503
800-310-9080 Office / 800-310-9596 Fax

PROFESSIONAL ENGINEER - STATE OF NEVADA
REGISTERED
RICHARD CHAPPELL
No. 12271
Electrical

REV.	DATE	DESCRIPTION	BY	APP'D
1	02/28/2011	INITIAL DESIGN	JC	RC
2	04/06/2011	REVISION # 1	CG	RC
3	05/23/2011	REVISION # 2	CG	RC

CARSON CITY CORPORATE YARD
SALT/CINDER BUILDING AND SOLAR
PHOTOVOLTAIC PROJECT
PROJECT No. 2.0821
TITLE SHEET

SHEET
A0.0

NOTES:

1. SHADE STRUCTURE TO BE BUILT WITH 4" DIAMETER UPRIGHTS 24" MINIMUM BELOW GRADE, 2" DIAMETER CROSS MEMBERS, DOOR FRAME MADE OUT OF 2" DIAMETER. FRAME TO BE COVERED WITH STEEL FENCING AND COLOR MATCHING SLATS ON BOTH SIDES, FRONT, DOOR, AND TOP (SUBMIT FOR FOR COLOR APPROVAL).

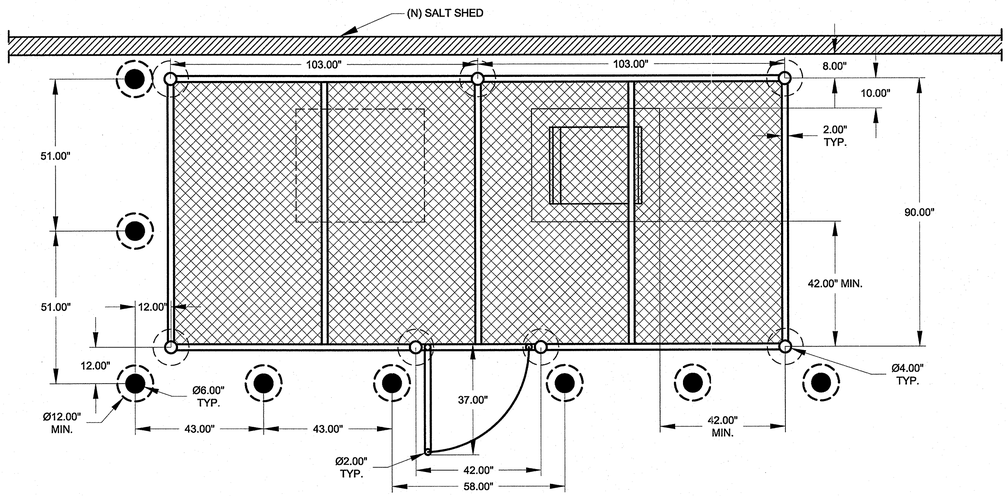

TOP ELEVATION

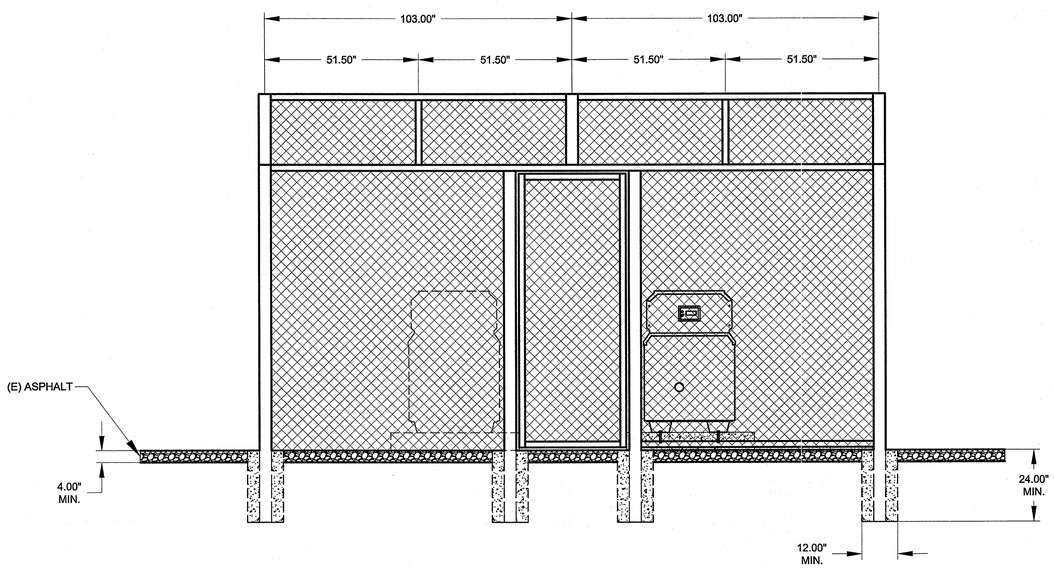

FRONT ELEVATION

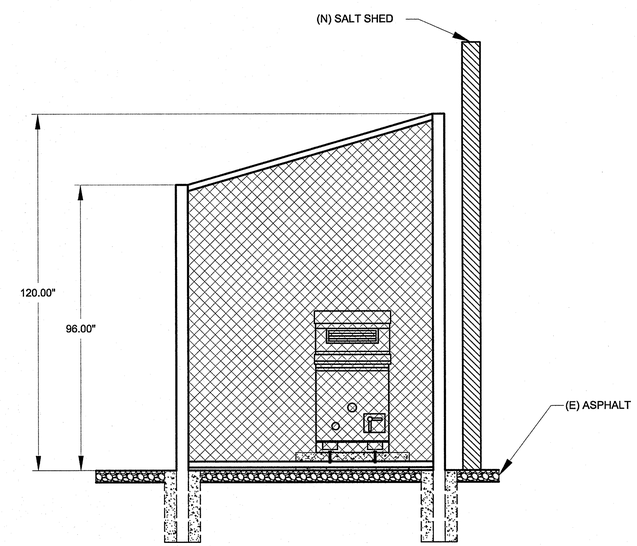

SIDE ELEVATION

SHADE STRUCTURE ELEVATIONS

1/2" = 1'-0"

NORTH

REV.	DATE	DESCRIPTION	BY	APP'D
1	02/28/2011	INITIAL DESIGN	JC	RC
2	04/06/2011	REVISION # 1	CG	RC
3	05/23/2011	REVISION # 2	CG	RC

CARSON CITY SALT/CINDER BUILDING AND SOLAR PHOTOVOLTAIC PROJECT
PROJECT No. 2.0821
SHADE STRUCTURE

SHEET
A1.0

CARSON CITY
PUBLIC WORKS DEPARTMENT
3505 BUTTI WAY CARSON CITY, NEVADA 89701
PH: 775-887-2355 FAX: 775-887-2112

PACIFICWEST
ENERGY SOLUTIONS
Certified Engineering Solutions
561 Keystone Ave. # 300, Reno, NV 89503
800-310-9080 Office / 800-310-9596 Fax

PROFESSIONAL ENGINEER - STATE OF NEVADA REGISTERED No. 9019 CITY OF RICHARD MARTINEZ Expires 12/31/2012

DESIGNED BY: RC
DRAWN BY: CG
CHECKED BY: RC
DWG NO.:
SCALE (HORIZ): AS SHOWN
SCALE (VERT): AS SHOWN
PLOT DATE: 06-10-2011

NOTES:

1. (8) 6" DIAMETER CONCRETE FILLED BOLLARDS 36" MIN. ABOVE AND BELOW GRADE.

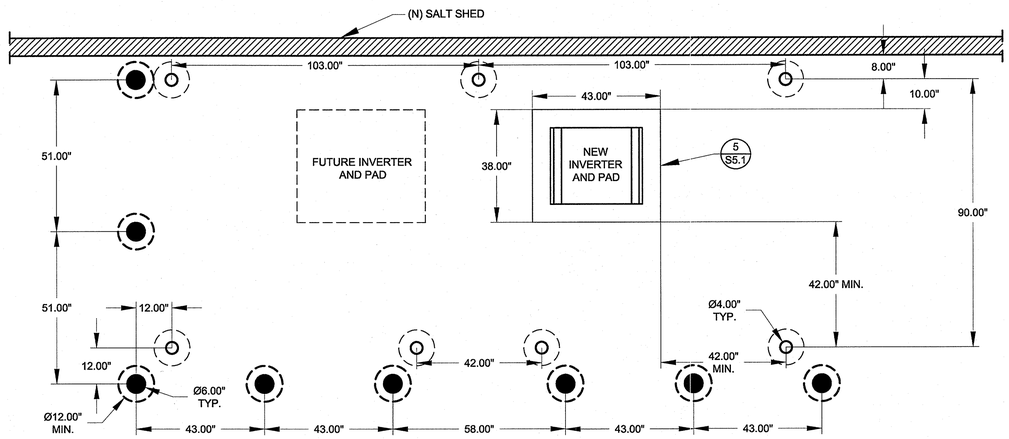

TOP ELEVATION

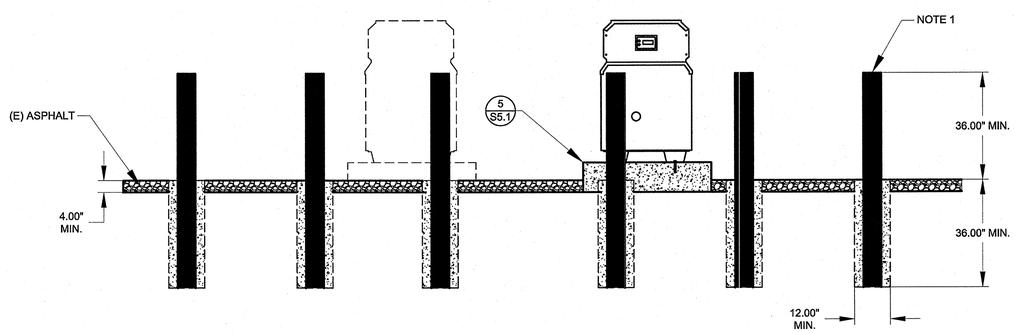

FRONT ELEVATION

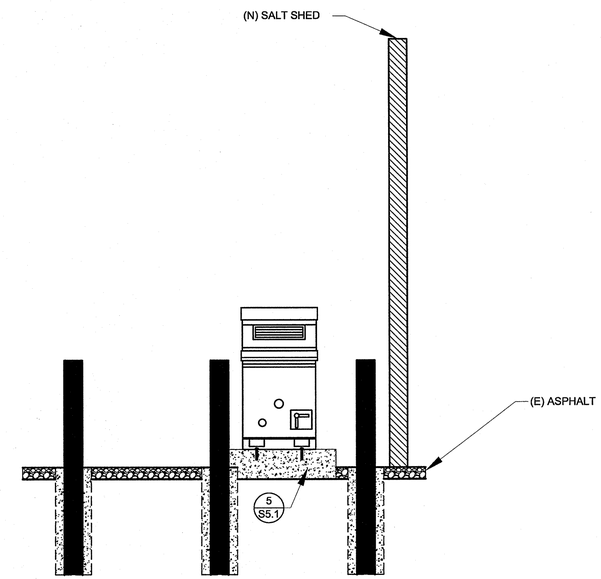

SIDE ELEVATION

BOLLARD ELEVATIONS

1/2" = 1'-0"

NORTH

DESIGNED BY:	RC
DRAWN BY:	CG
CHECKED BY:	RC
DWG NO.:	
SCALE (HORIZ):	AS SHOWN
SCALE (VERT):	AS SHOWN
PLOT DATE:	06-10-2011

CARSON CITY
PUBLIC WORKS DEPARTMENT
3505 BUTTI WAY CARSON CITY, NEVADA 89701
PH: 775-887-2355 FAX: 775-887-2112

PACIFICWEST
ENERGY SOLUTIONS
Consulting Engineers
561 Keystone Ave. # 300, Reno, NV 89503
800-310-9080 Office / 800-310-9596 Fax

REGISTERED PROFESSIONAL ENGINEER STATE OF NEVADA No. 16911 CHRISTOPHER GARRETT RICHARDS

REV	DATE	DESCRIPTION	BY	APP'D
1	02/28/2011	INITIAL DESIGN	JC	RC
2	04/06/2011	REVISION # 1	CG	RC
3	05/23/2011	REVISION # 2	CG	RC

CARSON CITY CORPORATE YARD
SALT/CINDER BUILDING AND SOLAR
PHOTOVOLTAIC PROJECT
PROJECT No. 2.0821
BOLLARD DETAILS

SHEET
A2.0

HYYTINEN ENGINEERING
5458 Longley Lane, Suite B
Reno, Nevada 89511
(775) 826-3019 PHONE
(775) 826-3076 FAX

LIST OF ABBREVIATIONS

AB	ANCHOR BOLT	DS	DEFORMED SHANK	GLB	GLUE-LAM BEAM	OSB	ORIENTED STRAND BOARD
ARCH	ARCHITECTURAL	DIA	DIAMETER	HDR	HEADER	PL	PLATE
L	ANGLE	DWL	DOWEL	HORIZ(H)	HORIZONTAL	PLYWD	PLYWOOD
BLDG	BUILDING	EXIST(E)	EXISTING	HSB	HIGH STRENGTH BOLT	PSL	PARALLAM®
BLKG	BLOCKING	EXP BT	EXPANSION BOLT	INT	INTERIOR	PT	PRESSURE TREATED
BM	BEAM	EF	EACH FACE	JST	JOIST	REINF	REINFORCEMENT
BOT(B)	BOTTOM	EL	ELEVATION (DATUM)	JT	JOINT	REQ'D	REQUIRED
CB	CARRIAGE BOLT	ELEV	ELEVATION (VIEW)	KS	KING STUD	SHG	SHEATHING
CTR	CENTER	EN	EDGE NAILING	LVL	MICROLLAM™	STD	STANDARD
CJ	CONSTRUCTION JOINT	ES	EACH SIDE	MAX	MAXIMUM	STIFF	STIFFENER
CCJ	CONTROL JOINT	EA	EACH	MB	MACHINE BOLTS	ST	STEEL
CMU	CONCRETE MASONRY UNIT	EW	EACH WAY	MIN	MINIMUM	SYM	SYMMETRICAL
CTSK	COUNTERSINK	EXT	EXTERIOR	MAS	MASONRY	T&B	TOP & BOTTOM
CLR	CLEAR	FIN	FINISH	MFR	MANUFACTURER	T.O.P.	TOP OF PLYWOOD
CONT	CONTINUOUS	FLR	FLOOR	MO	MASONRY OPENING	T.O.S.	TOP OF STEEL
COL	COLUMN	FOUND	FOUNDATION	MECH	MECHANICAL	TYP	TYPICAL
CONC	CONCRETE	FOS	FACE OF STUD	NS	NEAR SIDE	VERT(V)	VERTICAL
CONN	CONNECTION	FS	FAR SIDE	NTS	NOT TO SCALE	UNO	UNLESS NOTED OTHERWISE
CONSTR	CONSTRUCTION	FTG	FOOTING	OC	ON CENTER	WWF	WELDED WIRE FABRIC
CS	CRIPPLE STUD	GALV	GALVANIZED	OPNG	OPENING	w/	WITH

SHEET NOTES

1. IT SHALL BE THE CONTRACTORS DIRECT RESPONSIBILITY TO COMPLY WITH TYPICAL DETAILS AND GENERAL NOTES AS DELINEATED OR DEFINED ON THE TYPICAL DETAIL DRAWINGS OF THESE CONTRACT DOCUMENTS REGARDLESS OF SPECIFIC FLAGGING OR REFERENCE TO APPLICABLE NOTE OR DETAIL.
2. IT SHALL BE THE CONTRACTOR'S RESPONSIBILITY TO COORDINATE WITH ALL TRADES REGARDING UTILITIES PASSING THROUGH AND UNDER FOOTINGS. STRUCTURAL REQUIREMENTS FOR THESE CONDITIONS ARE DELINEATED IN TYPICAL DETAILS.
3. DRAWINGS ARE DIAGRAMMATIC IN NATURE AND ARE NOT INTENDED TO INDICATE EVERY OPENING OR PENETRATION IN ROOF OR OTHER STRUCTURE. CONTRACTOR SHALL COORDINATE AND VERIFY LOCATION AND SIZE OF ALL SUCH OPENINGS AND PENETRATIONS WITH RELATED SUB-CONTRACTORS PRIOR TO ROOF OR OTHER FRAMING LAYOUT OR CONSTRUCTION. CONTRACTOR SHALL THEN USE APPROPRIATE TYPICAL OR REFERENCED DETAIL(S) FOR EACH OPENING OR PENETRATION.
4. CONTRACTOR TO VERIFY WITH APPROPRIATE SUB-CONTRACTORS THE EXACT LOCATION, WEIGHT, AND INTENDED METHOD OF ATTACHMENT OF ALL ITEMS TO BE SUSPENDED FROM OR IN ANY WAY ATTACHED TO ANY ROOF FRAMING OR OTHER STRUCTURAL MEMBER UNLESS SUCH ITEM(S) ARE CLEARLY ADDRESSED BY THE STRUCURAL CONSTRUCTION DOCUMENTS. THIS INFORMATION SHALL BE TRANSMITTED IN WRITING TO THE APPROPRIATE FRAMING MANUFACTURER VIA THE STRUCTURAL ENGINEER PRIOR TO FINAL DESIGN OR FABRICATION OF STRUCTURAL FRAMING MEMBERS.
5. CONTRACTOR TO VERIFY DIMENSIONS WITH OWNER PRIOR TO CONSTRUCTION.
6. CONTRACTOR TO VERIFY ALL EXISTING CONDITIONS AND DIMENSIONS AND NOTIFY THE ENGINEER IN WRITING OF ANY DISCREPANCIES.
7. DO NOT SCALE DRAWINGS! DRAWINGS ARE DIAGRAMMATIC AND MAY NOT SCALE ACCURATELY. ANY DIMENSIONAL OMISSIONS OR DISCREPANCIES SHALL BE BROUGHT TO THE ATTENTION OF THE ENGINEER OF RECORD IMMEDIATELY.

BASIS OF DESIGN

CODE REFERENCE - 2006 INTERNATIONAL BUILDING CODE

LIVE LOADS	
Roof Snow Loads, S	23 psf
Roof Live Load, Lr	20 psf
Ground Snow Load	30 psf
Building Elevation	< 4,700 ft
Ce	0.90
Ct	1.20
Is	1.00

WIND LOADS	
Basic Wind Speed, v3s	100 mph
Exposure	C
Iw	1.0

SOILS	
2006 IBC Table 1804.2	Class 4 Materials Assumed
Maximum Allowable Soil Bearing	1500 psf
Coefficient of Friction	0.25
Passive Pressure	150 pcf
Frost Depth	24"

PRE-FABRICATED METAL BUILDINGS	
Collateral Loads	7psf (OVER FULL ROOF AREA)
Collateral load is in addition to structural dead loads. Collateral loads shall not be used to resist wind or seismic uplift.	
Lateral Drift	
The maximum lateral drift of the main building frames shall be 0.005 times the highest eave height for wind or seismic uplift.	
Note(s)	
* ICBO Report 4018 "Design Wind Load Criteria for Metal Building Systems" will NOT be allowed.	

SEISMIC LOADS	
Site Class	D
Ie	1.00
Ss	1.60
S1	0.60
Sds	1.07
Sd1	0.60
Seismic Design Category	D
Analysis Procedure Used	Per Metal Bldg. Mfr.
Basic Seismic Force Resisting System(s)	Per Metal Bldg. Mfr
Base Shear, V	Per Metal Bldg. Mfr.

PROJECT

STRUCTURAL DRAWINGS
FOR
CARSON CITY CORPORATE YARD SALT/CINDER BUILDING AND SOLAR PHOTOVOLTAIC PROJECT

PROJECT No. 2.0821
AT
Carson City Utilities Dept.
3505 Butti Way
Carson City, NV 89701

INDEX TO DRAWINGS

S0.1	PROJECT TITLE/BASIS OF DESIGN/INDEX TO DRAWINGS/ GENERAL NOTES/ABBREVIATIONS
S1.1	FLOOR PLAN
S1.2	ROOF PLAN
S2.1	FOUNDATION PLAN
S2.2	ROOF FRAMING PLAN
S3.1	BUILDING ELEVATIONS
S4.1	BUILDING SECTION AND DETAILS
S4.2	DETAILS
S5.1	SOLAR ARRAY PLAN AND DETAILS

VICINITY MAP

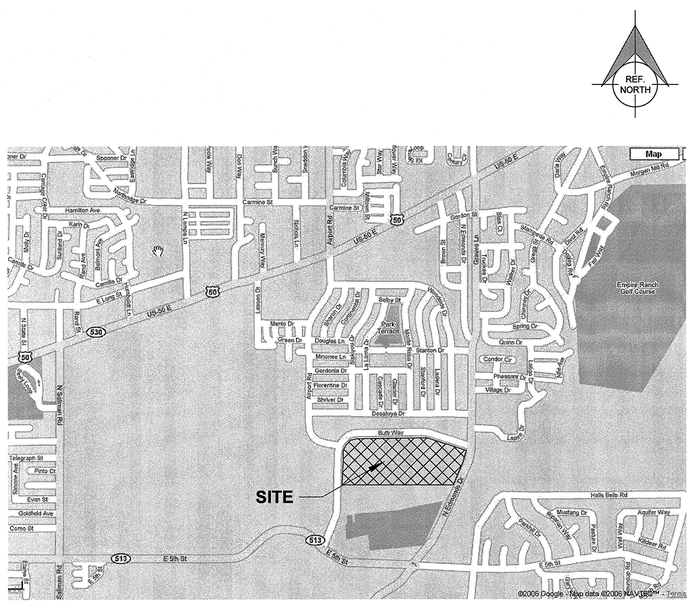

GENERAL NOTES

I. GENERAL

A. THE FOLLOWING GENERAL NOTES APPLY TO ALL STRUCTURAL DRAWINGS UNLESS NOTED OTHERWISE.

B. ALL PHASES OF WORK SHALL CONFORM TO THE MINIMUM STANDARDS OF THE 2006 INTERNATIONAL BUILDING CODE AND THE LATEST EDITION OF ASTM OR OTHER INDUSTRY STANDARDS REFERENCED.

C. THE CONTRACT STRUCTURAL DRAWINGS AND SPECIFICATIONS REPRESENT THE FINISHED STRUCTURE UNLESS OTHERWISE INDICATED; THEY DO NOT INDICATE THE METHOD OF CONSTRUCTION. THE CONTRACTOR SHALL PROVIDE ALL MEASURES NECESSARY TO PROTECT THE STRUCTURE, WORKMEN, AND OTHER PERSONS DURING CONSTRUCTION. SUCH MEASURES SHALL INCLUDE, BUT NOT BE LIMITED TO, PREPARING AND FOLLOWING A WRITTEN SAFETY PROGRAM FOR THE CONSTRUCTION PROJECT, BRACING, SHORING FOR CONSTRUCTION EQUIPMENT, SHORING FOR THE BUILDING, FORMS AND SCAFFOLDING, AND ALL RETAINING WALLS. THE CONTRACTOR SHALL COMPLY WITH ALL OSHA REGULATIONS AND RETAIN HIS OWN ENGINEER WHERE REQUIRED.

D. IN THE EVENT THAT CERTAIN FEATURES OF CONSTRUCTION ARE NOT FULLY SHOWN ON THE DRAWINGS OR CALLED FOR IN THE NOTES OR SPECIFICATIONS, THEIR CONSTRUCTION SHALL BE OF THE SAME CHARACTER AS FOR SIMILAR CONDITIONS THAT ARE SHOWN OR CALLED FOR AND SHALL BE REVIEWED BY THE ENGINEER.

E. IN THE EVENT THAT CERTAIN EXISTING CONDITIONS ARE FOUND TO BE DIFFERENT FROM THOSE SHOWN ON THE PLANS AND DETAILS, THE ENGINEER SHALL BE IMMEDIATELY NOTIFIED SO THAT THE PROPER REVISIONS CAN BE MADE IF NECESSARY.

F. NO CHANGES OR DEVIATIONS FROM THE PLANS AND SPECIFICATIONS WILL BE ALLOWED WITHOUT WRITTEN AUTHORIZATION FROM THE ENGINEER.

G. WHERE SHOP DRAWINGS ARE REQUIRED, THEY SHALL BE COMPLETE AND COORDINATED BY THE CONTRACTOR. REPRODUCTIONS OF CONTRACT DRAWINGS WILL NOT BE ACCEPTABLE.

H. OPENINGS, POCKETS, HOLES, CANS, ETC. SHALL NOT BE PLACED IN ANY SLAB, BEAM, COLUMN, WALL, OR OTHER STRUCTURAL MEMBER UNLESS SPECIFICALLY SHOWN ON THE DRAWINGS OR WRITTEN PERMISSION IS OBTAINED FROM THE ENGINEER.

II. FOUNDATION NOTES

A. FOUNDATION DESIGN ASSUMES THE PRESENCE OF ADEQUATE NATIVE SOILS. THE CONTRACTOR SHALL VERIFY THAT EXISTING SOILS ARE SUITABLE FOR THE PROPOSED IMPROVEMENTS AND SHALL NOTIFY THE ENGINEER IMMEDIATELY IF ANY DEFICIENCIES OR DISCREPANCIES ARE NOTED SO THAT APPROPRIATE MEASURES CAN BE TAKEN.

B. NATIVE MATERIALS, FILL AND BACKFILL SHALL BE REASONABLY WELL GRADED, FREE OF ORGANICS, WITH 100% PASSING THE 4" SIEVE, 70% TO 100% PASSING THE 3/4" SIEVE, 15% TO 65% PASSING THE #40 SIEVE AND 5% TO 20% PASSING THE #200 SIEVE. THE LIQUID LIMIT SHALL NOT EXCEED 35 AND THE PLASTIC INDEX SHALL NOT EXCEED 12.

C. STRIP SITE AS REQUIRED FOR IMPROVEMENTS. CLEAR ALL EXISTING STRUCTURES, DEBRIS, PAVING AND ORGANICS. THE CONTRACTOR SHALL TAKE CARE TO LOCATE ALL UTILITIES PRIOR TO CONSTRUCTION AND AVOID OR RE-LOCATE UTILITIES AS REQUIRED.

D. EXCAVATE AS NECESSARY TO PROPERLY CONSTRUCT IMPROVEMENTS.

E. SCARIFY, MOISTURE CONDITION, AND RE-COMPACT FOOTING SUB-GRADES TO 95% RELATIVE COMPACTION. PLACE FILL AND BACKFILL IN UNIFORM HORIZONTAL LIFTS OF 6" COMPACTED THICKNESS. MOISTURE CONDITION AND COMPACT TO 95% RELATIVE COMPACTION BELOW IMPROVEMENTS AND TO 90% RELATIVE COMPACTION OUTSIDE OF IMPROVEMENTS.

F. FOOTINGS SHALL BEAR NOT LESS THAN 24" BELOW FINISHED GRADE.

G. FOOTINGS MAY BE POURED IN NEAT EXCAVATION WHERE POSSIBLE, PROVIDED AN EXTRA 1" WIDTH OF FOOTING IS PROVIDED ON EACH SIDE.

H. ALL FOOTING EXCAVATIONS SHALL BE HAND CLEANED PRIOR TO PLACING CONCRETE.

I. CONCRETE FLATWORK SHALL BE PLACED OVER 6" COMPACT, TYPE II AGGREGATE BASE. COMPACT AGGREGATE BASE TO 95% RELATIVE COMPACTION.

J. TRENCHING AND BACKFILL FOR UTILITIES SHALL COMPLY WITH THE REQUIREMENTS OF THE AUTHORITIES HAVING JURISDICTION AND WITH ALL BEST INDUSTRY PRACTICES.

III. CONCRETE NOTES

A. ALL CONCRETE WORK SHALL CONFORM TO THE REQUIREMENTS OF THE ACI MANUAL OF CONCRETE PRACTICE.

B. ALL CONCRETE SHALL BE DESIGNATED AS EXTERIOR CONCRETE AND SHALL HAVE A MINIMUM COMPRESSIVE STRENGTH OF 4000 PSI AT 28 DAYS, SHALL HAVE A MAXIMUM WATER TO CEMENT RATIO OF 0.45, SHALL HAVE AN ENTRAINED AIR CONTENT OF 5% TO 7%, AND SHALL CONTAIN 1.5 LB/CY OF FIBERMESH STEALTH POLYPROPYLENE FIBERS OR APPROVED EQUAL.

C. ALL CONCRETE MIXES SHALL UTILIZE TYPE II LOW ALKALI CEMENT CONFORMING TO ASTM C150. HARDROCK AGGREGATE SHALL CONFORM TO ASTM C33. COURSE AGGREGATE GRADATION SHALL MEET THE REQUIREMENTS OF SIZE NO. 67 UNLESS NOTED OTHERWISE.

D. CONCRETE SLUMP SHALL NOT EXCEED 3" WHEN TESTED IN ACCORDANCE WITH ASTM C143 FOR FOOTINGS, SLABS, BEAMS AND GIRDERS OR 4" FOR CAST-IN-PLACE WALLS AND COLUMNS. SLUMP INDICATED IS WITH WATER ONLY. ADDITIONAL SLUMP IS ACCEPTABLE IF ADDED BY MEANS OF APPROVED ADDITIVES THAT DO NOT INCREASE SHRINKAGE OR ADVERSELY AFFECT THE CONCRETE.

E. NON-SHRINK GROUT OR DRY PACK SHALL BE A PREMIXED, NONMETALLIC FORMULA WITH A MINIMUM COMPRESSIVE STRENGTH OF 7000 PSI AT 28 DAYS AND HAVING THE FOLLOWING CHARACTERISTICS: NO SHRINKAGE AFTER PLACEMENT OR EXPANSION AFTER SET (ASTM C1090), ONE DAY COMPRESSIVE STRENGTH OF AT LEAST 3000 PSI (ASTM C109) AND INITIAL SET TIME OF NOT LESS THAN 45 MINUTES (ASTM C191). PROVIDE "HI-FLOW GROUT" OR "DRY PACK GROUT" BY EUCLID, OR AN APPROVED EQUAL.

F. REINFORCING SHALL BE DEFORMED BARS CONFORMING TO ASTM A615, GRADE 60. ALL REINFORCING TO BE WELDED OR FIELD BENT SHALL CONFORM TO ASTM A706. SUPPORTS AND ACCESSORIES SHALL BE FURNISHED AS SHOWN OR REQUIRED. CHAIRS PLACED AGAINST EXPOSED SURFACES SHALL BE GALVANIZED OR PROVIDED WITH PLASTIC FEET.

G. MINIMUM COVERAGE FOR REINFORCING SHALL BE THE CLEAR DISTANCE TO THE FACE OF BARS AS FOLLOWS: 3" FOR CONCRETE CAST AGAINST AND PERMANENTLY EXPOSED TO EARTH; 2" FOR #6 AND LARGER BARS FROM FORMED SURFACES EXPOSED TO EARTH OR WEATHER (1 1/2" FOR #5 AND SMALLER).

H. ALL REINFORCING STEEL SHALL BE ACCURATELY POSITIONED AND SECURED IN PLACE WITH CHAIRS, TIES, BOLSTERS OR DOBIES PRIOR TO PLACEMENT OF CONCRETE AS RECOMMENDED IN THE CRSI MANUAL OF STANDARD PRACTICE.

I. SPLICES IN REINFORCEMENT SHALL NOT BE MADE AT OR NEAR POINTS OF MAXIMUM STRESS. SPLICES SHALL BE LAPPED NOT LESS THAN 48 DIAMETERS. IN NO CASE SHALL A SPLICE BE LESS THAN 18".

J. CONCRETE FORMWORK SHALL CONFORM TO ACI 347. CLEAN AND ROUGHEN CONSTRUCTION JOINTS AND LIGHTLY MOISTEN FORMS AND SUBGRADE PRIOR TO PLACEMENT OF CONCRETE. INSTALL W.R. MEADOWS, INC. "SEALTIGHT DUOGARD" CHEMICAL RELEASE AGENT OR APPROVED EQUAL PRIOR TO PLACEMENT OF CONCRETE. PLACE CONCRETE USING METHODS WHICH AVOID SEGREGATION. MECHANICALLY VIBRATE ALL CONCRETE, INCLUDING FLOOR SLABS, TO CONSOLIDATE IT IN FORMS.

K. FINISH CONCRETE AS FOLLOWS UNLESS NOTED OTHERWISE: INTERIOR FLATWORK SHALL RECEIVE A STEEL TROWELED FINISH, EXTERIOR FLATWORK SHALL RECEIVE A MEDIUM BROOM FINISH PERPENDICULAR TO TRAFFIC, SACK AND PATCH FORMED CONCRETE EXPOSED TO VIEW FOR A SMOOTH FINISH, PATCH LARGE HOLES OR DEFECTS AT FORMED CONCRETE NOT EXPOSED TO VIEW. FRESHLY PLACED CONCRETE SHALL BE CURED AND PROTECTED FROM THE WEATHER IN ACCORDANCE WITH ACI 305 IN HOT WEATHER AND ACI 306 IN COLD WEATHER.

L. ALL CONCRETE EDGES, CORNERS AND INTERSECTIONS SHALL BE TOOLED OR CHAMFERED NO LESS THAN 3/4" WHETHER SHOWN ON THE DRAWINGS OR NOT.

M. CONSTRUCTION JOINTS WILL NOT BE PERMITTED, EXCEPT AS SHOWN ON THE DRAWINGS, WITHOUT WRITTEN CONSENT OF THE ENGINEER.

N. CONCRETE MIX DESIGNS IN ACCORDANCE WITH ASTM C94 SHALL BE SUBMITTED TO THE ENGINEER FOR APPROVAL PRIOR TO PLACEMENT OF ANY CONCRETE. SHOP DRAWINGS OF REINFORCING STEEL SHALL BE SUBMITTED TO THE ENGINEER FOR APPROVAL PRIOR TO ANY FABRICATION.

IV. PRE-ENGINEERED METAL BUILDING NOTES

A. THE PRE-ENGINEERED METAL BUILDING SYSTEM SHALL BE DESIGNED BY THE METAL BUILDING MANUFACTURER FOR THE DESIGN LOADS AND ALLOWABLE FRAME DRIFTS SHOWN ON THE DRAWINGS. ICBO REPORT 4018 "DESIGN WIND LOAD CRITERIA FOR METAL BUILDING SYSTEMS" WILL NOT BE ALLOWED.

B. THE METAL BUILDING SYSTEM SHALL BE COORDINATED WITH THE SPECIFICATIONS AND DRAWINGS TO ENSURE PROPER COORDINATION OF THE BUILDING AS A WHOLE.

C. SPECIAL ATTENTION SHALL BE GIVEN TO THE METAL BUILDING SYSTEM TO ENSURE THAT PROPER COORDINATION IS MADE FOR ALL MECHANICAL, PLUMBING, ELECTRICAL AND FIRE SUPPRESSION SYSTEM ELEMENTS SUCH AS UNIT SIZES, WEIGHTS, LOCATIONS, DUCTS, PIPES, CONDUITS, ETC. ALL METAL BUILDING ITEMS SHALL BE DETAILED AS REQUIRED TO ENSURE THE PROPER COORDINATION WITH THE ARCHITECTURAL LAYOUT, DOORS, WALL OPENINGS, WALL SURFACES, ETC.

D. COMPLETE SHOP DRAWINGS INCLUDING FRAMING PLANS, ELEVATIONS, SECTIONS, DETAILS, STRUCTURAL CALCULATIONS FOR ALL BUILDING ELEMENTS, COLUMN REACTIONS, COLUMN BASE DETAILS, AND OTHER REQUIRED DRAWINGS SHALL BE STAMPED BY A LICENSED NEVADA CIVIL OR STRUCTURAL ENGINEER AND SHALL BE SUBMITTED TO THE ENGINEER OF RECORD FOR APPROVAL.

E. FOOTING SIZES AND REINFORCEMENT ARE FOR BIDDING PURPOSES ONLY. FINAL SIZES AND REINFORCEMENT WILL BE DETERMINED WHEN SUCCESSFUL BUILDING MANUFACTURER'S COLUMN REACTIONS ARE SUBMITTED. BIDS SHALL INCLUDE UNIT PRICES TO BE USED IF ANY ADJUSTMENTS ARE REQUIRED.

V. POST-INSTALLED ANCHORS

A. EXPANSION ANCHORS IN CONCRETE OR MASONRY SHALL BE ITW RAMSET/REDHEAD "TRUBOLT+" WEDGE ANCHORS PER ICC REPORT ESR-2427, OR APPROVED EQUAL. SPECIAL INSPECTION REQUIRED.

B. EPOXY/ADHESIVE ANCHORS SHALL USE SIMPSON "SET-XP" EPOXY PER ICC-ES REPORT ESR-2508 (IN CONCRETE) OR SIMPSON "SET" EPOXY PER ICC-ES REPORT ESR-1772 (IN MASONRY), OR APPROVED EQUAL. SPECIAL INSPECTION REQUIRED.

C. HEAVY DUTY SCREW ANCHORS SHALL BE SIMPSON "TITEN HD" PER ICC-ES REPORT ESR-2713 (IN CONCRETE) OR ESR-1056 (IN MASONRY), OR APPROVED EQUAL. SPECIAL INSPECTION REQUIRED.

D. ANCHORS SHALL BE INSTALLED IN ACCORDANCE WITH ALL EVALUATION REPORT AND MANUFACTURER RECOMMENDATIONS AND SPECIAL INSPECTION SHALL BE PROVIDED WHERE REQUIRED.

E. WHERE POST INSTALLED ANCHORS ARE TO BE USED, IT SHALL BE THE CONTRACTOR'S DIRECT RESPONSIBILITY TO COORDINATE THE LOCATIONS OF REINFORCING STEEL OR OTHER SIMILARLY EMBEDDED ITEMS TO WORK WITH POST INSTALLED ANCHORS AND TO AVOID CONFLICTS WHEN DRILLING HOLES.

VI. SPECIAL INSPECTION

A. SPECIAL INSPECTION AND ASSOCIATED MATERIALS TESTING SHALL BE PERFORMED BY AN AGENCY DESIGNATED BY THE OWNER FOR THE PROCESSES AND MATERIALS REQUIRED FOR CONSTRUCTION. THE TYPE AND FREQUENCY OF SPECIAL INSPECTIONS AND MATERIALS TESTING AS WELL AS THE FREQUENCY AND DISTRIBUTION OF RELATED REPORTS SHALL BE AS INDICATED IN THE CONSTRUCTION DOCUMENTS AND AS REQUIRED BY ALL APPLICABLE CODES.

B. THE SPECIAL INSPECTOR SHALL OBSERVE THE WORK FOR COMPLIANCE WITH THE CONSTRUCTION DOCUMENTS. THE SPECIAL INSPECTOR SHALL FURNISH INSPECTION REPORTS TO THE ENGINEER, OWNER AND BUILDING OFFICIAL. ALL DISCREPANCIES SHALL BE BROUGHT TO THE IMMEDIATE ATTENTION OF THE CONTRACTOR FOR CORRECTION, THEN IF UNCORRECTED, TO THE ENGINEER, OWNER AND BUILDING OFFICIAL. AT THE CONCLUSION OF WORK, THE SPECIAL INSPECTOR SHALL SUBMIT A FINAL REPORT TO THE ENGINEER, OWNER AND BUILDING OFFICIAL INDICATING THE WORK REQUIRING SPECIAL INSPECTION WAS INSPECTED AND IS IN CONFORMANCE WITH THE CONSTRUCTION DOCUMENTS AND THAT ALL DISCREPANCIES NOTED IN THE INSPECTION REPORTS HAVE BEEN CORRECTED.

C. SPECIAL INSPECTIONS IN ACCORDANCE WITH 2006 IBC CHAPTER 17 SHALL BE REQUIRED FOR THE FOLLOWING STRUCTURAL ITEMS:

1. CONCRETE CONSTRUCTION IN ACCORDANCE WITH 2006 IBC TABLE 1704.4.
2. SOILS IN ACCORDANCE WITH 2006 IBC TABLE 1704.7.
3. POST INSTALLED ANCHORS IN ACCORDANCE WITH EVALUATION REPORTS AND MANUFACTURER RECOMMENDATIONS.
4. STEEL CONSTRUCTION IN ACCORDANCE WITH IBC 2006 TABLE 1704.3

D. THE SPECIAL INSPECTIONS LISTED ABOVE ARE NOT INTENDED TO BE ALL INCLUSIVE AND ONLY REPRESENT SPECIAL INSPECTIONS FOR STRUCTURAL PORTIONS OF THE WORK. ADDITIONAL SPECIAL INSPECTIONS OF ARCHITECTURAL, MECHANICAL, ELECTRICAL, PLUMBING OR OTHER SYSTEMS MAY BE REQUIRED. REFER TO THE APPROPRIATE DESIGN DISCIPLINES FOR ADDITIONAL INFORMATION.

DESIGNED BY: CR
DRAWN BY: NVGI
CHECKED BY: CR
DWG NO.:
SCALE (HORIZ): AS NOTED
SCALE (VERT): AS NOTED
PLOT DATE: 06-10-2011

CARSON CITY
PUBLIC WORKS DEPARTMENT
3505 BUTTI WAY CARSON CITY, NEVADA 89701
PH: 775-887-2355 FAX: 775-887-2112

PACIFICWEST
ENERGY SOLUTIONS
Conservation, Generation, Innovation
561 Keystone Ave., # 300, Reno, NV 89503
(800) 310-9080 Office / (800) 310-9386 Fax

PROFESSIONAL ENGINEER - STATE OF NEVADA
CHRISTOPHER M. ROPER
EXP. 12-31-11
CIVIL & STRUCTURAL
No. 15032
6/10/11

REV.	DATE	DESCRIPTION	BY	APP'D

CARSON CITY CORPORATE YARD
SALT/CINDER BUILDING AND SOLAR
PHOTOVOLTAIC PROJECT
PROJECT No. 2.0821
PROJECT TITLE/BASIS OF DESIGN/INDEX
/GENERAL NOTES/ABBREVIATIONS

SHEET
S0.1

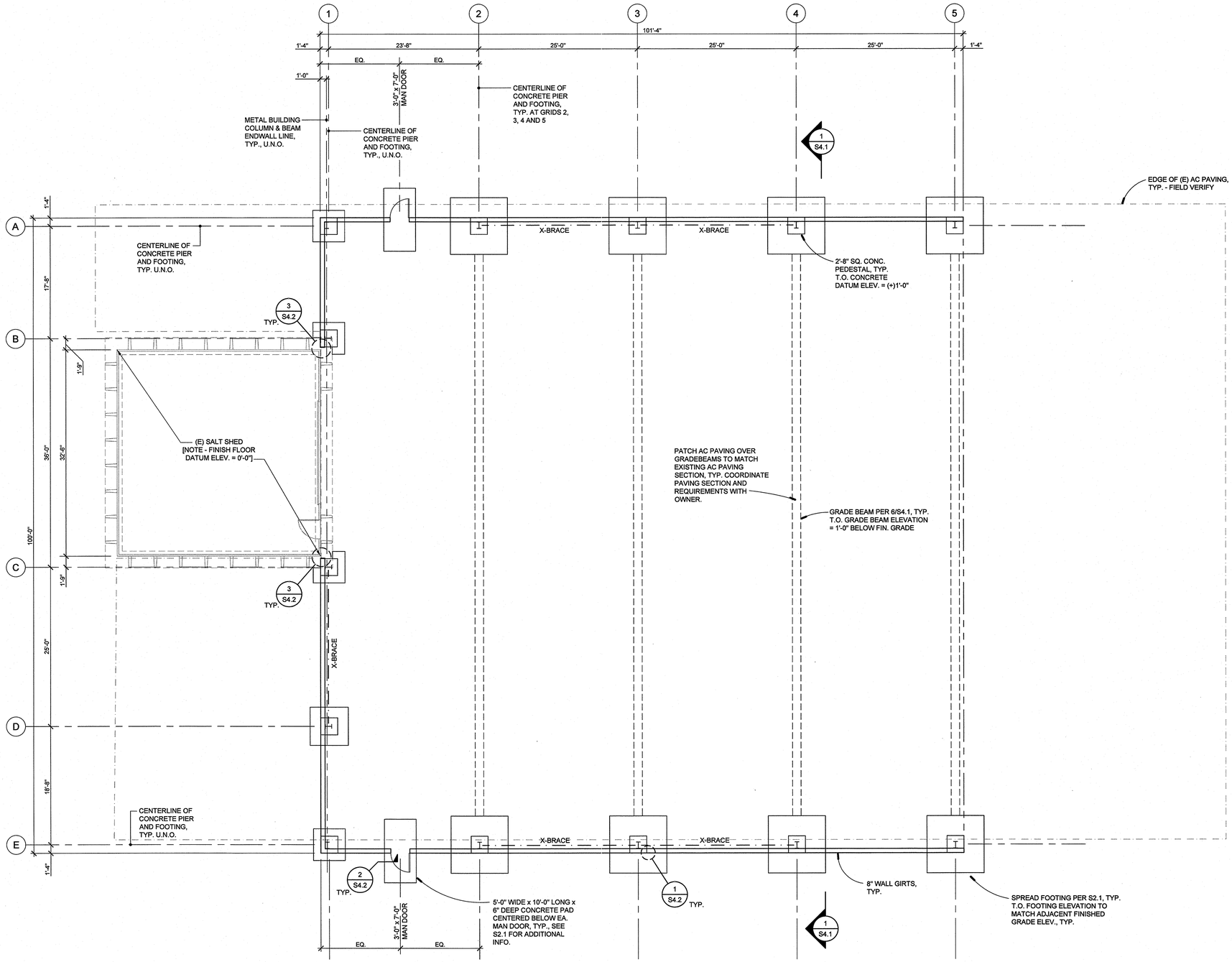

FLOOR PLAN

1/8" = 1'-0"

REF. NORTH

HYYTINEN ENGINEERING
5458 Longley Lane, Suite B
Reno, Nevada 89511
(775) 826-3019 PHONE
(775) 826-3076 FAX

DESIGNED BY: CR
DRAWN BY: NVGI
CHECKED BY: CR
DWG NO.:
SCALE (HORIZ): AS NOTED
SCALE (VERT): AS NOTED
PLOT DATE: 06-10-2011

CARSON CITY
PUBLIC WORKS DEPARTMENT
3505 BUTTI WAY CARSON CITY, NEVADA 89701
PH: 775-887-2355 FAX: 775-887-2112

PACIFICWEST
ENERGY SOLUTIONS
Construction | Generation | Innovation
561 Keystone Ave., # 300, Reno, NV 89503
(800) 310-9080 Office / (800) 310-9586 Fax

PROFESSIONAL ENGINEER - STATE OF NEVADA
CHRISTOPHER M. ROPER
EXP. 12-31-11
CIVIL & STRUCTURAL
No. 15032
6/10/11

REV.	DATE	DESCRIPTION	BY	APP'D

CARSON CITY CORPORATE YARD
SALT/CINDER BUILDING AND SOLAR
PHOTOVOLTAIC PROJECT
PROJECT No. 2.0821

FLOOR PLAN

SHEET
S1.1

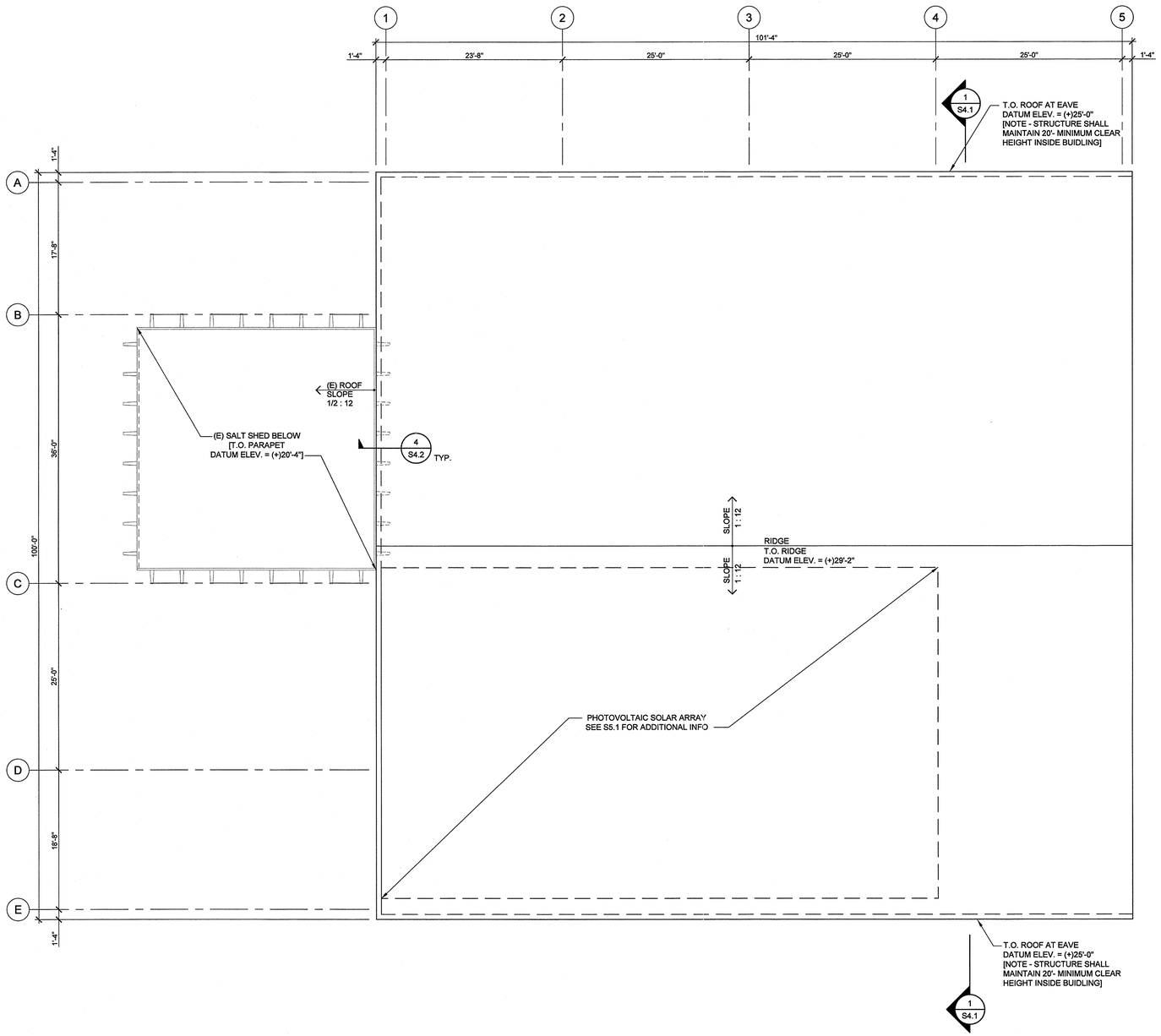

ROOF PLAN

1/8" = 1'-0"

HYYTINEN ENGINEERING
5458 Longley Lane, Suite B
Reno, Nevada 89511
(775) 826-3019 PHONE
(775) 826-3076 FAX

DESIGNED BY: CR
DRAWN BY: NVGI
CHECKED BY: CR
DWG NO.:
SCALE (HORIZ): AS NOTED
SCALE (VERT): AS NOTED
PLOT DATE: 06-10-2011

CARSON CITY
PUBLIC WORKS DEPARTMENT
3505 BUTTI WAY CARSON CITY, NEVADA 89701
PH: 775-887-2355 FAX: 775-887-2112

PACIFICWEST
ENERGY SOLUTIONS
Construction | Generation | Innovation
561 Keystone Ave., # 300, Reno, NV 89503
(800) 310-9080 Office / (800) 310-9586 Fax

PROFESSIONAL ENGINEER - STATE OF NEVADA
CHRISTOPHER M. ROPER
EXP. 12-31-11
CIVIL & STRUCTURAL
No. 15032
6/10/11

REV.	DATE	DESCRIPTION	BY	APP'D

CARSON CITY CORPORATE YARD
SALT/CINDER BUILDING AND SOLAR
PHOTOVOLTAIC PROJECT
PROJECT No. 2.0821

ROOF PLAN

SHEET
S1.2

HYYTINEN ENGINEERING
5458 Longley Lane, Suite B
Reno, Nevada 89511
(775) 826-3019 PHONE
(775) 826-3076 FAX

SPREAD FOOTING SCHEDULE			
MARK	SIZE	REINFORCING	NOTES
F5	5'-0" SQ. x 3'-0" DP	(5) #6 EA. WAY, T&B	
F6	6'-0" SQ. x 4'-0" DP	(6) #7 EA WAY, T&B	
F9	9'-0" SQ. x 4'-0" DP	(9) #7 EA WAY, T&B	

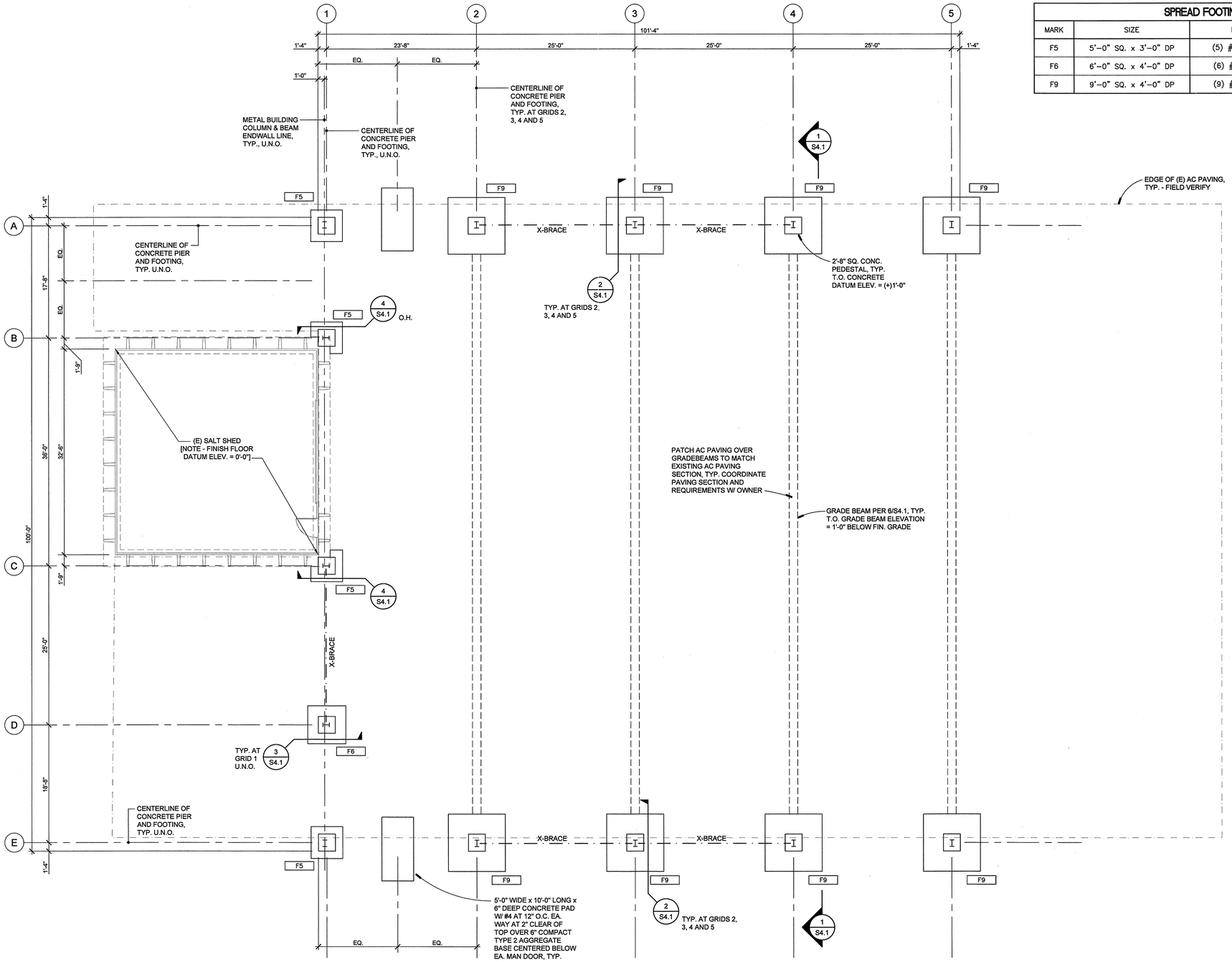

LEGEND

F5 — FOOTING PER SCHEDULE

FOUNDATION PLAN

1/8" = 1'-0"

REF. NORTH

DESIGNED BY: CR
DRAWN BY: NVGI
CHECKED BY: CR
DWG NO.:
SCALE (HORIZ): AS NOTED
SCALE (VERT): AS NOTED
PLOT DATE: 06-10-2011

CARSON CITY
PUBLIC WORKS DEPARTMENT
3505 BUTTI WAY CARSON CITY, NEVADA 89701
PH: 775-887-2355 FAX: 775-887-2112

PACIFICWEST
ENERGY SOLUTIONS
Contractor's License No. 0077877
561 Keystone Ave., # 300, Reno, NV 89503
(800) 310-9080 Office / (800) 310-9595 Fax

PROFESSIONAL ENGINEER — STATE OF NEVADA
CHRISTOPHER M. ROPER
EXP. 12-31-11
CIVIL & STRUCTURAL
No. 15032
6/10/11

REV.	DATE	DESCRIPTION	BY	APP'D

CARSON CITY CORPORATE YARD
SALT/CINDER BUILDING AND SOLAR
PHOTOVOLTAIC PROJECT
PROJECT No. 2.0821

FOUNDATION PLAN

SHEET
S2.1

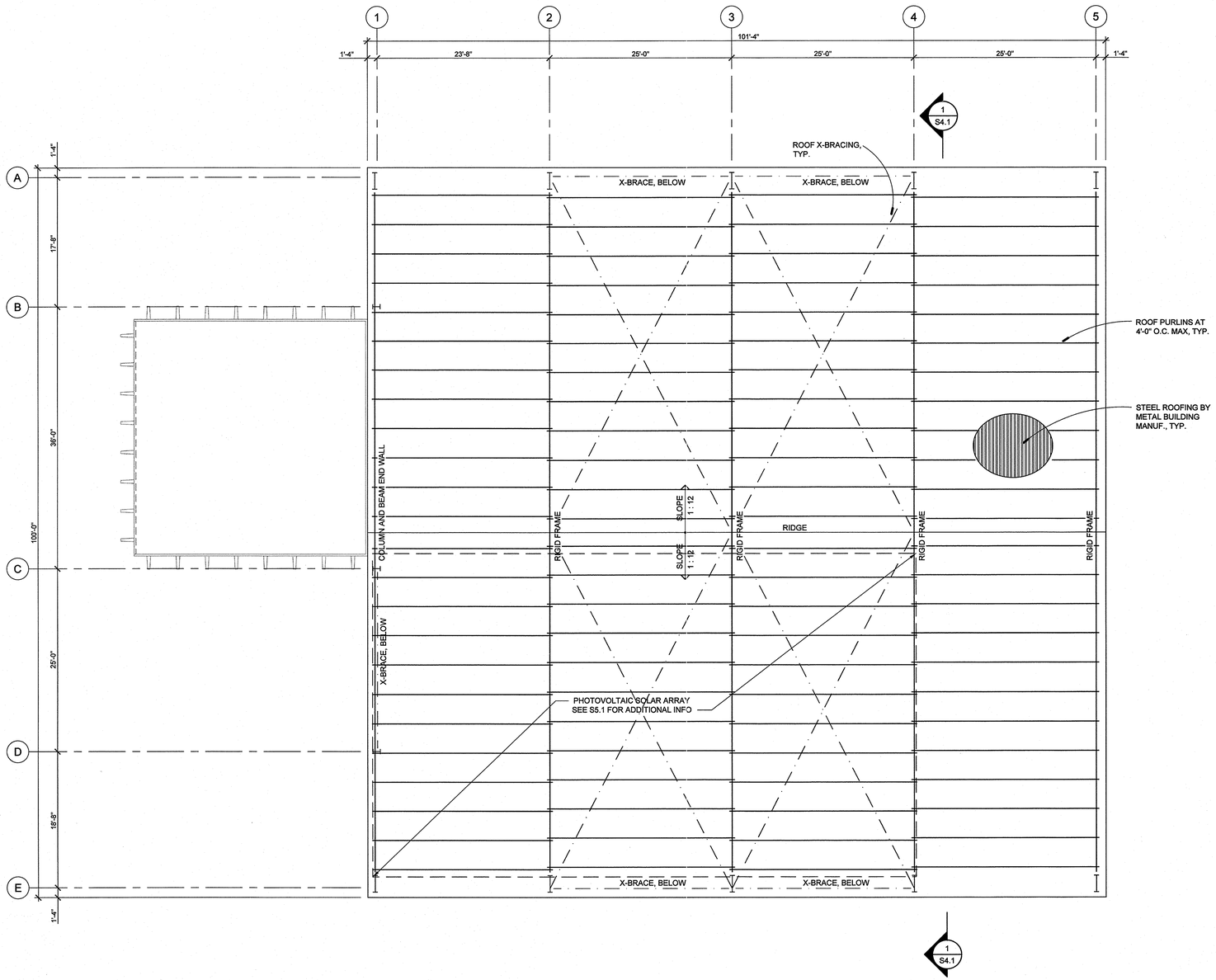

ROOF FRAMING PLAN
1/8" = 1'-0"

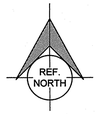

HYYTINEN ENGINEERING
5458 Longley Lane, Suite B
Reno, Nevada 89511
(775) 826-3019 PHONE
(775) 826-3076 FAX

DESIGNED BY: CR
DRAWN BY: NVGI
CHECKED BY: CR
DWG NO.:
SCALE (HORIZ): AS NOTED
SCALE (VERT): AS NOTED
PLOT DATE: 06-10-2011

CARSON CITY
PUBLIC WORKS DEPARTMENT
3505 BUTTI WAY CARSON CITY, NEVADA 89701
PH: 775-887-2355 FAX: 775-887-2112

PACIFICWEST
ENERGY SOLUTIONS
Construction | Generation | Innovation
561 Keystone Ave., # 300, Reno, NV 89503
(800) 310-9080 Office / (800) 310-9586 Fax

PROFESSIONAL ENGINEER - STATE OF NEVADA
CHRISTOPHER M. ROPER
EXP. 12-31-11
CIVIL & STRUCTURAL
No. 15032
6/10/11

REV.	DATE	DESCRIPTION	BY	APP'D

CARSON CITY CORPORATE YARD
SALT/CINDER BUILDING AND SOLAR
PHOTOVOLTAIC PROJECT
PROJECT No. 2.0821

ROOF FRAMING PLAN

SHEET
S2.2

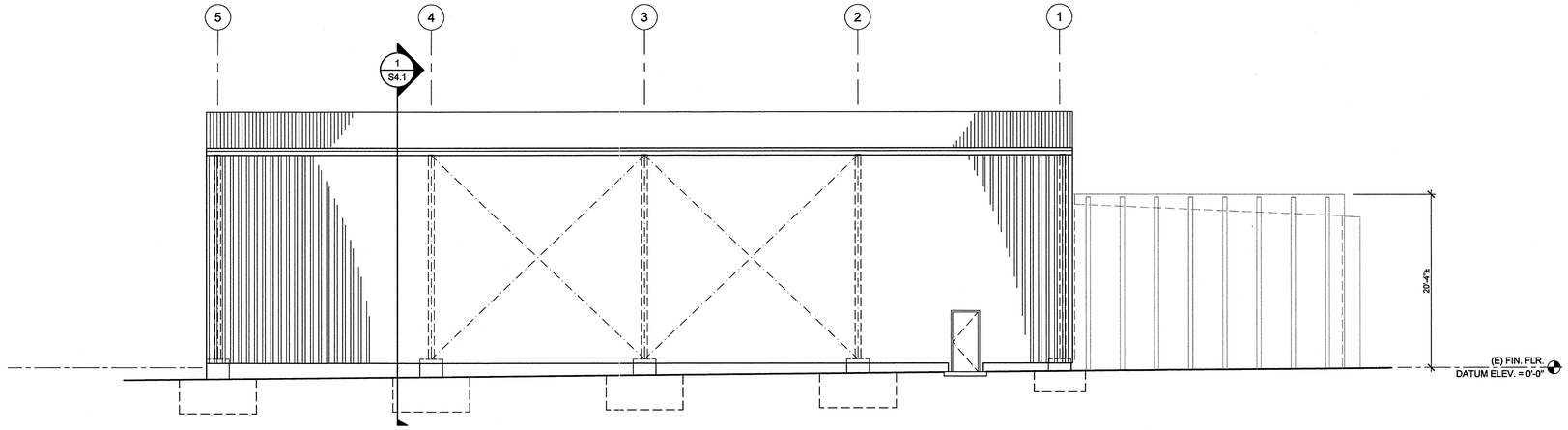

NORTH ELEVATION
1/8" = 1'-0"

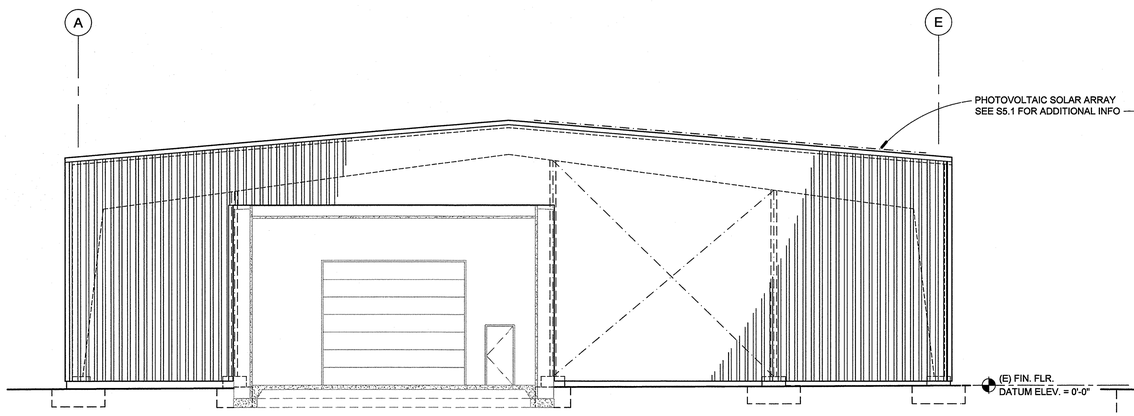

WEST ELEVATION
1/8" = 1'-0"

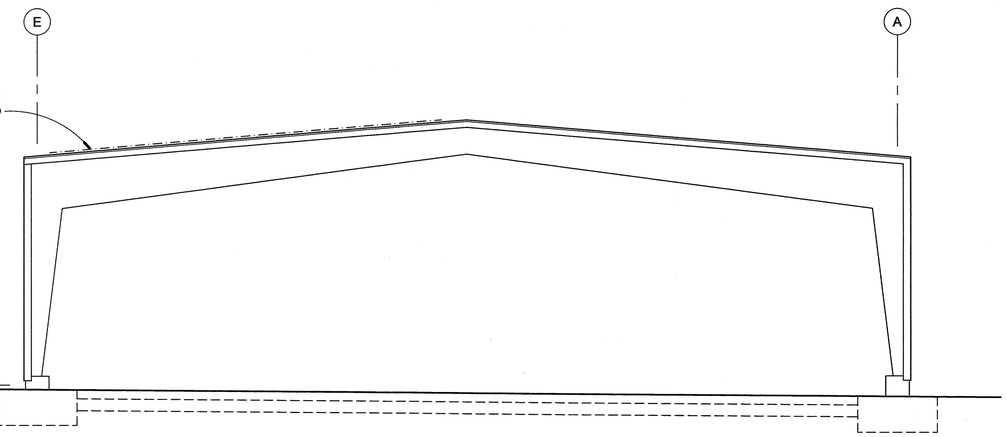

EAST ELEVATION
1/8" = 1'-0"

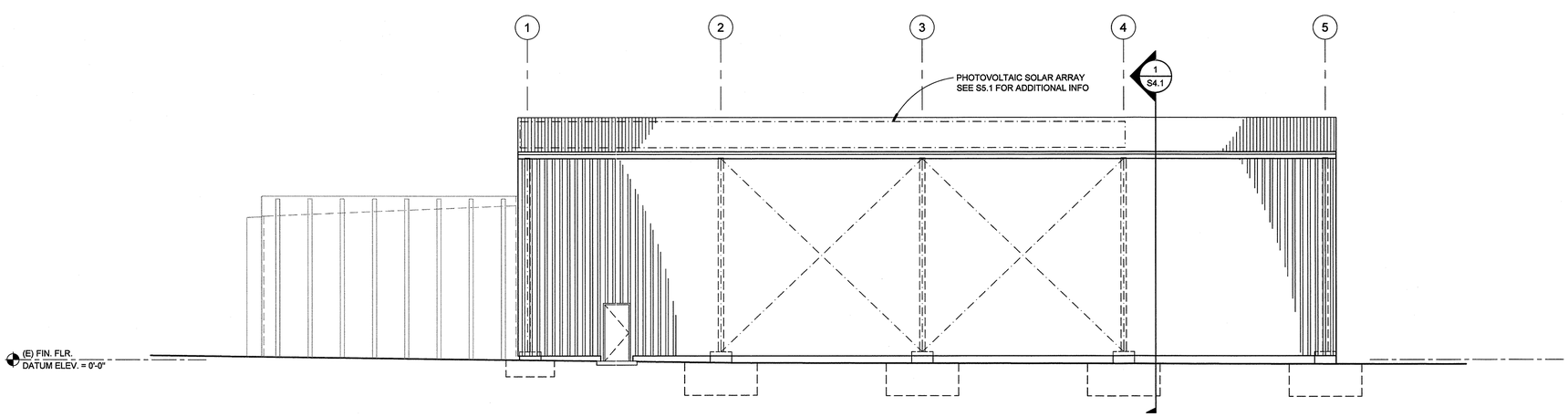

SOUTH ELEVATION
1/8" = 1'-0"

HYYTINEN ENGINEERING
5458 Longley Lane, Suite B
Reno, Nevada 89511
(775) 826-3019 PHONE
(775) 826-3076 FAX

DESIGNED BY: CR
DRAWN BY: NVGI
CHECKED BY: CR
DWG NO.:
SCALE (HORIZ): AS NOTED
SCALE (VERT): AS NOTED
PLOT DATE: 06-10-2011

CARSON CITY
PUBLIC WORKS DEPARTMENT
3505 BUTTI WAY CARSON CITY, NEVADA 89701
PH: 775-887-2355 FAX: 775-887-2112

PACIFICWEST
ENERGY SOLUTIONS
Construction, Generation, Innovation
561 Keystone Ave., # 300, Reno, NV 89503
(800) 310-8080 Office / (800) 310-8986 Fax

PROFESSIONAL ENGINEER - STATE OF NEVADA
CHRISTOPHER M. ROPER
EXP. 12-31-11
CIVIL & STRUCTURAL
No. 19031
6/16/11

REV.	DATE	DESCRIPTION	BY	APP'D

CARSON CITY CORPORATE YARD
SALT/CINDER BUILDING AND SOLAR
PHOTOVOLTAIC PROJECT
PROJECT No. 2.0821

BUILDING ELEVATIONS

SHEET
S3.1

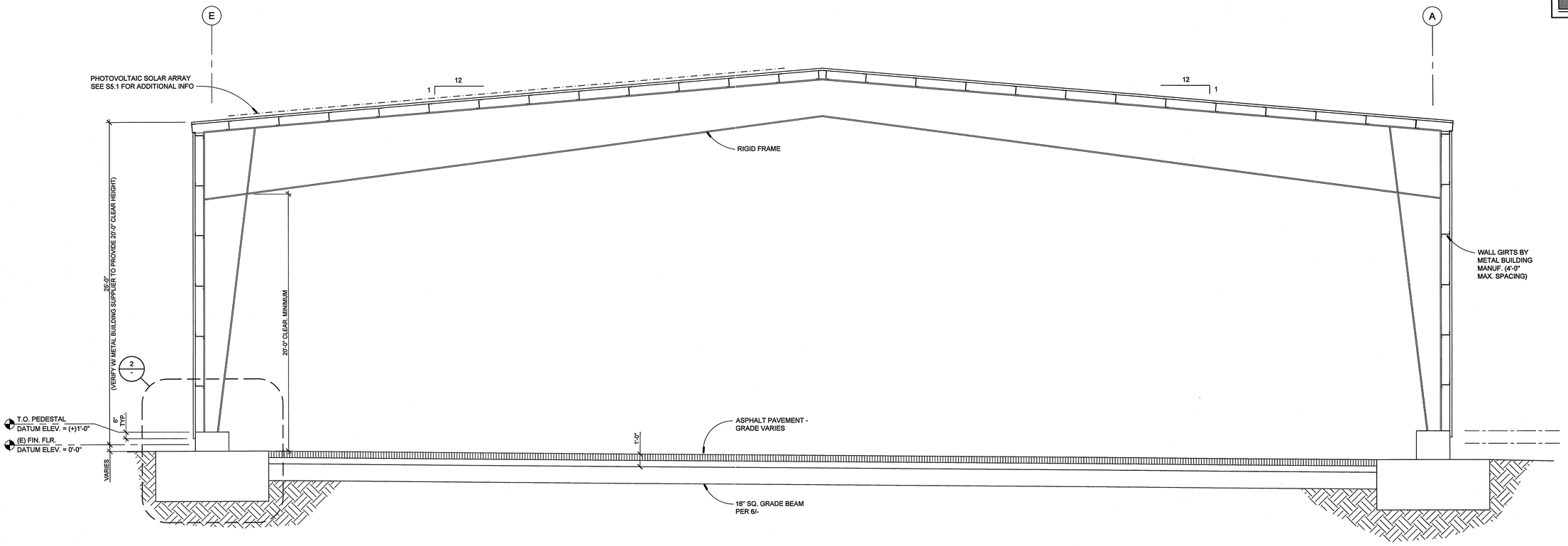

1 S4.1 BUILDING SECTION

1/4" = 1'-0"

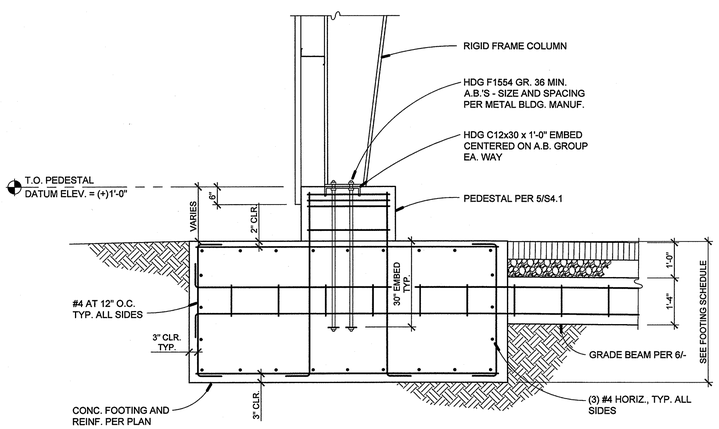

2 S4.1 FOOTING SECTION

1/2" = 1'-0"

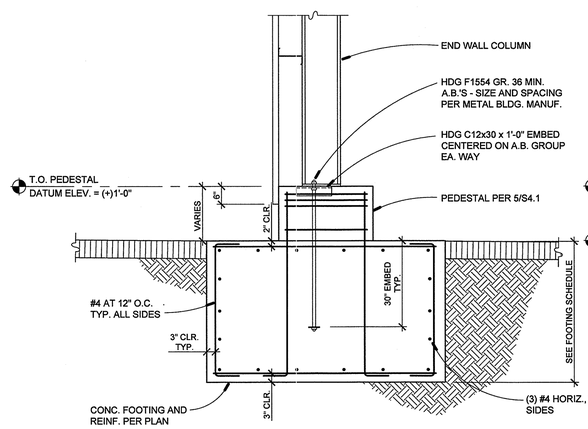

3 S4.1 FOOTING SECTION

1/2" = 1'-0"

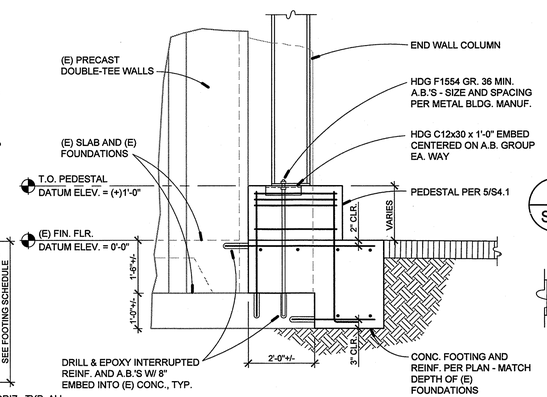

4 S4.1 FOOTING SECTION

1/2" = 1'-0"

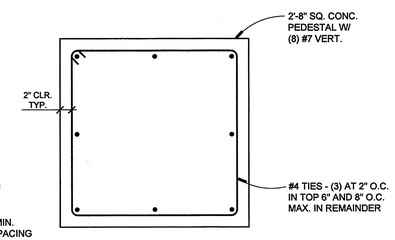

5 S4.1 PEDESTAL PLAN SECTION

1" = 1'-0"

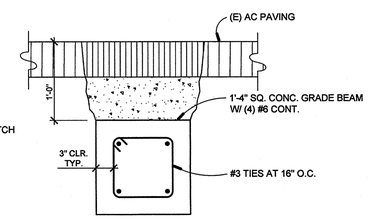

6 S4.1 GRADE BEAM SECTION

1" = 1'-0"

HYYTINEN ENGINEERING
5458 Longley Lane, Suite B
Reno, Nevada 89511
(775) 826-3019 PHONE
(775) 826-3076 FAX

DESIGNED BY: CR
DRAWN BY: NVGI
CHECKED BY: CR
DWG NO.:
SCALE (HORIZ): AS NOTED
SCALE (VERT): AS NOTED
PLOT DATE: 06-10-2011

CARSON CITY
PUBLIC WORKS DEPARTMENT
3505 BUTTI WAY CARSON CITY, NEVADA 89701
PH: 775-887-2355 FAX: 775-887-2112

PACIFICWEST
ENERGY SOLUTIONS
Conservation, Generation, Innovation
561 Keystone Ave., # 300, Reno, NV 89503
(800) 310-8080 Office / (800) 310-8586 Fax

PROFESSIONAL ENGINEER - STATE OF NEVADA
CHRISTOPHER M. ROPER
EXP. 12-31-11
CIVIL & STRUCTURAL
No. 15030

REV.	DATE	DESCRIPTION	BY	APP'D

CARSON CITY CORPORATE YARD
SALT/CINDER BUILDING AND SOLAR
PHOTOVOLTAIC PROJECT
PROJECT No. 2.0821

BUILDING SECTION AND DETAILS

SHEET
S4.1

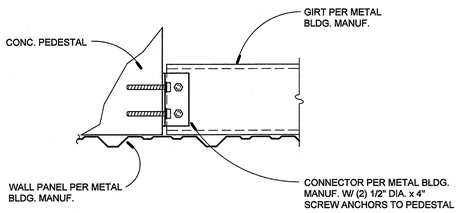

1 / S4.2 TYP. WIND GIRT ATTACHMENT AT PEDESTAL

1 1/2" = 1'-0"

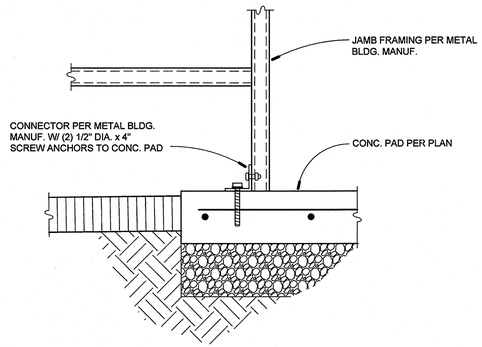

2 / S4.2 TYP. MAN DOOR JAMB ATTACHMENT

1 1/2" = 1'-0"

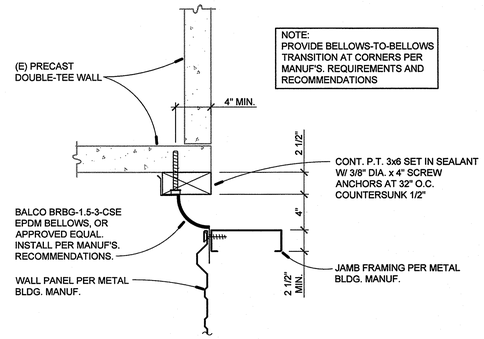

3 / S4.2 TYP. WALL TO WALL JOINT COVER

1 1/2" = 1'-0"

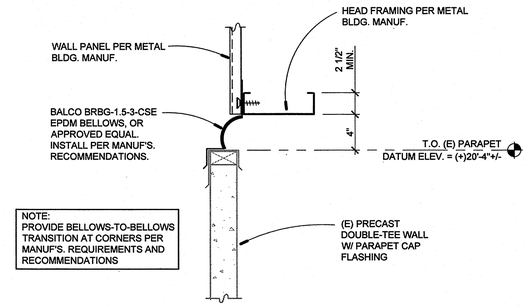

4 / S4.2 TYP. ROOF TO WALL JOINT COVER

1 1/2" = 1'-0"

HYYTINEN ENGINEERING
5458 Longley Lane, Suite B
Reno, Nevada 89511
(775) 826-3019 PHONE
(775) 826-3076 FAX

DESIGNED BY: CR
DRAWN BY: NVGI
CHECKED BY: CR
DWG NO.:
SCALE (HORIZ): AS NOTED
SCALE (VERT): AS NOTED
PLOT DATE: 06-10-2011

CARSON CITY
PUBLIC WORKS DEPARTMENT
3505 BUTTI WAY CARSON CITY, NEVADA 89701
PH: 775-887-2355 FAX: 775-887-2112

PACIFICWEST
ENERGY SOLUTIONS
Clean Energy Solutions
561 Keystone Ave., # 300, Reno, NV 89503
(800) 310-9080 Office / (800) 310-9596 Fax

PROFESSIONAL ENGINEER - STATE OF NEVADA
CHRISTOPHER M. ROPER
EXP. 12-31-11
CIVIL & STRUCTURAL
No. 15032
6/10/11

REV.	DATE	DESCRIPTION	BY	APP'D

CARSON CITY CORPORATE YARD
SALT/CINDER BUILDING AND SOLAR
PHOTOVOLTAIC PROJECT
PROJECT No. 2.0821

DETAILS

SHEET
S4.2

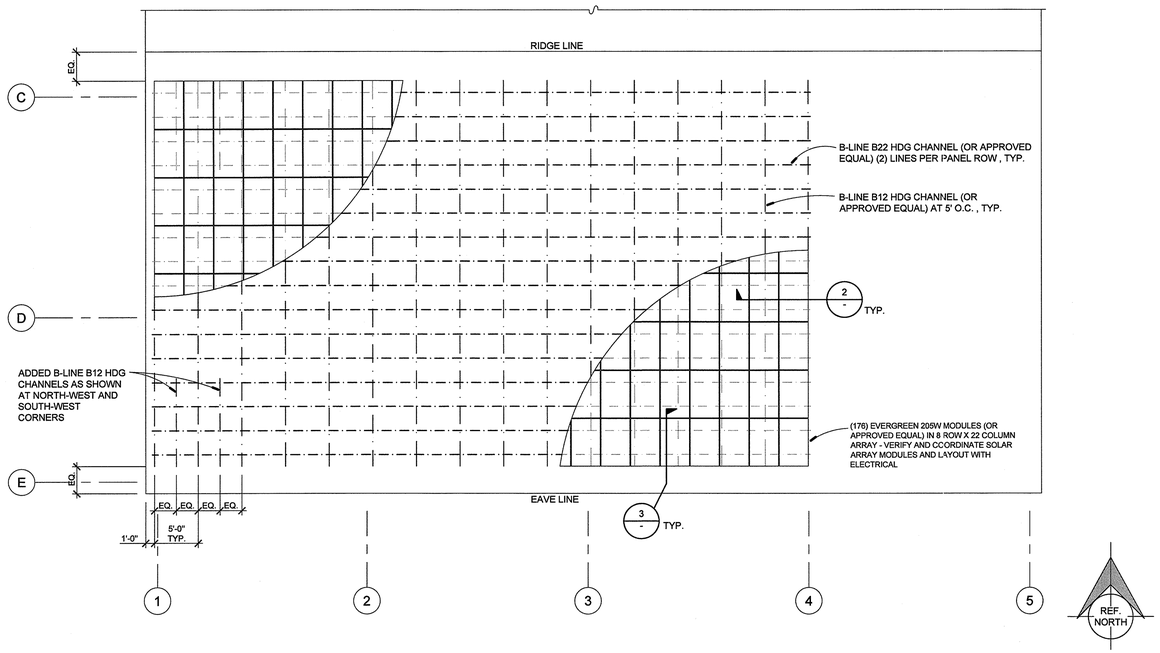

1 S5.1 SOLAR ARRAY ANCHORAGE LAYOUT

1/8" = 1'-0"

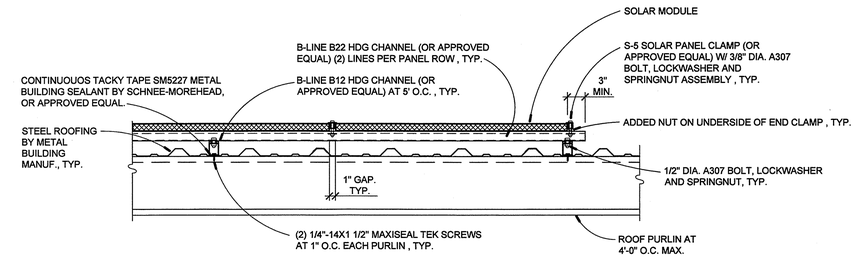

2 S5.1 SOLAR ARRAY ANCHORAGE SECTION

1" = 1'-0"

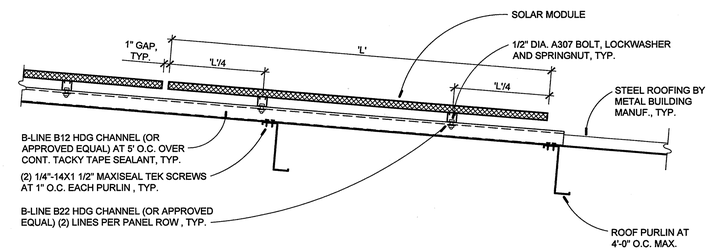

3 S5.1 SOLAR ARRAY ANCHORAGE SECTION

1/2" = 1'-0"

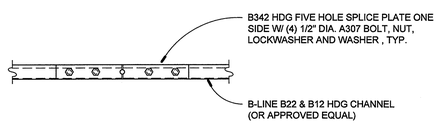

NOTE:
USE CONTINUOUS CHANNELS IN THE LONGEST LENGTHS PRACTICAL (20') WHEREVER POSSIBLE. WHERE SPLICES ARE REQUIRED, CENTER B22 SPLICES BETWEEN B12 CHANNELS, CENTER B12 SPLICES BETWEEN Z-PURLINS.

4 S5.1 TYPICAL CHANNEL SPLICE DETAIL

1 1/2" = 1'-0"

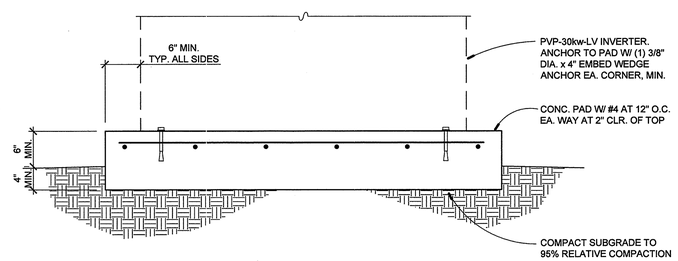

NOTE:
COORDINATE INVERTER PAD LAYOUT AND LOCATIONS W/ ELEC.

5 S5.1 TYP. INVERTER PAD

1" = 1'-0"

HYYTINEN ENGINEERING
5458 Longley Lane, Suite B
Reno, Nevada 89511
(775) 826-3019 PHONE
(775) 826-3076 FAX

DESIGNED BY: CR
DRAWN BY: NVGI
CHECKED BY: CR
DWG NO.:
SCALE (HORIZ): AS NOTED
SCALE (VERT): AS NOTED
PLOT DATE: 06-10-2011

CARSON CITY
PUBLIC WORKS DEPARTMENT
3505 BUTTI WAY CARSON CITY, NEVADA 89701
PH: 775-887-2355 FAX: 775-887-2112

PACIFICWEST ENERGY SOLUTIONS
Consultation | Generation | Innovation
561 Keystone Ave., # 300, Reno, NV 89503
(800) 310-9080 Office / (800) 310-9086 Fax

PROFESSIONAL ENGINEER - STATE OF NEVADA
CHRISTOPHER M. ROPER
EXP. 12-31-11
CIVIL & STRUCTURAL
No. 15032
6/10/11

REV.	DATE	DESCRIPTION	BY	APP'D

CARSON CITY CORPORATE YARD
SALT/CINDER BUILDING AND SOLAR
PHOTOVOLTAIC PROJECT
PROJECT No. 2.0821

SOLAR ARRAY PLAN AND DETAILS

SHEET
S5.1

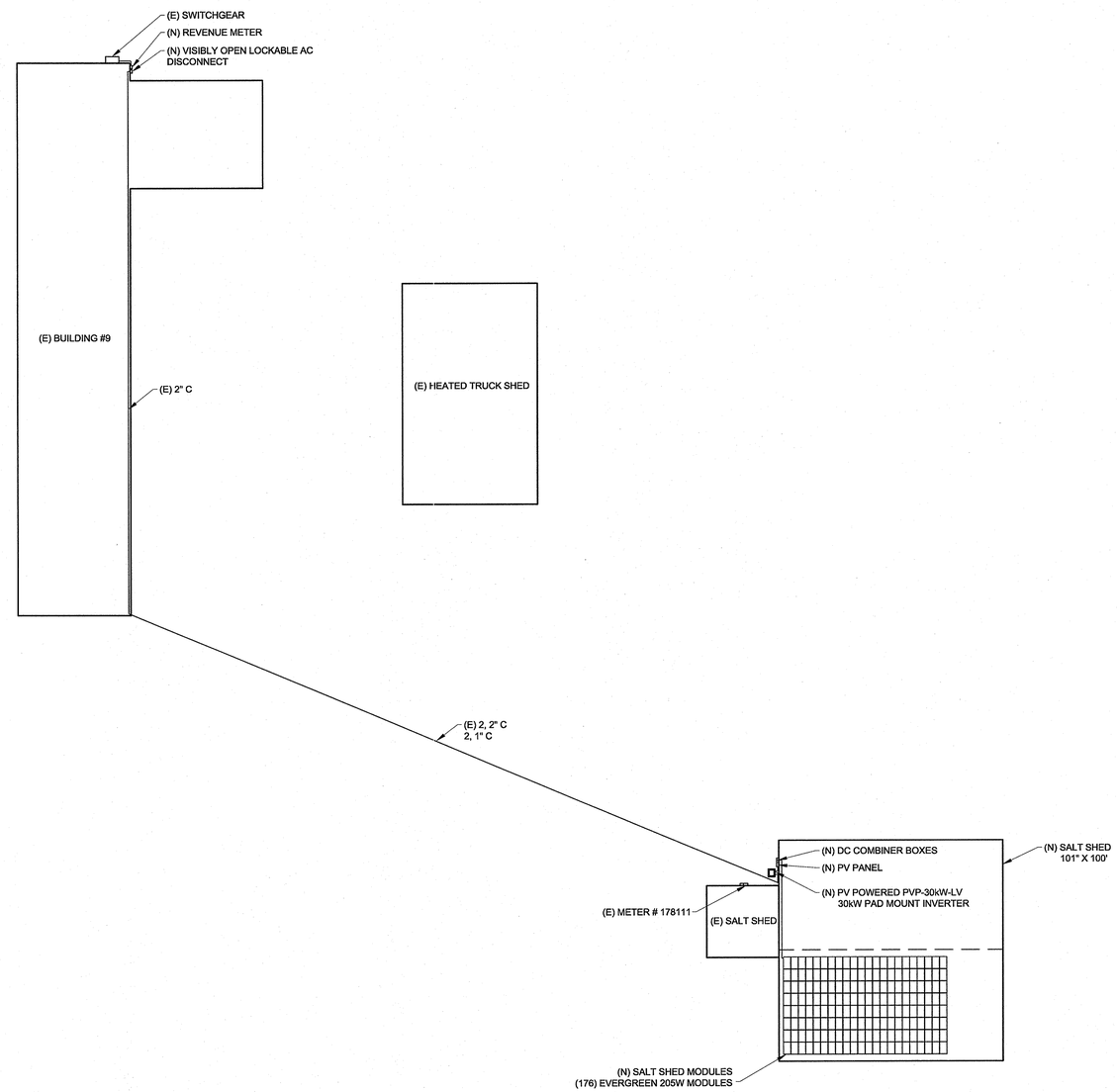

ELECTRICAL LAYOUT

1/32" = 1'-0"

NORTH

DESIGNED BY:	RC
DRAWN BY:	CG
CHECKED BY:	RC
DWG NO.:	
SCALE (HORIZ):	AS SHOWN
SCALE (VERT):	AS SHOWN
PLOT DATE:	06-10-2011

CARSON CITY
PUBLIC WORKS DEPARTMENT
3505 BUTTI WAY CARSON CITY, NEVADA 89701
PH: 775-887-2355 FAX: 775-887-2112

PACIFICWEST
ENERGY SOLUTIONS
Consulting, Design, Installation
561 Keystone Ave. # 300, Reno, NV 89503
800-310-9080 Office / 800-310-9596 Fax

PROFESSIONAL ENGINEER STATE OF NEVADA REGISTERED RICHARD J. WINETZ No. 9079 ELECTRICAL

REV.	DATE	DESCRIPTION	BY	APP'D
1	02/28/2011	INITIAL DESIGN	JC	RC
2	04/06/2011	REVISION # 1	CG	RC
3	05/23/2011	REVISION # 2	CG	RC

CARSON CITY CORPORATE YARD
SALT/CINDER BUILDING AND SOLAR
PHOTOVOLTAIC PROJECT
PROJECT No. 2.0821

ELECTRICAL LAYOUT

SHEET

E1.0

NOTES :

1. FINAL MODULE BRAND, SIZE TBD.
2. FINAL INVERTER BRAND TBD.
3. INVERTER & MODULES MUST MEET NV ENERGY REBATE REQUIREMENTS.
4. VISIBLY OPEN AC DISCONNECT MUST BE LOCATED WITHIN 10' UTILITY METER.
5. ORIGINAL UTILITY METER #178410 WILL BE REPLACED WITH A NET METER DURING INTERCONNECTION PROCESS.
6. CONTRACTOR TO PROVIDE DATA ACQUISITION SYSTEM FOR REMOTE MONITORING UTILIZING DECK MONITORING (OR APPROVED EQUAL).
7. CONTRACTOR TO PROVIDE FIBER OPTIC CONNECTION FROM INVERTER TO BUILDING #9 SERVER ROOM.
8. CONTRACTOR TO PROVIDE CABINET WITH HOFFMAN A302408 LP & PANEL A30P24 AT NEW SALT SHED BUILDING. CABINET TO INCLUDE (1) 20 A RECEPTACLE INSIDE WITH 3/4" CONDUIT FOR POWER. RECEPTACLE TO BE PLACED IN LOWER LEFT CORNER OF CABINET.
9. INVERTER TO HAVE TCP PORT CONNECTION FOR SCADA DATA. PREFERRED COMMUNICATION PROTOCOL IS MODBUS/TCP.

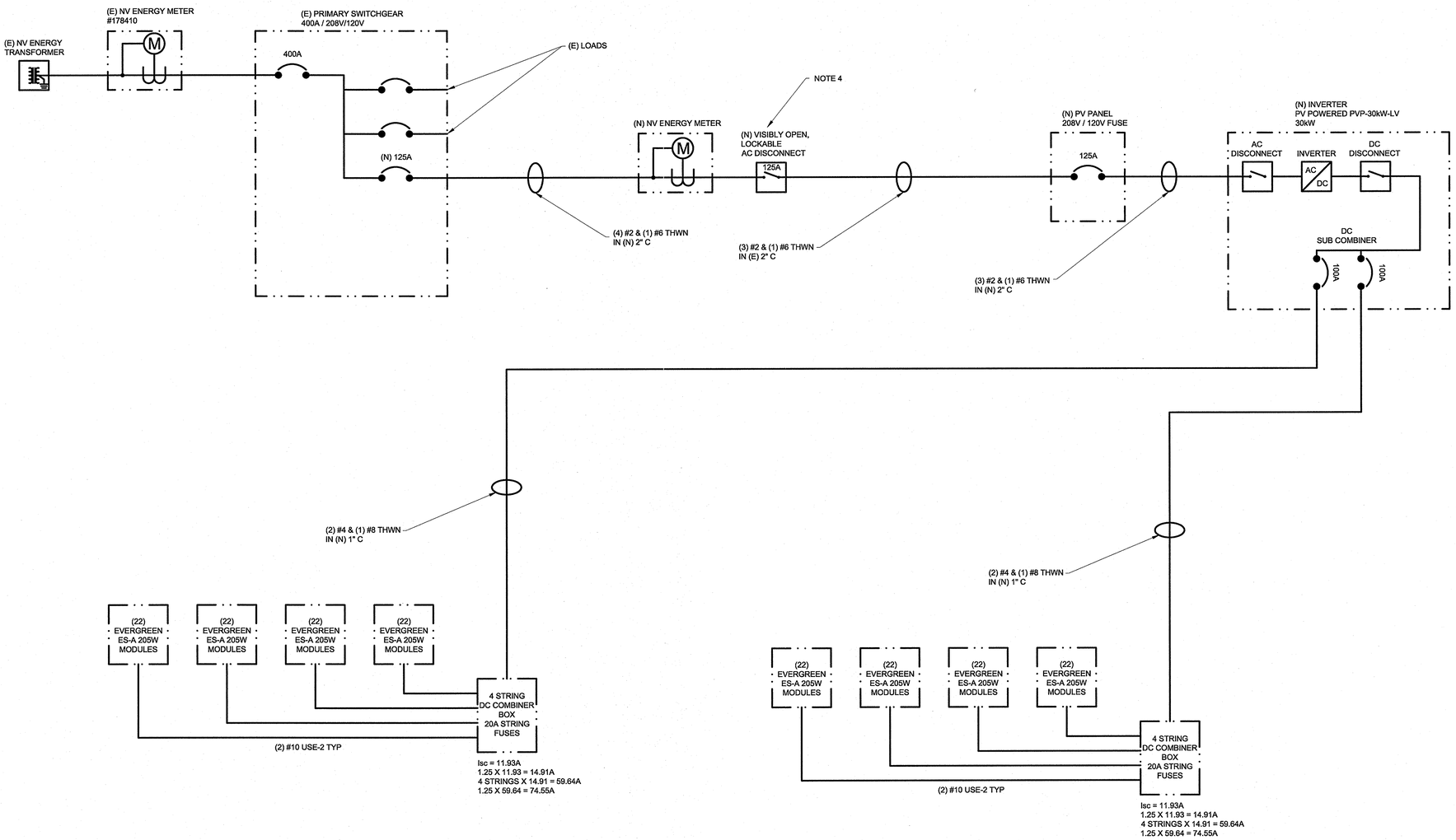

ELECTRICAL SINGLE LINE LAYOUT

1/32" = 1'-0"

NORTH

DESIGNED BY: RC
DRAWN BY: CG
CHECKED BY: RC
DWG NO.:
SCALE (HORIZ): AS SHOWN
SCALE (VERT): AS SHOWN
PLOT DATE: 06-10-2011

CARSON CITY
PUBLIC WORKS DEPARTMENT
3505 BUTTI WAY CARSON CITY, NEVADA 89701
PH: 775-887-2355 FAX: 775-887-2112

PACIFICWEST
ENERGY SOLUTIONS
Certified Solar Contractor
561 Keystone Ave. # 300, Reno, NV 89503
800-310-9080 Office / 800-310-9596 Fax

STATE OF NEVADA
REGISTERED PROFESSIONAL ENGINEER
RICHARD J. CUTTITTA
Expires 12/31/11

REV	DATE	DESCRIPTION	BY	APP'D
1	02/28/2011	INITIAL DESIGN	JC	RC
2	04/06/2011	REVISION # 1	CG	RC
3	05/23/2011	REVISION # 2	CG	RC

CARSON CITY CORPORATE YARD
SALT/CINDER BUILDING AND SOLAR
PHOTOVOLTAIC PROJECT
PROJECT No. 2.0821

ELECTRICAL SINGLE LINE LAYOUT

SHEET
E2.0

GENERAL NOTES:

1. ALL CONDUIT TO BE INSTALLED PURSUANT TO APPROPRIATE LOCAL AND NATIONAL STANDARDS.
2. ALL CONDUIT TO BE INSTALLED PURSUANT TO LOCAL AND NATIONAL CODE REQUIREMENTS. THIS PRELIMINARY DESIGN DOES NOT PROVIDE FOR INTERIOR/EXTERIOR DUE TO LACK OF SPECIFIC DATA ON FIELD CIRCUIT REQUIREMENTS.
3. JUNCTION BOXES AS NEEDED IN COMPLIANCE WITH LOCAL AND NATIONAL STANDARDS.
4. ALL SWITCHING AS INDICATED MUST PROVIDE FOR THE FOLLOWING:
   - 4.1. ONE SWITCH AT EACH NOTED LOCATION MUST CONTROL ALL OVERHEAD INTERIOR LIGHTING.
   - 4.2. ONE SWITCH AT EACH NOTED LOCATION MUST CONTROL ALL EXTERIOR FLOOD LIGHTING.
   - 4.3. ONE SWITCH AT EACH NOTED LOCATION MUST CONTROL ALL EXTERIOR WALLPACK LIGHTING.
   - 4.4. EXTERIOR FLOOD AND WALLPACK LIGHTING TO BE EQUIPPED WITH PHOTOCELL IN ADDITION TO SWITCHING AS NOTED.
   - 4.5. CONTROL THROUGH RELAY OR DIRECT WIRING FOR ALL SWITCHING INDICATED AS NOTED.
5. ALL WIRING INDICATED SHALL BE 90 DEG C THHW OR EQUIVALENT IN ACCORDANCE WITH APPROPRIATE LOCAL AND NATIONAL CODES AND STANDARDS.
6. ALL ELECTRICAL CONNECTIONS TO BE INSTALLED ON THE EXISTING PANEL (1/E3.0) LOCATED ON THE (E) SALT SHED. CONTRACTOR TO FIELD VERIFY THE EXISTING PANEL HAS ADEQUATE SPACE AND CAPACITY FOR USE. DESIGN ENGINEER HAS NOT REVIEWED PANEL (1/E3.0) FOR CAPACITY PURPOSES AS THE EXISTING LOAD INFORMATION WAS NOT AVAILABLE AT THE TIME OF SYSTEM DESIGN.
7. ALL OUTLETS TO BE GFCI PROTECTED AND SUITED FOR "WET" ENVIRONMENTS WITH APPROPRIATE COVERS AND SEALS.
8. CONTRACTOR TO VERIFY EXISTING SUB-PANEL FEED AND UTILIZE ALL SPARE POSITIONS FOR NEW CIRCUITS AS INDICATED HEREIN. CONTRACTOR TO REWIRE OR REALLOCATE EXISTING SPARE BREAKER AND OTHER UNUSED BREAKERS TO ACCOMMODATE THIS DESIGN.

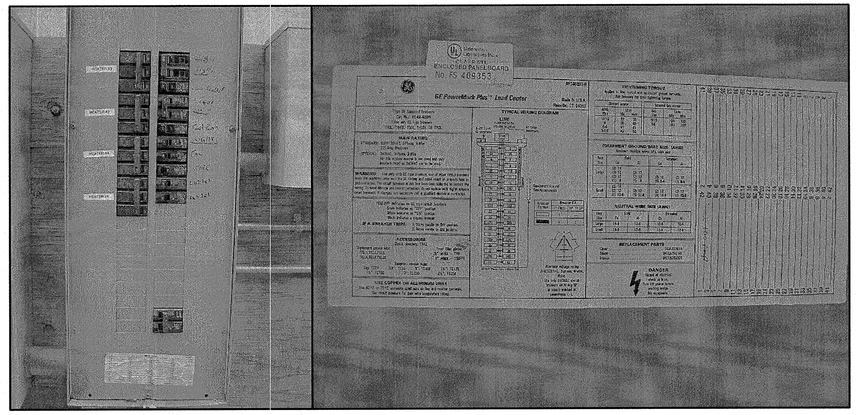

EXISTING 225 AMPERE PANEL (1/E3.0)

NTS

ELECTRICAL SYMBOLS

- 20 AMPERE ELECTRICAL OUTLET: ALL OUTLETS TO BE INSTALLED 24" ABOVE FLOOR.
- EXTERIOR FLOOD LAMP FIXTURE: (1) 200 WATT, 120 V, INDUCTION FIXTURE.
- W — EXTERIOR WALLPACK FIXTURE: (1) 2L, 13W CFL WALLPACK FIXTURE, 120 V.
- S S S — LIGHTING SWITCH: THREE SWITCHES: 1. FLOOD LIGHTING; 2. INTERIOR LIGHTING; 3. WALLPACK LIGHTING.
- F — INTERIOR FLUORESCENT FIXTURE: (2) 1' X 4' VAPOR TIGHT T8, 2L, 28 WATT LAMP TANDEM WIRED FIXTURE, 120 V.

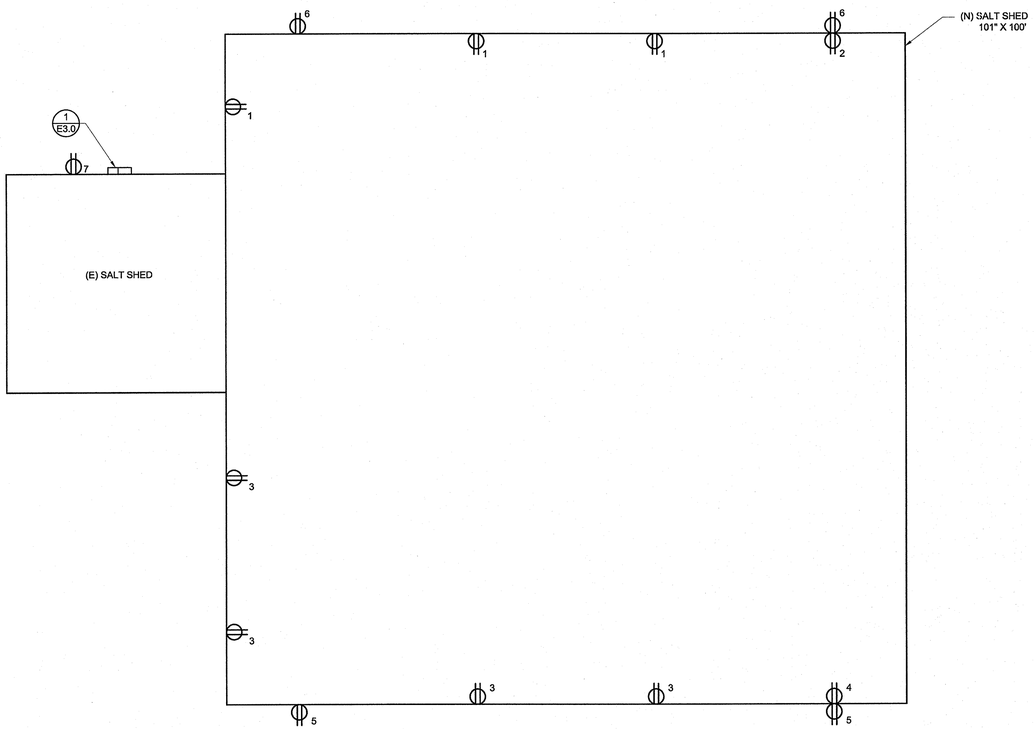

- CIRCUIT 1 - 20 AMPERE OUTLETS (3) FROM EXISTING PANEL ON 20 AMPERE BREAKER, 2 #12 CU, 1#12CU BARE IN 1/2" C.
- CIRCUIT 2 - DEDICATED 20 AMPERE OUTLET FROM EXISTING PANEL ON 20 AMPERE BREAKER, 2 #12 CU, 1 #12 CU BARE IN 1/2" C. DESIGNED FOR BLOCK HEATERS FOR 2 TRUCKS MAXIMUM. INCLUDE THERMOSTAT CONTROL FOR POWER RELAY & CORD REELS FOR CORD MANAGEMENT.
- CIRCUIT 3 - 20 AMPERE OUTLETS (4) FROM EXISTING PANEL ON 20 AMPERE BREAKER, 2 #12 CU, 1#12CU BARE IN 1/2" C.
- CIRCUIT 4 - DEDICATED 20 AMPERE OUTLET FROM EXISTING PANEL ON 20 AMPERE BREAKER, 2 #12 CU, 1 #12 CU BARE IN 1/2". DESIGNED FOR BLOCK HEATERS FOR 2 TRUCKS MAXIMUM. INCLUDE THERMOSTAT CONTROL FOR POWER RELAY & CORD REELS FOR CORD MANAGEMENT.
- CIRCUIT 5 - 20 AMPERE OUTLETS (2) FROM EXISTING PANEL ON 20 AMPERE BREAKER, 2 #12 CU, 1 #12 CU BARE IN 1/2" C.
- CIRCUIT 6 - 20 AMPERE OUTLETS (2) FROM EXISTING PANEL ON 20 AMPERE BREAKER, 2 #12 CU, 1 #12 CU BARE IN 1/2" C.
- CIRCUIT 7 - 20 AMPERE OUTLET FROM EXISTING PANEL ON 20 AMPERE BREAKER, 2 #12 CU, 1 #12 CU BARE IN 1/2" C.

OUTLET DIAGRAM

3/32" = 1'-0"

NORTH

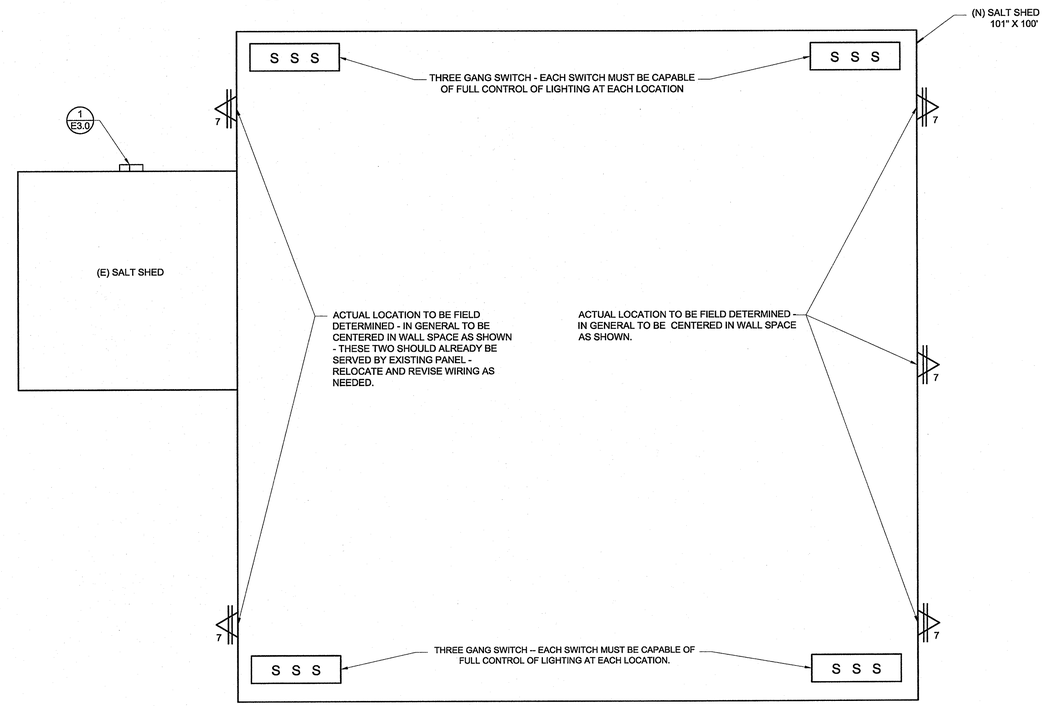

- CIRCUIT 7 - 20 AMPERE FLOOD LIGHTING CIRCUIT FROM EXISTING PANEL ON 20 AMPERE BREAKER, 2 #12 CU, 1#12CU BARE, IN 1/2" C.

FLOOD LIGHTING DIAGRAM

3/32" = 1'-0"

NORTH

DESIGNED BY: RC
DRAWN BY: CG
CHECKED BY: RC
DWG NO.:
SCALE (HORIZ): AS SHOWN
SCALE (VERT): AS SHOWN
PLOT DATE: 06-10-2011

CARSON CITY
PUBLIC WORKS DEPARTMENT
3505 BUTTI WAY CARSON CITY, NEVADA 89701
PH: 775-887-2355 FAX: 775-887-2112

PACIFICWEST
ENERGY SOLUTIONS
Conservation, Generation, Innovation
561 Keystone Ave. # 300, Reno, NV 89503
800-310-9080 Office / 800-310-9596 Fax

PROFESSIONAL ENGINEER - STATE OF NEVADA - REGISTERED

REV.	DATE	DESCRIPTION	BY	APP'D
1	02/28/2011	INITIAL DESIGN	JC	RC
2	04/06/2011	REVISION # 1	CG	RC
3	05/23/2011	REVISION # 2	CG	RC

CARSON CITY CORPORATE YARD
SALT/CINDER BUILDING AND SOLAR
PHOTOVOLTAIC PROJECT
PROJECT No. 2.0821

GENERAL NOTES/ ELECTRICAL SYMBOLS/
OUTLET DIAGRAM/ FLOOD LIGHTING DIAGRAM

SHEET
E3.0

GENERAL NOTES:

1. ALL CONDUIT TO BE INSTALLED PURSUANT TO APPROPRIATE LOCAL AND NATIONAL STANDARDS.
2. ALL CONDUIT TO BE INSTALLED PURSUANT TO LOCAL AND NATIONAL CODE REQUIREMENTS. THIS PRELIMINARY DESIGN DOES NOT PROVIDE FOR INTERIOR/EXTERIOR DUE TO LACK OF SPECIFIC DATA ON FIELD CIRCUIT REQUIREMENTS.
3. JUNCTION BOXES AS NEEDED IN COMPLIANCE WITH LOCAL AND NATIONAL STANDARDS.
4. ALL SWITCHING AS INDICATED MUST PROVIDE FOR THE FOLLOWING:
   - 4.1. ONE SWITCH AT EACH NOTED LOCATION MUST CONTROL ALL OVERHEAD INTERIOR LIGHTING.
   - 4.2. ONE SWITCH AT EACH NOTED LOCATION MUST CONTROL ALL EXTERIOR FLOOD LIGHTING.
   - 4.3. ONE SWITCH AT EACH NOTED LOCATION MUST CONTROL ALL EXTERIOR WALLPACK LIGHTING.
   - 4.4. EXTERIOR FLOOD AND WALLPACK LIGHTING TO BE EQUIPPED WITH PHOTOCELL IN ADDITION TO SWITCHING AS NOTED.
   - 4.5. CONTROL THROUGH RELAY OR DIRECT WIRING FOR ALL SWITCHING INDICATED AS NOTED.
5. ALL WIRING INDICATED SHALL BE 90 DEG C THHW OR EQUIVALENT IN ACCORDANCE WITH APPROPRIATE LOCAL AND NATIONAL CODES AND STANDARDS.
6. ALL ELECTRICAL CONNECTIONS TO BE INSTALLED ON THE EXISTING PANEL (1/E3.0) LOCATED ON THE (E) SALT SHED. CONTRACTOR TO FIELD VERIFY THE EXISTING PANEL HAS ADEQUATE SPACE AND CAPACITY FOR USE. DESIGN ENGINEER HAS NOT REVIEWED PANEL (1/E3.0) FOR CAPACITY PURPOSES AS THE EXISTING LOAD INFORMATION WAS NOT AVAILABLE AT THE TIME OF SYSTEM DESIGN.
7. ALL OUTLETS TO BE GFCI PROTECTED AND SUITED FOR "WET" ENVIRONMENTS WITH APPROPRIATE COVERS AND SEALS.
8. CONTRACTOR TO VERIFY EXISTING SUB-PANEL FEED AND UTILIZE ALL SPARE POSITIONS FOR NEW CIRCUITS AS INDICATED HEREIN. CONTRACTOR TO REWIRE OR REALLOCATE EXISTING SPARE BREAKER AND OTHER UNUSED BREAKERS TO ACCOMMODATE THIS DESIGN.

CALCULATIONS:

OUTLET CIRCUIT CALCULATIONS: Number Allowed in General -- 20 Ampere Receptacle -- 8
Max on any one Circuit in Design -- 5

	Lamp Wattage	Voltage	Lamp Amps	No. on Circuit	Total Amperage	Selected Size (Amps)
EXTERIOR FLOOD LIGHT CALCULATIONS	200	120	1.67	5	8.33	20
INTERIOR FLUORESCENT LIGHT CALCULATIONS	84	120	0.70	30	21	30
EXTERIOR WALLPACK CALCULATIONS	26	120	0.22	11	2.38	20

ELECTRICAL SYMBOLS

- 20 AMPERE ELECTRICAL OUTLET: ALL OUTLETS TO BE INSTALLED 24" ABOVE FLOOR.
- EXTERIOR FLOOD LAMP FIXTURE: (1) 200 WATT, 120 V, INDUCTION FIXTURE.
- W — EXTERIOR WALLPACK FIXTURE: (1) 2L, 13W CFL WALLPACK FIXTURE, 120 V.
- S S S — LIGHTING SWITCH: THREE SWITCHES: 1. FLOOD LIGHTING; 2. INTERIOR LIGHTING; 3. WALLPACK LIGHTING.
- F — INTERIOR FLUORESCENT FIXTURE: (2) 1' X 4' VAPOR TIGHT T8, 2L, 28 WATT LAMP TANDEM WIRED FIXTURE, 120 V.

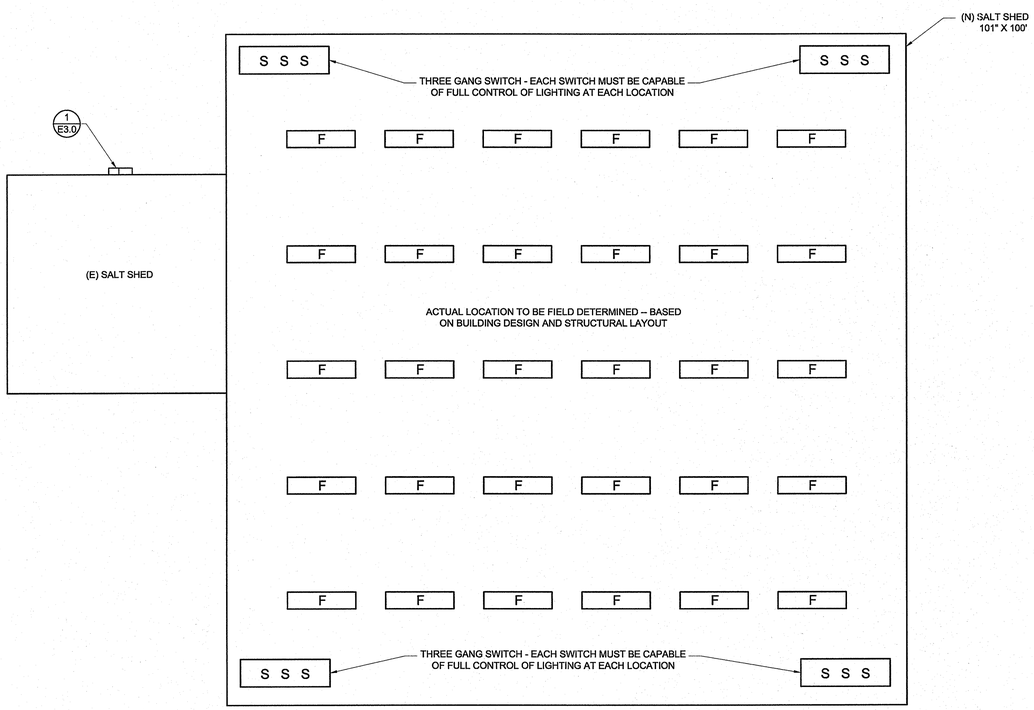

F — CIRCUIT 8 - 30 AMPERE LIGHTING CIRCUIT TO (30) FIXTURES FROM EXISTING PANEL ON 30 AMPERE BREAKER, 3 #10 CU, 1#10CU BARE, IN 1/2" C

NOTE:
ACTUAL LOCATION TO BE FIELD DETERMINED BASED ON STRUCTURAL DESIGN FOR BUILDING.

INTERIOR LIGHTING DIAGRAM
3/32" = 1'-0"

NORTH

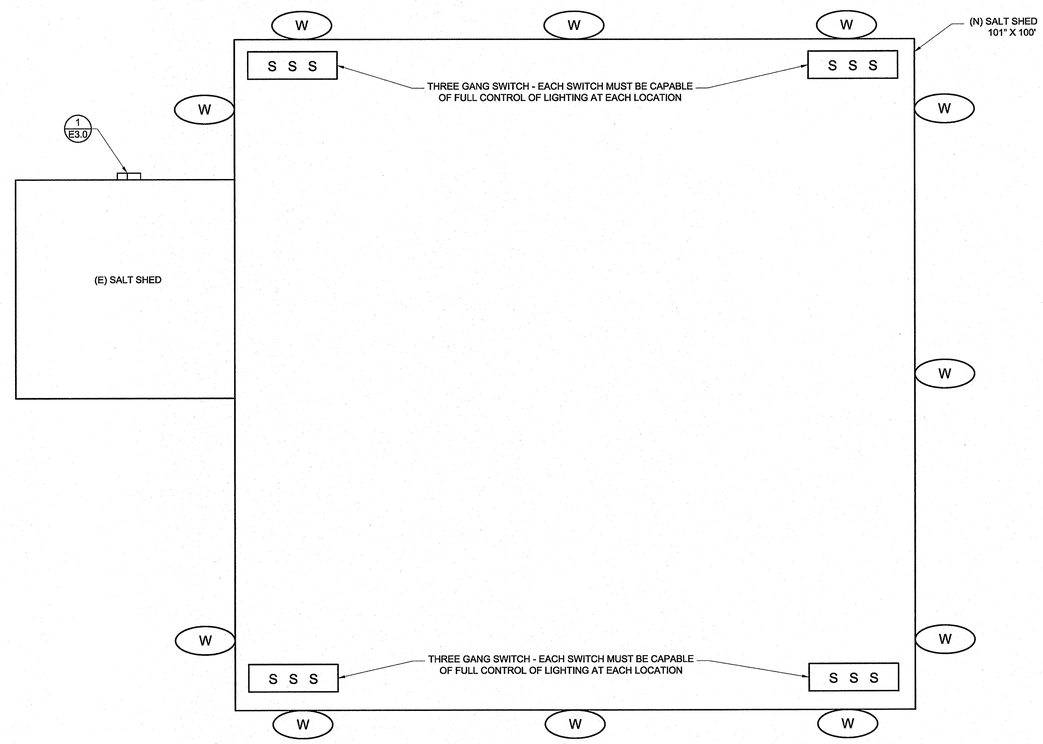

W — CIRCUIT 9 - 20 AMPERE EXTERIOR WALLPACK LIGHTING CIRCUIT FROM EXISTING PANEL ON 20 AMPERE BREAKER, 2 #12 CU, 1#12CU BARE, IN 1/2" C.

NOTE:
ACTUAL LOCATION TO BE FIELD DETERMINED. IN GENERAL EVERY 25-35 FT.

WALLPACK LIGHTING DIAGRAM
3/32" = 1'-0"

NORTH

DESIGNED BY: RC
DRAWN BY: CG
CHECKED BY: RC
DWG NO.:
SCALE (HORIZ): AS SHOWN
SCALE (VERT): AS SHOWN
PLOT DATE: 06-10-2011

CARSON CITY
PUBLIC WORKS DEPARTMENT
3505 BUTTI WAY CARSON CITY, NEVADA 89701
PH: 775-887-2355 FAX: 775-887-2112

PACIFICWEST
ENERGY SOLUTIONS
Carson City, Reno, Las Vegas, Idaho Falls, Boise
561 Keystone Ave. # 300, Reno, NV 89503
800-310-9080 Office / 800-310-9586 Fax

STATE OF NEVADA REGISTERED PROFESSIONAL ENGINEER
No. 16911
RICHARD CLAYTON
Exp. 12/31/12
ELECTRICAL

REV.	DATE	DESCRIPTION	BY	APP'D
1	02/28/2011	INITIAL DESIGN	JC	RC
2	04/06/2011	REVISION # 1	CG	RC
3	05/23/2011	REVISION # 2	CG	RC

CARSON CITY CORPORATE YARD
SALT/CINDER BUILDING AND SOLAR
PHOTOVOLTAIC PROJECT
PROJECT No. 2.0821

GENERAL NOTES/ ELECTRICAL SYMBOLS/
INTERIOR & WALLPACK LIGHTING DIAGRAM

SHEET
E4.0

ELECTRICAL SPECIFICATIONS

FOR

Carson City Corporate Yard Salt/Cinder Building and Solar Photovoltaic Project

3303 Butti Way
Carson City, Nevada 89701

APN 10-031-04
Project No. 2.0821

PACIFICWEST
ENERGY SOLUTIONS
Conservation, Generation, Innovation
561 Keystone Ave. # 300 Reno, NV 89503
800-310-9080 Office/ 800-310-9596 Fax

SOLAR PHOTOVOLTAIC LOAD CALCULATIONS

CITY OF CARSON CITY

General Information		
Site Name	Public Works (Salt Shed)	
Address	3505 Butti Way	
City, State Zip	Carson City, NV 89701	
Weather Data	Deg F	Deg C
Record High Temp	105.0	40.6
Record Low Temp	-22.0	-30.0

Photovoltaic Module Specifications		
Manufacturer	Evergreen	
Model	ES-A-205	
Pmax	205	W
Voc	22.70	V
Vmp	18.20	V
Isc	11.93	A
Imp	11.27	A
Vsystem_max	600.00	V
Efficiency STC	13.10	%
Tvoc	-0.31	%/Deg C
Tisc	0.05	%/Deg C
Tpmax	-0.43	%/Deg C
Connector Type	MC	
Conductor Size	10 AWG USE-2	

Inverter Specifications		
Manufacturer	PV Powered	
Model	PVP-30kW-LV	
Pmax	30	KW
Vdc	600	V
Idc	107	A
Vac	208	V
Iac	83	A
Vop	208	V
CEC Efficiency	93	%

SOLAR PHOTOVOLTAIC LOAD CALCULATIONS

CITY OF CARSON CITY

String Information			
Module Qty	22		
Pmax	4,510	W	
Voc	499.4	V	
Vmp	400.4	V	
Isc	11.9	A	
Imp	11.3	A	
Imax	14.9	A	Per NEC/CEC 690.8(A)(1), 125% of Isc
Conductor Imax	18.6	A	Per NEC/CEC 690.8(B)(1), 125% of Imax
Conductor Size	10 AWG USE-2		
Conductor Starting Ampacity	40	A	
Temperature Derate	0.87		Per NEC/CEC Table 310.16, T 105-113 Deg F
Conduit Fill Derate	1.00		Per NEC/CEC Table B.310.11, 1-3 Wires
Conductor Adjusted Ampacity	34.8	A	

Branch Information			
String Qty	4		
Pmax	18,040	W	
Voc	499.4	V	
Vmp	400.4	V	
Isc	47.7	A	
Imp	45.1	A	
Imax	59.7	A	Per NEC/CEC 690.8(A)(1) 125% of Isc
Conductor Imax	74.6	A	Per NEC/CEC 690.8(B)(1) 125% of Imax
Conductor Qty	1		
Conductor Size	#4 AWG THWN-2		
Conductor Starting Ampacity	95	A	
Temperature Derate	0.87		Per NEC/CEC Table 310.16, T 105-113 Deg F
Conduit Fill Derate	1.00		Per NEC/CEC Table B.310.11, 1-3 Wires
Conductor Adjusted Ampacity	82.65	A	

Branch Information			
String Qty	4		
Pmax	18,040	W	
Voc	499.4	V	
Vmp	400.4	V	
Isc	47.7	A	
Imp	45.1	A	
Imax	59.7	A	Per NEC/CEC 690.8(A)(1) 125% of Isc
Conductor Imax	74.6	A	Per NEC/CEC 690.8(B)(1) 125% of Imax
Conductor Qty	1		
Conductor Size	#4 AWG THWN-2		
Conductor Starting Ampacity	95	A	
Temperature Derate	0.87		Per NEC/CEC Table 310.16, T 105-113 Deg F
Conduit Fill Derate	1.00		Per NEC/CEC Table B.310.11, 1-3 Wires
Conductor Adjusted Ampacity	82.65	A	

Array Information			
Branch Qty	1		
Pmax	18,040	W	
Voc	499.4	V	
Vmp	400.4	V	
Isc	47.7	A	
Imp	45.1	A	
Imax	59.7	A	Per NEC/CEC 690.8(A)(1) 125% of Isc
Conductor Imax	74.6	A	Per NEC/CEC 690.8(B)(1) 125% of Imax

Array Information			
Branch Qty	1		
Pmax	18,040	W	
Voc	499.4	V	
Vmp	400.4	V	
Isc	47.7	A	
Imp	45.1	A	
Imax	59.7	A	Per NEC/CEC 690.8(A)(1) 125% of Isc
Conductor Imax	74.6	A	Per NEC/CEC 690.8(B)(1) 125% of Imax

Inverter Information			
Inverter Qty	1		
Pmax	33,554	W	
Vac	208.0	V	
Iac	83.0	A	
Conductor Imax	103.8	A	Per NEC/CEC 690.8(B)(1) 125% of Imax
Conductor Qty	1		
Conductor Size	#2 AWG THWN-2		
Conductor Starting Ampacity	130	A	
Temperature Derate	0.87		Per NEC/CEC Table 310.16, T 105-113 Deg F
Conduit Fill Derate	1.00		Per NEC/CEC Table B.310.11, 1-3 Wires
Conductor Adjusted Ampacity	113.1	A	

STRUCTURAL SPECIFICATIONS

FOR

Carson City Public Works Dept.
Salt and Cinder Storage Building

3505 Butti Way
Carson City, Nevada 89701

Structural Specifications Index

03 30 00	Cast-in-Place Concrete
13 34 19	Metal Building Systems
31 20 00	Structural Earthwork

REGISTERED PROFESSIONAL ENGINEER-STATE OF NEVADA
CHRISTOPHER M. ROPER
EXP. 12-31-11
CIVIL & STRUCTURAL
No.15032
6/10/11

HYYTINEN ENGINEERING
5458 Longley Lane, Suite B
Reno, NV 89511
775/826-3019 775/826-3076 FAX
www.hyytinenengineering.com

HE#3-11

SECTION 03 30 00 – CAST-IN-PLACE CONCRETE

PART 1 – GENERAL

1.1 SUMMARY

A. Section includes cast-in-place concrete, including formwork, reinforcement, concrete materials, mixture design, placement procedures, and finishes, for the following:

1. Footings.
2. Pedestals.
3. Slabs-on-grade.

1.2 DEFINITIONS

A. Cementious Materials: Portland cement alone or in combination with one of the following: fly ash or ground granulated blast-furnace slag; subject to compliance with requirements.

1.3 SUBMITTALS

A. Product Data: For each type of product indicated.

B. Design Mixtures: For each concrete mixture. Submit alternate design mixtures when characteristics of materials, Project conditions, weather, test results, or other circumstances warrant adjustments.

C. Steel Reinforcement Shop Drawings: Placing drawings that detail fabrication, bending, and placement. Include bar sizes, lengths, material, grade, bar schedules, stirrup spacing, bent bar diagrams, bar arrangement, splices and laps, mechanical connections, tie spacing, hoop spacing, and supports for concrete reinforcement.

D. Construction Joint Layout: Indicate proposed construction joints required to construct the structure.

1. Location of construction joints is subject to approval of the Engineer.

E. Material Certificates: For each of the following, signed by manufacturers:

1. Cementious materials.
2. Admixtures.
3. Form materials and form-release agents.
4. Steel reinforcement and accessories.
5. Fiber reinforcement.
6. Curing compounds.

F. Material Test Reports: For the following, from a qualified testing agency, indicating compliance with requirements:

1. Aggregates. Include service record data indicating absence of deleterious expansion of concrete due to alkali aggregate reactivity**.**

G. Field quality-control reports.

1.4 QUALITY ASSURANCE

A. Installer Qualifications: A qualified installer who employs on Project personnel having at least 5 years of experience of successfully performing projects of a similar size and scope. Use adequate numbers of skilled workmen who are thoroughly trained and experienced in the necessary crafts and who are completely familiar with the specified requirements and the methods needed for proper performance of the Work of this section.

B. Manufacturer Qualifications: A firm experienced in manufacturing ready-mixed concrete products and that complies with ASTM C 94/C 94M requirements for production facilities and equipment.

   1. Manufacturer certified according to NRMCA's "Certification of Ready Mixed Concrete Production Facilities".

C. Testing Agency Qualifications: An independent agency, acceptable to authorities having jurisdiction, qualified according to ASTM C 1077 and ASTM E 329 for testing indicated.

   1. Personnel conducting field tests shall be qualified as ACI Concrete Field Testing Technician, Grade 1, according to ACI CP-1 or an equivalent certification program.
   2. Personnel performing laboratory tests shall be ACI-certified Concrete Strength Testing Technician and Concrete Laboratory Testing Technician - Grade I. Testing Agency laboratory supervisor shall be an ACI-certified Concrete Laboratory Testing Technician - Grade II.

D. Source Limitations: Obtain each type or class of cementitious material of the same brand from the same manufacturer's plant, obtain aggregate from single source, and obtain admixtures from single source from single manufacturer.

E. ACI Publications: Comply with the following unless modified by requirements in the Contract Documents:

   1. ACI 301, "Specifications for Structural Concrete," Sections 1 through 5.
   2. ACI 117, "Specifications for Tolerances for Concrete Construction and Materials".

F. Concrete Testing Service: Engage a qualified independent testing agency to perform material evaluation tests and to design concrete mixtures.

1.5 DELIVERY, STORAGE, AND HANDLING

A. Steel Reinforcement: Deliver, store, and handle steel reinforcement to prevent bending and damage.

PART 2 – PRODUCTS

2.1 FORM-FACING MATERIALS

A. Smooth-Formed Finished Concrete: Form-facing panels that will provide continuous, true, and smooth concrete surfaces. Furnish in largest practicable sizes to minimize number of joints.

   1. Plywood, metal, or other approved panel materials.
   2. Exterior-grade plywood panels, suitable for concrete forms, complying with DOC PS 1, and as follows:
      a. Medium-density overlay, Class 1 or better; mill-release agent treated and edge sealed.

B. Rough-Formed Finished Concrete: Plywood, lumber, metal, or another approved material. Provide lumber dressed on at least two edges and one side for tight fit.

C. Chamfer Strips: Wood, metal, PVC, or rubber strips, 3/4 by 3/4 inch, minimum.

D. Form-Release Agent: Commercially formulated form-release agent that will not bond with, stain, or adversely affect concrete surfaces and will not impair subsequent treatments of concrete surfaces.

1. Formulate form-release agent with rust inhibitor for steel form-facing materials.

E. Form Ties: Factory-fabricated, removable or snap-off metal or glass-fiber-reinforced plastic form ties designed to resist lateral pressure of fresh concrete on forms and to prevent spalling of concrete on removal.

1. Furnish units that will leave no corrodible metal closer than 1 inch to the plane of exposed concrete surface.
2. Furnish ties that, when removed, will leave holes no larger than 1 inch in diameter in concrete surface.

2.2 STEEL REINFORCEMENT

A. Reinforcing Bars: ASTM A 615/A 615M, Grade 60, deformed.

B. Low-Alloy-Steel Reinforcing Bars: ASTM A 706/A 706M, deformed.

C. Plain-Steel Wire: ASTM A 82/A 82M, as drawn.

D. Deformed-Steel Wire: ASTM A 496/A 496M.

E. Plain-Steel Welded Wire Reinforcement: ASTM A 185/A 185M, plain, fabricated from as-drawn steel wire into flat sheets.

F. Deformed-Steel Welded Wire Reinforcement: ASTM A 497/A 497M, flat sheet.

2.3 REINFORCEMENT ACCESSORIES

A. Bar Supports: Bolsters, chairs, spacers, and other devices for spacing, supporting, and fastening reinforcing bars and welded wire reinforcement in place. Manufacture bar supports from steel wire, plastic, or precast concrete according to CRSI's "Manual of Standard Practice," of greater compressive strength than concrete and as follows:

1. For concrete surfaces exposed to view where legs of wire bar supports contact forms, use CRSI Class 1 plastic-protected steel wire or CRSI Class 2 stainless-steel bar supports.

2.4 CONCRETE MATERIALS

A. Cementious Material: Use the following cementitious materials, of the same type, brand, and source, throughout Project:

1. Portland Cement: ASTM C 150, Type II, gray. At Contractor’s option, supplement with the following:
   a. Fly Ash: ASTM C 618, Class F.
   b. Ground Granulated Blast-Furnace Slag: ASTM C 989, Grade 100 or 120.

B. Normal-Weight Aggregates: ASTM C 33, coarse aggregate or better, graded. Provide aggregates from a single source.

1. Maximum Coarse-Aggregate Size: 1 inch nominal.
2. Fine Aggregate: Free of materials with deleterious reactivity to alkali in cement.

C. Water: ASTM C 94/C 94M and potable.

2.5 ADMIXTURES

A. Air-Entraining Admixture: ASTM C 260.

B. Chemical Admixtures: Provide admixtures certified by manufacturer to be compatible with other admixtures and that will not contribute water-soluble chloride ions exceeding those permitted in hardened concrete. Do not use calcium chloride or admixtures containing calcium chloride.

1. Water-Reducing Admixture: ASTM C 494/C 494M, Type A.
2. Retarding Admixture: ASTM C 494/C 494M, Type B.
3. Water-Reducing and Retarding Admixture: ASTM C 494/C 494M, Type D.
4. High-Range, Water-Reducing Admixture: ASTM C 494/C 494M, Type F.
5. High-Range, Water-Reducing and Retarding Admixture: ASTM C 494/C 494M, Type G.
6. Plasticizing and Retarding Admixture: ASTM C 1017/C 1017M, Type II.

2.6 FIBER REINFORCEMENT

A. Synthetic Micro-Fiber: Monofilament or fibrillated polypropylene micro-fibers engineered and designed for use in concrete, complying with ASTM C 1116/C 1116M, Type III, 1/2 to 1-1/2 inches long.

1. Products: Subject to compliance with requirements, available products that may be incorporated into the Work include, but are not limited to, the following:
   a. Monofilament Micro-Fibers: Apply at a rate of 1 lb/cy.
      1) Grace Construction Products, W. R. Grace & Co.; Grace MicroFiber.
      2) Propex Concrete Systems Corp.; Fibermesh 150.
   b. Fibrillated Micro-Fibers: Apply at a rate of 1-1/2 lb/cy.
      1) Grace Construction Products, W. R. Grace & Co.; Grace Fibers.
      2) Propex Concrete Systems Corp.; Fibermesh 300.
      3) Buckeye Technologies Inc.; UltraFiber 500.

2.7 CURING MATERIALS

A. Evaporation Retarder: Waterborne, monomolecular film forming, manufactured for application to fresh concrete.

1. Products: Subject to compliance with requirements, available products that may be incorporated into the Work include, but are not limited to, the following:
   a. BASF Construction Chemicals - Building Systems; Confilm.
   b. Dayton Superior Corporation; Sure Film (J-74).
   c. Edoco by Dayton Superior; BurkeFilm.
   d. Euclid Chemical Company, an RPM company; Eucobar.

B. Clear, Solventborne, Membrane-Forming Curing Compound: ASTM C 309, Type 1, Class B, 30 percent solids, nondissipating, maximum moisture loss of 0.4 kg/m^2 when applied at a rate of 300 ft^2/gal. Use where exposed and/or sealed concrete will be the final finish.

1. Products: Subject to compliance with requirements, available products that may be incorporated into the Work include, but are not limited to, the following:
   a. BASF Construction Chemicals - Building Systems; Kure-N-Seal 30.
   b. Euclid Chemical Company, an RPM company; Super Rez-Seal.
   c. Meadows, W. R., Inc.; Sealtight CS-309-30.

2.8 CONCRETE MIXTURES, GENERAL

A. Prepare design mixtures for each type and strength of concrete, proportioned on the basis of laboratory trial mixture or field test data, or both, according to ACI 301.

   1. Use a qualified independent testing agency for preparing and reporting proposed mixture designs based on laboratory trial mixtures.

A. Cementious Materials: Limit percentage, by weight, of cementious materials other than portland cement in concrete as follows:

   1. Fly Ash: 25 percent.
   2. Ground Granulated Blast-Furnace Slag: 40 percent.

B. Admixtures: Use admixtures according to manufacturer's written instructions.

   1. Use water-reducing, high-range water-reducing or plasticizing admixture in concrete, as required, for placement and workability.
   2. Use water-reducing and retarding admixture when required by high temperatures, low humidity, or other adverse placement conditions.
   3. Use water-reducing admixture in pumped concrete, concrete required to be watertight, and concrete with a water-cementitious materials ratio below 0.50.

2.9 CONCRETE MIXTURES FOR BUILDING ELEMENTS

C. Proportion normal-weight concrete mixture as follows:

   1. Minimum Compressive Strength: 4000 psi at 28 days.
   2. Maximum Water-Cementious Materials Ratio: 0.45.
   3. Slump Limit: 3 inches, plus or minus 1 inch.
   4. Air Content: 6 percent, plus or minus 1 percent at point of delivery.
   5. Synthetic Micro-Fiber: Uniformly disperse in concrete mixture at manufacturer's recommended rate, but not less than 1.0 lb/cu. yd. or 1.5 lb/cu. yd. depending on fiber used.

2.10 FABRICATING REINFORCEMENT

A. Fabricate steel reinforcement according to CRSI's "Manual of Standard Practice”.

2.11 CONCRETE MIXING

A. Ready-Mixed Concrete: Measure, batch, mix, and deliver concrete according to ASTM C 94/C 94M, and furnish batch ticket information.
   1. When air temperature is between 85° and 90° F, reduce mixing and delivery time from 1-1/2 hours to 75 minutes; when air temperature is above 90° F, reduce mixing and delivery time to 60 minutes.

PART 3 - EXECUTION

3.1 FORMWORK

A. Design, erect, shore, brace, and maintain formwork, according to ACI 301, to support vertical, lateral, static, and dynamic loads, and construction loads that might be applied, until structure can support such loads.

B. Construct formwork so concrete members and structures are of size, shape, alignment, elevation, and position indicated, within tolerance limits of ACI 117.

C. Limit concrete surface irregularities, designated by ACI 347 as abrupt or gradual, as follows:

1. Class A, 1/8 inch for smooth-formed finished surfaces.
2. Class B, 1/4 inch for rough-formed finished surfaces.

D. Construct forms tight enough to prevent loss of concrete mortar.

E. Fabricate forms for easy removal without hammering or prying against concrete surfaces. Provide crush or wrecking plates where stripping may damage cast concrete surfaces. Provide top forms for inclined surfaces steeper than 1.5 horizontal to 1 vertical.

1. Install keyways, reglets, recesses, and the like, for easy removal.
2. Do not use rust-stained steel form-facing material.

F. Set edge forms, bulkheads, and intermediate screed strips for slabs to achieve required elevations and slopes in finished concrete surfaces. Provide and secure units to support screed strips; use strike-off templates or compacting-type screeds.

G. Provide temporary openings for cleanouts and inspection ports where interior area of formwork is inaccessible. Close openings with panels tightly fitted to forms and securely braced to prevent loss of concrete mortar. Locate temporary openings in forms at inconspicuous locations.

H. Chamfer exterior corners and edges of permanently exposed concrete.

I. Form openings, chases, offsets, sinkages, keyways, reglets, blocking, screeds, and bulkheads required in the Work. Determine sizes and locations from trades providing such items.

J. Clean forms and adjacent surfaces to receive concrete. Remove chips, wood, sawdust, dirt, and other debris just before placing concrete.

K. Retighten forms and bracing before placing concrete, as required, to prevent mortar leaks and maintain proper alignment.

L. Coat contact surfaces of forms with form-release agent, according to manufacturer's written instructions, before placing reinforcement.

3.2 EMBEDDED ITEMS

A. Place and secure anchorage devices and other embedded items required for adjoining work that is attached to or supported by cast-in-place concrete. Use setting drawings, templates, diagrams, instructions, and directions furnished with items to be embedded.

1. Install anchor rods, accurately located, to elevations required and complying with tolerances in Section 7.5 of AISC's "Code of Standard Practice for Steel Buildings and Bridges".

3.3 REMOVING AND REUSING FORMS

A. General: Formwork for sides of beams, walls, columns, and similar parts of the Work that does not support weight of concrete may be removed after cumulatively curing at not less than 50°F for 24 hours after placing concrete. Concrete has to be hard enough to not be damaged by form-removal operations and curing and protection operations need to be maintained.

1. Leave formwork for beam soffits, joists, slabs, and other structural elements that supports weight of concrete in place until concrete has achieved its 28-day design compressive strength.
2. Remove forms only if shores have been arranged to permit removal of forms without loosening or disturbing shores.

B. Clean and repair surfaces of forms to be reused in the Work. Split, frayed, delaminated, or otherwise damaged form-facing material will not be acceptable for exposed surfaces. Apply new form-release agent.

C. When forms are reused, clean surfaces, remove fins and laitance, and tighten to close joints. Align and secure joints to avoid offsets. Do not use patched forms for exposed concrete surfaces unless approved by Engineer.

3.4 STEEL REINFORCEMENT

A. General: Comply with CRSI's "Manual of Standard Practice" for placing reinforcement.

B. Clean reinforcement of loose rust and mill scale, earth, ice, and other foreign materials that would reduce bond to concrete.

C. Accurately position, support, and secure reinforcement against displacement. Locate and support reinforcement with bar supports to maintain minimum concrete cover.

D. Set wire ties with ends directed into concrete, not toward exposed concrete surfaces.

E. Install welded wire reinforcement in longest practicable lengths on bar supports spaced to minimize sagging. Lap edges and ends of adjoining sheets at least one mesh spacing. Offset laps of adjoining sheet widths to prevent continuous laps in either direction. Lace overlaps with wire.

3.5 JOINTS

A. General: Construct joints true to line with faces perpendicular to surface plane of concrete.

B. Construction Joints: Install so strength and appearance of concrete are not impaired, at locations indicated or as approved by Engineer.

1. Place joints perpendicular to main reinforcement. Continue reinforcement across construction joints unless otherwise indicated. Do not continue reinforcement through sides of strip placements of floors and slabs.
2. Form keyed joints as indicated. Embed keys at least 1-1/2 inches into concrete.

3. Locate joints for beams, slabs, joists, and girders in the middle third of spans. Offset joints in girders a minimum distance of twice the beam width from a beam-girder intersection.
4. Locate horizontal joints in walls and columns at underside of floors, slabs, beams, and girders and at the top of footings or floor slabs.
5. Space vertical joints in walls as indicated. Locate joints beside piers integral with walls, near corners, and in concealed locations where possible.
6. Use a bonding agent at locations where fresh concrete is placed against hardened or partially hardened concrete surfaces.
7. Use epoxy-bonding adhesive at locations where fresh concrete is placed against hardened or partially hardened concrete surfaces.

C. Contraction Joints in Slabs-on-Grade: Form weakened-plane contraction joints, sectioning concrete into areas as indicated. Construct contraction joints for a depth equal to at least one-fourth of concrete thickness as follows:

1. Sawed Joints: Form contraction joints with power saws equipped with shatterproof abrasive or diamond-rimmed blades. Cut 1/8-inch wide joints into concrete when cutting action will not tear, abrade, or otherwise damage surface and before concrete develops random contraction cracks.

3.6 CONCRETE PLACEMENT

A. Before placing concrete, verify that installation of formwork, reinforcement, and embedded items is complete and that required inspections have been performed.

B. Do not add water to concrete during delivery, at Project site, or during placement unless approved by Engineer.

C. Before test sampling and placing concrete, water may be added at Project site, subject to limitations of ACI 301.

1. Do not add water to concrete after adding high-range water-reducing admixtures to mixture.

D. Deposit concrete continuously in one layer or in horizontal layers of such thickness that no new concrete will be placed on concrete that has hardened enough to cause seams or planes of weakness. If a section cannot be placed continuously, provide construction joints as indicated. Deposit concrete to avoid segregation.

1. Deposit concrete in horizontal layers of depth to not exceed formwork design pressures and in a manner to avoid inclined construction joints.
2. Consolidate placed concrete with mechanical vibrating equipment according to ACI 301.
3. Do not use vibrators to transport concrete inside forms. Insert and withdraw vibrators vertically at uniformly spaced locations to rapidly penetrate placed layer and at least 6 inches into preceding layer. Do not insert vibrators into lower layers of concrete that have begun to lose plasticity. At each insertion, limit duration of vibration to time necessary to consolidate concrete and complete embedment of reinforcement and other embedded items without causing mixture constituents to segregate.

E. Deposit and consolidate concrete for floors and slabs in a continuous operation, within limits of construction joints, until placement of a panel or section is complete.

1. Consolidate and vibrate concrete during placement operations so concrete is thoroughly worked around reinforcement and other embedded items and into corners.
2. Maintain reinforcement in position on chairs during concrete placement.
3. Screed slab surfaces with a straightedge and strike off to correct elevations.

4. Slope surfaces uniformly to drains where required.
5. Begin initial floating using bull floats or darbies to form a uniform and open-textured surface plane, before excess bleedwater appears on the surface. Do not further disturb slab surfaces before starting finishing operations.

F. Cold-Weather Placement: Comply with ACI 306.1 and as follows. Protect concrete work from physical damage or reduced strength that could be caused by frost, freezing actions, or low temperatures.

1. When average high and low temperature is expected to fall below 40°F for three successive days, maintain delivered concrete mixture temperature within the temperature range required by ACI 301.
2. Do not use frozen materials or materials containing ice or snow. Do not place concrete on frozen subgrade or on subgrade containing frozen materials.
3. Do not use calcium chloride, salt, or other materials containing antifreeze agents or chemical accelerators unless otherwise specified and approved in mixture designs.

G. Hot-Weather Placement: Comply with ACI 301 and as follows:

1. Maintain concrete temperature below 90° F at time of placement. Chilled mixing water or chopped ice may be used to control temperature, provided water equivalent of ice is calculated to total amount of mixing water. Using liquid nitrogen to cool concrete is Contractor's option.
2. Fog-spray forms, steel reinforcement, and subgrade just before placing concrete. Keep subgrade uniformly moist without standing water, soft spots, or dry areas.

3.7 FINISHING FORMED SURFACES

A. Rough-Formed Finish: As-cast concrete texture imparted by form-facing material with tie holes and defects repaired and patched. Remove fins and other projections that exceed specified limits on formed-surface irregularities.

1. Apply to concrete surfaces not exposed to view.

B. Smooth-Formed Finish: As-cast concrete texture imparted by form-facing material, arranged in an orderly and symmetrical manner with a minimum of seams. Repair and patch tie holes and defects. Remove fins and other projections that exceed specified limits on formed-surface irregularities.

1. Apply to concrete surfaces exposed to view, to be covered with a coating or covering material applied directly to concrete.

C. Related Unformed Surfaces: At tops of walls, horizontal offsets, and similar unformed surfaces adjacent to formed surfaces, strike off smooth and finish with a texture matching adjacent formed surfaces. Continue final surface treatment of formed surfaces uniformly across adjacent unformed surfaces unless otherwise indicated.

3.8 FINISHING FLOORS AND SLABS

A. General: Comply with ACI 302.1R recommendations for screeding, restraightening, and finishing operations for concrete surfaces. Do not wet concrete surfaces.

B. Float Finish: Consolidate surface with power-driven floats or by hand floating if area is small or inaccessible to power driven floats. Restraighten, cut down high spots, and fill low spots. Repeat float passes and restraightening until surface is left with a uniform, smooth, granular texture.

1. Apply float finish to surfaces indicated.

C. Broom Finish: Apply a broom finish to horizontal surfaces of exterior concrete.

1. Immediately after float finishing, slightly roughen trafficked surface by brooming with fiber-bristle broom perpendicular to main traffic route. Coordinate required final finish with Engineer before application.

3.9 CONCRETE PROTECTING AND CURING

A. General: Protect freshly placed concrete from premature drying and excessive cold or hot temperatures. Comply with ACI 306.1 for cold-weather protection and ACI 301 for hot-weather protection during curing.

B. Evaporation Retarder: Apply evaporation retarder to unformed concrete surfaces if hot, dry, or windy conditions cause moisture loss approaching 0.2 lb/sq. ft. x h before and during finishing operations. Apply according to manufacturer's written instructions after placing, screeding, and bull floating or darbying concrete, but before float finishing.

C. Formed Surfaces: Cure formed concrete surfaces, including underside of beams, supported slabs, and other similar surfaces. If forms remain during curing period, moist cure after loosening forms. If removing forms before end of curing period, continue curing for the remainder of the curing period.

D. Unformed Surfaces: Begin curing immediately after finishing concrete. Cure unformed surfaces, including floors and slabs, and other surfaces.

E. Cure concrete according to ACI 308.1, as follows:

1. Curing Compound: Apply uniformly in continuous operation by power spray or roller according to manufacturer's written instructions. Recoat areas subjected to heavy rainfall within three hours after initial application. Maintain continuity of coating and repair damage during curing period.

3.10 CONCRETE SURFACE REPAIRS

A. Defective Concrete: Repair and patch defective areas when approved by Engineer. Remove and replace concrete that cannot be repaired and patched to Engineer's approval. Where slab edges curl to an extent that they are either functionally or architecturally unacceptable, the Contactor shall be responsible to provide corrective measures to the approval of the Engineer. This requirement shall remain in force throughout the warranty period.

B. Patching Mortar: Mix dry-pack patching mortar, consisting of one part portland cement to two and one-half parts fine aggregate passing a No. 16 sieve, using only enough water for handling and placing.

C. Repairing Formed Surfaces: Surface defects include color and texture irregularities, cracks, spalls, air bubbles, honeycombs, rock pockets, fins and other projections on the surface, and stains and other discolorations that cannot be removed by cleaning.

1. Immediately after form removal, cut out honeycombs, rock pockets, and voids more than 1/2 inch in any dimension to solid concrete. Limit cut depth to 3/4 inch. Make edges of cuts perpendicular to concrete surface. Clean, dampen with water, and brush-coat holes and voids with bonding agent. Fill and compact with patching mortar before bonding agent has dried. Fill form-tie voids with patching mortar or cone plugs secured in place with bonding agent.
2. Repair defects on surfaces exposed to view by blending white portland cement and standard portland cement so that, when dry, patching mortar will match surrounding color. Patch a test area at inconspicuous locations to verify mixture and color match before proceeding with patching. Compact mortar in place and strike off slightly higher than surrounding surface.
3. Repair defects on concealed formed surfaces that affect concrete's durability and structural performance as determined by Engineer.

D. Repairing Unformed Surfaces: Test unformed surfaces, such as floors and slabs, for finish and verify surface tolerances specified for each surface. Correct low and high areas. Test surfaces sloped to drain for trueness of slope and smoothness; use a sloped template.

1. Repair finished surfaces containing defects. Surface defects include spalls, popouts, honeycombs, rock pockets, crazing and cracks in excess of 0.01 inch wide or that penetrate to reinforcement or completely through unreinforced sections regardless of width, and other objectionable conditions.
2. After concrete has cured at least 14 days, correct high areas by grinding.
3. Correct localized low areas during or immediately after completing surface finishing operations by cutting out low areas and replacing with patching mortar. Finish repaired areas to blend into adjacent concrete.
4. Correct other low areas scheduled to receive floor coverings with a repair underlayment. Prepare, mix, and apply repair underlayment and primer according to manufacturer's written instructions to produce a smooth, uniform, plane, and level surface. Feather edges to match adjacent floor elevations.
5. Correct areas scheduled to remain exposed by removing and replacing concrete.
6. Repair defective areas, except random cracks and single holes 1 inch or less in diameter, by cutting out and replacing with fresh concrete. Remove defective areas with clean, square cuts and expose steel reinforcement with at least a 3/4-inch clearance all around. Dampen concrete surfaces in contact with patching concrete and apply bonding agent. Mix patching concrete of same materials and mixture as original concrete except without coarse aggregate. Place, compact, and finish to blend with adjacent finished concrete. Cure in same manner as adjacent concrete.
7. Repair random cracks and single holes 1 inch or less in diameter with patching mortar. Groove top of cracks and cut out holes to sound concrete and clean off dust, dirt, and loose particles. Dampen cleaned concrete surfaces and apply bonding agent. Place patching mortar before bonding agent has dried. Compact patching mortar and finish to match adjacent concrete. Keep patched area continuously moist for at least 72 hours.

E. Perform structural repairs of concrete, subject to Engineer's approval, using epoxy adhesive and patching mortar. Repair materials and installation not specified above may be used, subject to Engineer's approval.

3.11 FIELD QUALITY CONTROL

A. Testing and Inspecting: Owner will engage a special inspector and qualified testing and inspecting agency to perform field tests and inspections and prepare test reports.
B. Inspections:

1. Steel reinforcement placement.
2. Verification of use of required design mixture.

3. Concrete placement, including conveying and depositing.
4. Curing procedures and maintenance of curing temperature.

C. Concrete Tests: Testing of composite samples of fresh concrete obtained according to ASTM C 172 shall be performed according to the following requirements:

1. Testing Frequency: Obtain at least one composite sample for each 100 cu. yd. or fraction thereof of each concrete mixture placed each day.
2. Slump: ASTM C 143/C 143M; one test at point of placement for each composite sample, but not less than one test for each day's pour of each concrete mixture. Perform additional tests when concrete consistency appears to change.
3. Air Content: ASTM C 231, pressure method, for normal-weight concrete; one test for each composite sample, but not less than one test for each day's pour of each concrete mixture.
4. Concrete Temperature: ASTM C 1064/C 1064M; one test hourly when air temperature is 40° F and below and when 80° F and above, and one test for each composite sample.
5. Compression Test Specimens: ASTM C 31/C 31M.
   a. Cast and laboratory cure one set of three standard cylinder specimens for each composite sample.
   b. Cast and field cure one set of three standard cylinder specimens for each composite sample when field cure test specimens are required.
6. Compressive-Strength Tests: ASTM C 39/C 39M; test one specimen at 7 days, and one at 28 days, and hold the third specimen until needed.
7. Test results shall be reported in writing to Engineer, concrete manufacturer, and Contractor within 48 hours of testing. Reports of compressive-strength tests shall contain Project identification name and number, date of concrete placement, name of concrete testing and inspecting agency, location of concrete batch in Work, design compressive strength at 28 days, concrete mixture proportions and materials, compressive breaking strength, and type of break for both 7- and 28-day tests.
8. Nondestructive Testing: Impact hammer, sonoscope, or other nondestructive device may be permitted by Engineer but will not be used as sole basis for approval or rejection of concrete.
9. Additional Tests: Testing and inspecting agency shall make additional tests of concrete when test results indicate that slump, air entrainment, compressive strengths, or other requirements have not been met, as directed by Engineer. Testing and inspecting agency may conduct tests to determine adequacy of concrete by cored cylinders complying with ASTM C 42/C 42M or by other methods as directed by Engineer.
10. Additional testing and inspecting, at Contractor's expense, will be performed to determine compliance of replaced or additional work with specified requirements.
11. Correct deficiencies in the Work that test reports and inspections indicate do not comply with the Contract Documents.

END OF SECTION 03 30 00

SECTION 13 34 19 - METAL BUILDING SYSTEMS

PART 1 - GENERAL

1.1 SUMMARY

A. Section Includes:

1. Structural-steel framing.
2. Metal roof panels.
3. Metal wall panels.
4. Doors and frames.
5. Accessories.

1.2 SUBMITTALS

A. Product Data: For each type of metal building system component.

B. Shop Drawings: For metal building system components. Include plans, elevations, sections, details, and attachments to other work.

C. Samples: For each type of exposed finish required at both walls and roof.

D. Delegated-Design Submittal: For metal building systems indicated to comply with performance requirements and design criteria, including analysis data and calculations signed and sealed by the qualified professional engineer responsible for their preparation.

E. Welding certificates.

F. Metal Building System Certificates: For each type of metal building system, from manufacturer.

1. Letter of Design Certification: Signed and sealed by a qualified professional engineer. Include the following:
   a. Name and location of Project.
   b. Order number.
   c. Name of manufacturer.
   d. Name of Contractor.
   e. Building dimensions including width, length, height, and roof slope.
   f. Indicate compliance with AISC standards for hot-rolled steel and AISI standards for cold-rolled steel, including edition dates of each standard.
   g. Governing building code and year of edition.
   h. Design Loads: Include dead load, roof live load, collateral loads, roof snow load, deflection, wind loads/speeds and exposure, seismic design category or effective peak velocity-related acceleration/peak acceleration, and auxiliary loads (cranes).
   i. Load Combinations: Indicate that loads were applied acting simultaneously with concentrated loads, according to governing building code.
   j. Building-Use Category: Indicate category of building use and its effect on load importance factors.
   k. AISC Certification for Category MB: Include statement that metal building system and components were designed and produced in an AISC-Certified Facility by an AISC-Certified Manufacturer.

G. Warranties: Sample of special warranties.

1.3 QUALITY ASSURANCE

A. Manufacturer Qualifications: A qualified manufacturer and member of MBMA.

1. AISC Certification for Category MB: An AISC-Certified Manufacturer that designs and produces metal building systems and components in an AISC-Certified Facility.
2. Engineering Responsibility: Preparation of Shop Drawings and comprehensive engineering analysis by a qualified professional engineer.

B. Erector Qualifications: An experienced erector who specializes in erecting and installing work similar in material, design, and extent to that indicated for this Project and who is acceptable to manufacturer.

C. Welding Qualifications: Qualify procedures and personnel according to the following:

1. AWS D1.1/D1.1M, "Structural Welding Code - Steel."
2. AWS D1.3, "Structural Welding Code - Sheet Steel."

D. Structural Steel: Comply with AISC 360, "Specification for Structural Steel Buildings," for design requirements and allowable stresses.

E. Cold-Formed Steel: Comply with AISI's "North American Specification for the Design of Cold-Formed Steel Structural Members" for design requirements and allowable stresses.

1.4 WARRANTY

A. Special Warranty on Metal Panel Finishes: Manufacturer's standard form in which manufacturer agrees to repair finish or replace metal panels that show evidence of deterioration of factory-applied finishes within specified warranty period.

1. Finish Warranty Period: 20 years from date of Substantial Completion.

PART 2 - PRODUCTS

2.1 MANUFACTURERS

A. Manufacturers: The intent is to match the existing pre-engineered steel buildings on site. Subject to compliance with requirements, available manufacturers offering products that may be incorporated into the Work include, but are not limited to, the following:

1. American Buildings Company

2.2 METAL BUILDING SYSTEM PERFORMANCE

A. Delegated Design: Design metal building system, including comprehensive engineering analysis by a qualified professional engineer, using performance requirements and design criteria indicated.

B. Structural Performance: Metal building systems shall be designed according to procedures in MBMA's "Metal Building Systems Manual." ICBO Report 4018 “Design Wind Load Criteria For Metal Building Systems” will NOT be allowed. Design shall also comply with the 2006 IBC, ASCE 7-05, and the requirements presented in the Contract Drawings and Specifications.

1. Design Loads: As indicated on Drawings.
2. Deflection Limits: Design metal building system assemblies to withstand design loads with deflections no greater than the following:
   a. Purlins and Rafters: Vertical deflection of 1/240 of the span.
   b. Girts: Horizontal deflection of 1/240 of the span.
   c. Metal Roof Panels: Vertical deflection of 1/240 of the span.
   d. Metal Wall Panels: Horizontal deflection of 1/180 of the span.
   e. Design secondary-framing system to accommodate deflection of primary framing and construction tolerances, and to maintain clearances at openings.
3. Drift Limits: Engineer building structure to withstand design loads with drift limits no greater than the following:
   a. Lateral Drift: Maximum of 1/200 of the building height.
4. Metal panel assemblies shall withstand the effects of gravity loads and loads and stresses within limits and under conditions indicated according to ASTM E 1592.

C. Seismic Performance: Metal building systems shall withstand the effects of earthquake motions determined according to ASCE/SEI 7.

D. Thermal Movements: Allow for thermal movements resulting from change in ambient and surface temperatures by preventing buckling, opening of joints, overstressing of components, failure of joint sealants, failure of connections, and other detrimental effects. Base engineering calculations on surface temperatures of materials due to both solar heat gain and nighttime-sky heat loss.

E. Wind-Uplift Resistance: Provide metal roof panel assemblies that comply with UL 580 for Class 90.

2.3 STRUCTURAL-STEEL FRAMING

A. Primary Framing: Manufacturer's standard primary-framing system, designed to withstand required loads and specified requirements. Primary framing includes transverse and lean-to frames; rafter, rake, and canopy beams; sidewall, intermediate, end-wall, and corner columns; and wind bracing.

1. General: Provide frames with attachment plates, bearing plates, and splice members. Factory drill for field-bolted assembly.
2. Frame Configuration: Single gable.
3. Exterior Column Type: Tapered.
4. Rafter Type: Tapered.

B. End-Wall Framing: Manufacturer's standard primary end-wall framing fabricated for field-bolted assembly.

C. Secondary Framing: Manufacturer's standard secondary framing, including purlins, girts, eave struts, flange bracing, base members, gable angles, clips, headers, jambs, and other miscellaneous structural members. Unless otherwise indicated, fabricate framing from either cold-formed, structural-steel sheet or roll-formed, metallic-coated steel sheet, prepainted with coil coating.

D. Bolts: Provide plain-finish bolts for structural-framing components that are primed or finish painted. Provide zinc-plated or hot-dip galvanized bolts for structural-framing components that are galvanized.

E. Finish: Factory primed. Apply specified primer immediately after cleaning and pretreating. Touch-up field installed bolts, welds, defects, or abrasions caused by handling.

2.4 METAL ROOF PANELS

A. Tapered-Rib-Profile, Lap-Seam Metal Roof Panels: Formed with raised, trapezoidal major ribs and intermediate stiffening ribs symmetrically spaced between major ribs; designed to be installed by lapping side edges of adjacent panels and mechanically attaching panels to supports using exposed fasteners in side laps.

1. Material: Aluminum-zinc alloy-coated steel sheet, 26ga minimum nominal thickness.
   a. Exterior Finish: Fluoropolymer or Siliconized polyester.
   b. Custom Color: Teal – to match the nearby (and most recently constructed) Truck Shed Building.
2. Major-Rib Spacing: 12 inches o.c.
3. Panel Coverage: 36 inches.
4. Panel Height: 1.25 inches.

2.5 METAL WALL PANELS

A. Tapered-Rib-Profile Exposed-Fastener Metal Wall Panels: Formed with raised, trapezoidal major ribs and intermediate stiffening ribs symmetrically spaced between major ribs; designed to be installed by lapping side edges of adjacent panels and mechanically attaching panels to supports using exposed fasteners in side laps.

1. Material: Aluminum-zinc alloy-coated steel sheet, 26ga minimum nominal thickness.
   a. Exterior Finish: Fluoropolymer or Siliconized polyester.
   b. Custom Color: Teal – to match the nearby (and most recently constructed) Truck Shed Building.
2. Major-Rib Spacing: 12 inches o.c.
3. Panel Coverage: 36 inches.
4. Panel Height: 1.25 inches.

2.6 DOORS AND FRAMES

A. Swinging Personnel Doors and Frames: Metal building system manufacturer's standard doors and frames; prepared and reinforced at strike and at hinges to receive factory- and field-applied hardware according to BHMA A156 Series.

1. Hardware:
   a. Provide heavy-duty hardware for each door leaf, as follows:
      1) Hinges: BHMA A156.1. Three antifriction-bearing, standard-weight, full-mortise, stainless-steel or bronze, template-type hinges; 4-1/2 by 4-1/2 inches, with non-removable pin.
      2) Lockset: BHMA A156.2. Mortise, with lever handle type.
      3) Exit Device: BHMA A156.3. Touch- or push-bar type.
      4) Threshold: BHMA A156.21. Extruded aluminum.

5) Silencers: Pneumatic rubber; three silencers on strike jambs of single door frames and two silencers on heads of double door frames.
6) Closer: BHMA A156.4. Surface-applied, heavy-duty hydraulic type.
7) Weather Stripping: Vinyl applied to head and jambs, with vinyl sweep at sill.

B. Finishes for Personnel Doors and Frames:

1. Prime Finish: Factory-apply manufacturer's standard primer immediately after cleaning and pretreating.
2. Factory-Applied Paint Finish: Manufacturer's standard, complying with SDI A250.3 for performance and acceptance criteria.
   a. Color and Gloss: To match metal building wall panels.

2.7 ACCESSORIES

A. General: Provide accessories as standard with metal building system manufacturer and as specified. Fabricate and finish accessories at the factory to greatest extent possible, by manufacturer's standard procedures and processes. Comply with indicated profiles and with dimensional and structural requirements.

1. Form exposed sheet metal accessories that are without excessive oil-canning, buckling, and tool marks and that are true to line and levels indicated, with exposed edges folded back to form hems.

B. Roof Panel Accessories: Provide components required for a complete metal roof panel assembly including copings, fasciae, corner units, ridge closures, clips, sealants, gaskets, fillers, closure strips, and similar items. Match material and finish of metal roof panels unless otherwise indicated.

C. Wall Panel Accessories: Provide components required for a complete metal wall panel assembly including copings, fasciae, mullions, sills, corner units, clips, sealants, gaskets, fillers, closure strips, and similar items. Match material and finish of metal wall panels unless otherwise indicated.

D. Flashing and Trim: Formed from 0.022-inch nominal-thickness, metallic-coated steel sheet or aluminum-zinc alloy-coated steel sheet prepainted with coil coating; finished to match adjacent metal panels.

E. Pipe Flashing: Premolded, EPDM pipe collar with flexible aluminum ring bonded to base.

2.8 SOURCE QUALITY CONTROL

A. Testing Agency: Engage a qualified testing agency to evaluate product.

B. Special Inspector: Engage a qualified special inspector to perform the following tests and inspections and to submit reports. Special inspector will verify that manufacturer maintains detailed fabrication and quality-control procedures and will review the completeness and adequacy of those procedures to perform the Work.

1. Special inspections will not be required if fabrication is performed by manufacturer registered and approved by authorities having jurisdiction to perform such Work without special inspection.

a. After fabrication, submit copy of certificate of compliance to authorities having jurisdiction, certifying that Work was performed according to Contract requirements.

C. Testing: Test and inspect shop connections for metal buildings according to the following:

1. Bolted Connections: Shop-bolted connections shall be inspected according to RCSC's "Specification for Structural Joints Using ASTM A 325 or A 490 Bolts."
2. Welded Connections: In addition to visual inspection, shop-welded connections shall be tested and inspected according to AWS D1.1/D1.1M and the following inspection procedures, at inspector's option:
   a. Liquid Penetrant Inspection: ASTM E 165.
   b. Magnetic Particle Inspection: ASTM E 709; performed on root pass and on finished weld. Cracks or zones of incomplete fusion or penetration will not be accepted.
   c. Ultrasonic Inspection: ASTM E 164.
   d. Radiographic Inspection: ASTM E 94.

D. Product will be considered defective if it does not pass tests and inspections.

E. Prepare test and inspection reports.

2.9 FABRICATION

A. General: Design components and field connections required for erection to permit easy assembly.

1. Mark each piece and part of the assembly to correspond with previously prepared erection drawings, diagrams, and instruction manuals.
2. Fabricate structural framing to produce clean, smooth cuts and bends. Punch holes of proper size, shape, and location. Members shall be free of cracks, tears, and ruptures.

B. Tolerances: Comply with MBMA's "Metal Building Systems Manual" for fabrication and erection tolerances.

C. Primary Framing: Shop fabricate framing components to size and section, with baseplates, bearing plates, stiffeners, and other items required for erection welded into place. Cut, form, punch, drill, and weld framing for bolted field assembly.

D. Secondary Framing: Shop fabricate framing components to size and section by roll-forming or break-forming, with baseplates, bearing plates, stiffeners, and other plates required for erection welded into place. Cut, form, punch, drill, and weld secondary framing for bolted field connections to primary framing.

E. Metal Panels: Fabricate and finish metal panels at the factory to greatest extent possible, by manufacturer's standard procedures and processes, as necessary to fulfill indicated performance requirements. Comply with indicated profiles and with dimensional and structural requirements.

PART 3 - EXECUTION

3.1 ERECTION OF STRUCTURAL FRAMING

A. Erect metal building system according to manufacturer's written erection instructions and erection drawings.

B. Do not field cut, drill, or alter structural members without written approval from metal building system manufacturer's professional engineer.

C. Set structural framing accurately in locations and to elevations indicated, according to AISC specifications referenced in this Section. Maintain structural stability of frame during erection.

D. Base and Bearing Plates: Clean concrete- and masonry-bearing surfaces of bond-reducing materials, and roughen surfaces prior to setting plates. Clean bottom surface of plates.

1. Set plates for structural members on wedges, shims, or setting nuts as required.
2. Tighten anchor rods after supported members have been positioned and plumbed. Do not remove wedges or shims but, if protruding, cut off flush with edge of plate before packing with grout.
3. Promptly pack grout solidly between bearing surfaces and plates so no voids remain. Neatly finish exposed surfaces; protect grout and allow to cure. Comply with manufacturer's written installation instructions for shrinkage-resistant grouts.

E. Align and adjust structural framing before permanently fastening. Before assembly, clean bearing surfaces and other surfaces that will be in permanent contact with framing. Perform necessary adjustments to compensate for discrepancies in elevations and alignment.

1. Level and plumb individual members of structure.
2. Make allowances for difference between temperature at time of erection and mean temperature when structure will be completed and in service.

F. Primary Framing and End Walls: Erect framing level, plumb, rigid, secure, and true to line. Level baseplates to a true even plane with full bearing to supporting structures, set with double-nutted anchor bolts. Use grout to obtain uniform bearing and to maintain a level base-line elevation. Moist-cure grout for not less than seven days after placement.

1. Make field connections using high-strength bolts installed according to RCSC's "Specification for Structural Joints Using ASTM A 325 or A 490 Bolts" for bolt type and joint type specified.
   a. Joint Type: Snug tightened or pretensioned.

G. Secondary Framing: Erect framing level, plumb, rigid, secure, and true to line. Field bolt secondary framing to clips attached to primary framing.

1. Provide rake or gable purlins with tight-fitting closure channels and fasciae.
2. Locate and space wall girts to suit openings such as doors and windows.
3. Locate canopy framing as indicated.
4. Provide supplemental framing at entire perimeter of openings, including doors, windows, louvers, ventilators, and other penetrations of roof and walls.

H. Bracing: Install bracing in roof and sidewalls where indicated on erection drawings.

1. Tighten rod and cable bracing to avoid sag.
2. Locate interior end-bay bracing only where indicated.

I. Framing for Openings: Provide shapes of proper design and size to reinforce openings and to carry loads and vibrations imposed, including equipment furnished under mechanical and electrical work. Securely attach to structural framing.

J. Erection Tolerances: Maintain erection tolerances of structural framing within AISC 303.

3.2 METAL PANEL INSTALLATION, GENERAL

A. General: Anchor metal panels and other components of the Work securely in place, with provisions for thermal and structural movement.

1. Field cut metal panels as required for doors, windows, and other openings. Cut openings as small as possible, neatly to size required, and without damage to adjacent metal panel finishes.
   a. Field cutting of metal panels by torch is not permitted unless approved in writing by manufacturer.
2. Install metal panels perpendicular to structural supports unless otherwise indicated.
3. Flash and seal metal panels with weather closures at perimeter of openings and similar elements. Fasten with self-tapping screws.
4. Locate and space fastenings in uniform vertical and horizontal alignment.
5. Locate metal panel splices over, but not attached to, structural supports with end laps in alignment.
6. Lap metal flashing over metal panels to allow moisture to run over and off the material.

B. Lap-Seam Metal Panels: Install screw fasteners using power tools with controlled torque adjusted to compress EPDM washers tightly without damage to washers, screw threads, or metal panels. Install screws in predrilled holes.

1. Arrange and nest side-lap joints so prevailing winds blow over, not into, lapped joints. Lap ribbed or fluted sheets one full rib corrugation. Apply metal panels and associated items for neat and weathertight enclosure. Avoid "panel creep" or application not true to line.

C. Metal Protection: Where dissimilar metals contact each other or corrosive substrates, protect against galvanic action by painting contact surfaces with corrosion-resistant coating, by applying rubberized-asphalt underlayment to each contact surface, or by other permanent separation as recommended by metal roof panel manufacturer.

D. Joint Sealers: Install gaskets, joint fillers, and sealants where indicated and where required for weatherproof performance of metal panel assemblies. Provide types of gaskets, fillers, and sealants recommended by metal panel manufacturer.

1. Seal metal panel end laps with double beads of tape or sealant the full width of panel. Seal side joints where recommended by metal panel manufacturer.
2. Prepare joints and apply sealants as required by material manufacturer.

3.3 METAL ROOF PANEL INSTALLATION

A. General: Provide metal roof panels of full length from eave to ridge unless otherwise indicated or restricted by shipping limitations.

1. Install ridge caps as metal roof panel work proceeds.
2. Flash and seal metal roof panels with weather closures at eaves and rakes. Fasten with self-tapping screws.

B. Lap-Seam Metal Roof Panels: Fasten metal roof panels to supports with exposed fasteners at each lapped joint, at location and spacing recommended by manufacturer.

1. Provide metal-backed sealing washers under heads of exposed fasteners bearing on weather side of metal roof panels.

2. Provide sealant tape at lapped joints of metal roof panels and between panels and protruding equipment, vents, and accessories.
3. Apply a continuous ribbon of sealant tape to weather-side surface of fastenings on end laps and on side laps of nesting-type metal panels, on side laps of ribbed or fluted metal panels, and elsewhere as needed to make metal panels weatherproof to driving rains.
4. At metal panel splices, nest panels with minimum 6-inch end lap, sealed with butyl-rubber sealant and fastened together by interlocking clamping plates.

C. Metal Fascia Panels: Align bottom of metal panels and fasten with blind rivets, bolts, or self-drilling or self-tapping screws. Flash and seal metal panels with weather closures where fasciae meet soffits, along lower panel edges, and at perimeter of all openings.

3.4 METAL WALL PANEL INSTALLATION

A. General: Install metal wall panels in orientation, sizes, and locations indicated on Drawings. Install panels perpendicular to girts, extending full height of building, unless otherwise indicated. Anchor metal wall panels and other components of the Work securely in place, with provisions for thermal and structural movement.

1. Unless otherwise indicated, begin metal panel installation at corners with center of rib lined up with line of framing.
2. Shim or otherwise plumb substrates receiving metal wall panels.
3. When two rows of metal panels are required, lap panels 4 inches minimum.
4. When building height requires two rows of metal panels at gable ends, align lap of gable panels over metal wall panels at eave height.
5. Rigidly fasten base end of metal wall panels and allow eave end free movement due to thermal expansion and contraction. Predrill panels.
6. Flash and seal metal wall panels with weather closures at eaves, rakes, and at perimeter of all openings. Fasten with self-tapping screws.
7. Install screw fasteners in predrilled holes.
8. Install flashing and trim as metal wall panel work proceeds.
9. Apply elastomeric sealant continuously between metal base channel (sill angle) and concrete, and elsewhere as indicated; or, if not indicated, as necessary for waterproofing.
10. Align bottom of metal wall panels and fasten with blind rivets, bolts, or self-drilling or self-tapping screws.
11. Provide weatherproof escutcheons for pipe and conduit penetrating exterior walls.

B. Metal Wall Panels: Install metal wall panels on exterior side of girts. Attach metal wall panels to supports with fasteners as recommended by manufacturer.

3.5 DOOR AND FRAME INSTALLATION

A. General: Install doors and frames plumb, rigid, properly aligned, and securely fastened in place according to manufacturers' written instructions. Coordinate installation with wall flashings and other components. Seal perimeter of each door frame with elastomeric sealant used for metal wall panels.

B. Personnel Doors and Frames: Install doors and frames according to SDI A250.8.

C. Door Hardware: Mount units at heights indicated in DHI's "Recommended Locations for Architectural Hardware for Standard Steel Doors and Frames."

1. Install surface-mounted items after finishes have been completed on substrates involved.

2. Set units level, plumb, and true to line and location. Adjust and reinforce attachment substrates as necessary for proper installation and operation.
3. Drill and countersink units that are not factory prepared for anchorage fasteners. Space fasteners and anchors according to industry standards.

3.6 ACCESSORY INSTALLATION

A. General: Install accessories with positive anchorage to building and weathertight mounting, and provide for thermal expansion. Coordinate installation with flashings and other components.

1. Install components required for a complete metal roof panel assembly, including trim, copings, ridge closures, seam covers, flashings, sealants, gaskets, fillers, closure strips, and similar items.
2. Install components for a complete metal wall panel assembly, including trim, copings, corners, seam covers, flashings, sealants, gaskets, fillers, closure strips, and similar items.
3. Where dissimilar metals contact each other or corrosive substrates, protect against galvanic action by painting contact surfaces with corrosion-resistant coating, by applying rubberized-asphalt underlayment to each contact surface, or by other permanent separation as recommended by manufacturer.

B. Flashing and Trim: Comply with performance requirements, manufacturer's written installation instructions, and SMACNA's "Architectural Sheet Metal Manual." Provide concealed fasteners where possible, and set units true to line and level as indicated. Install work with laps, joints, and seams that will be permanently watertight and weather resistant.

1. Install exposed flashing and trim that is without excessive oil-canning, buckling, and tool marks and that is true to line and levels indicated, with exposed edges folded back to form hems. Install sheet metal flashing and trim to fit substrates and to result in waterproof and weather-resistant performance.
2. Expansion Provisions: Provide for thermal expansion of exposed flashing and trim. Space movement joints at a maximum of 10 feet with no joints allowed within 24 inches of corner or intersection. Where lapped or bayonet-type expansion provisions cannot be used or would not be sufficiently weather resistant and waterproof, form expansion joints of intermeshing hooked flanges, not less than 1 inch deep, filled with mastic sealant (concealed within joints).

C. Pipe Flashing: Form flashing around pipe penetration and metal roof panels. Fasten and seal to panel as recommended by manufacturer.

3.7 FIELD QUALITY CONTROL

A. Special Inspections: Owner will engage a qualified special inspector to perform special inspections.

B. Testing Agency: Owner will engage a qualified testing agency to perform tests and inspections.

C. Tests and Inspections:

1. High-Strength, Field-Bolted Connections: Connections shall be inspected during installation according to RCSC's "Specification for Structural Joints Using ASTM A 325 or A 490 Bolts."
2. Welded Connections: In addition to visual inspection, field-welded connections shall be tested and inspected according to AWS D1.1/D1.1M and the following inspection procedures, at inspector's option:
   a. Liquid Penetrant Inspection: ASTM E 165.

b. Magnetic Particle Inspection: ASTM E 709; performed on root pass and on finished weld. Cracks or zones of incomplete fusion or penetration will not be accepted.
c. Ultrasonic Inspection: ASTM E 164.
d. Radiographic Inspection: ASTM E 94.

D. Product will be considered defective if it does not pass tests and inspections.

E. Prepare test and inspection reports.

END OF SECTION 13 34 19

SECTION 31 20 00 - STRUCTURAL EARTHWORK

PART 1 - GENERAL

1.1 DESCRIPTION

A. Provide all necessary site stripping, excavation, fill, backfill, and grading, as specified herein, and as noted on the Drawings.

1.2 QUALITY ASSURANCE

A. Geotechnical Engineer: The Owner will retain and pay the expenses of a Geotechnical Engineer for performing certain functions specified in the Contract Documents. The Geotechnical Engineer shall communicate only with the Owner and the Engineer, and with the Contractor as directed by the Engineer. The Engineer shall relay any appropriate instructions to the Contractor within the provisions of the Contract Documents.

B. Testing Agency: Local testing laboratory with a minimum of three years experience in testing soil materials. All reports prepared by the Testing Agency shall be signed by a Professional Engineer registered to practice as a Civil Engineer in the state of Nevada.

C. Testing Laboratory shall have the same required qualifications as the Testing Agency but shall be retained by the Owner. Testing laboratory will make field tests as directed of the "in place" materials to assure conformance with Contract Documents.

D. Source Quality Control: Prior to delivery to site, the Testing Agency shall test all imported soil material for conformance with Contract Documents. Also on site fill materials shall be approved by the Geotechnical Engineer prior to placing.

E. Use adequate numbers of skilled workmen who are thoroughly trained and experienced in the necessary crafts and who are completely familiar with the specified requirements and the methods needed for proper performance of the Work of this Section.

F. Use equipment adequate in size, capacity, and numbers to accomplish the Work of this Section in a timely manner.

G. In addition to complying with the requirements of governmental agencies having jurisdiction, comply with the directions of the Geotechnical Engineer, as approved by the Engineer.

H. Reference Standards:

1. ASTM - American Society for Testing and Materials.
   a. D 422 - Particle Size Analysis of Soils.
   b. D 424 – Plastic Limit and Plasticity Index of Soils.
   c. D 1556 - Standard Test Method for Density of Soil in Place by the Sand Cone Method.
   d. D 1557 - Standard Test Methods for Moisture-Density Relations of Soils Using 10-pound Rammer and 18-inch Drop.
   e. D 2487 - Classification of Soils for Engineering Purposes.
   f. D 3017 - Moisture Content of Soil and Soil-aggregate in place by Nuclear Methods.
2. State of Nevada, Standard Specifications for Road and Bridge Construction.

1.3 SUBMITTALS

A. Test Reports: Submit test reports on proposed imported materials, and compaction test reports on all compacted materials.

1.4 JOB CONDITIONS

A. Existing Conditions:

1. Information shown on the Drawings regarding existing site conditions is believed to be correct, but it is not guaranteed. Contractors shall visit the site for necessary information and data regarding present ground levels, ground water level, conditions of property, locations and size of obstructions, and access, etc.

B. Protection:

1. Provide, and maintain all barricades, shoring, bracing, etc., as required by federal and State codes. Contractor shall assume all responsibility for damage to utilities, streets, etc., that may be caused by this Work.
2. Maintain temporary drainage routes during construction so that rainfall or snow-melt will drain from site and not accumulate or pond.

C. Sequencing, Scheduling and Coordination: The Contractor may schedule and sequence his operations as he desires to optimize the Work of this Section.

PART 2 - PRODUCTS

2.1 MATERIALS

A. For structural fill and backfill use imported or approved on-site materials which are non-expansive conforming to the following: Granular soil, free of organic material and debris and free of clods, lumps and rocks larger than 4-inch diameter. Material shall be reasonably well graded with 70 to 100-percent passing the ¾” sieve, 15 to 65-percent passing the #40 sieve and 5 to 20-percent passing the #200 sieve. The maximum liquid limit shall be 35 and maximum plastic index shall be 12. All material shall be approved by the Geotechnical Engineer prior to delivery and use.

B. Site non-structural fill may be any on site materials free of debris and rocks larger than 6-inch diameter or imported materials as specified in “A” above.

C. Drain Rock: Provide clean, lightweight, crushed 1” minus rock or open graded drain rock.

D. Aggregate Base for interior concrete slabs, exterior concrete slabs, and sidewalk base: Comply with Nevada Highway Department Type 2, Class B, Aggregate Base.

E. Provide other materials, not specifically described but required for a complete and proper installation, as selected by the Contractor subject to the approval of the Engineer.

PART 3 - EXECUTION

3.1 SURFACE CONDITIONS

A. Examine the areas and conditions under which work of this Section will be performed. Correct conditions detrimental to timely and proper completion of the Work. Do not proceed until unsatisfactory conditions are corrected.

3.2 PREPARATION

A. Lay out the building and all site work in conformance with Contract Documents. Establish necessary benchmarks and protect them until completion of the Work.

3.3 PERFORMANCE

A. Perform no earthwork during inclement weather, or when excessive moisture is present in the fill material.

B. Should rainfall or snow-melt occur following footing excavation and prior to pouring footing, dry the excavation thoroughly and re-compact the soils below the footing prior to placing footing.

C. Use no frozen fill. Place no fill on frozen ground.

D. Remove and replace in-place fills which are frozen prior to the placement of any additional fill.

E. When rains or snow-melt interrupt fill operations, inspect the surface before more fill is placed to assure that detrimental conditions do not exist.

F. Clearing and Grubbing: The areas to receive compacted fill for support of foundations, paving, and slabs shall be stripped of all debris, fill soils, crop growth, vegetation, surface trash, roots larger than 2 inches in diameter, and incidental topsoils as determined by the Geotechnical Engineer.

G. Stripping: The upper 4"± minimum, as determined by the Geotechnical Engineer, shall be removed from structural areas prior to placement of footings, aggregate base, or structural fill. Also any existing debris and former construction shall be completely removed from the site.

H. Excavation:

1. Excavate as necessary to obtain required subgrade elevations.
2. Excavate as necessary to allow room for placement and removal of foundation formwork.
3. Form all footings with wood, metal, or earth forms as specified in Section “Cast-in-place Concrete”.

I. Compaction of Exposed Soils: The soils exposed by excavations, which are to receive compacted fill or footings, shall be scarified, watered or dried as necessary to obtain the proper moisture content as directed by the Geotechnical Engineer, and the upper 8” minimum shall be compacted to at least 95-percent relative compaction below improvements and 90-percent relative compaction outside of improvements. If, in the opinion of the Geotechnical Engineer, the existing soils at the bottom of the footing excavations are at 95-percent relative compaction or

above, then these soils may not require scarification and recompaction, as determined by the Geotechnical Engineer.

J. Fill and Backfill:

1. Fill as required to obtain required subgrades.
2. Backfill foundations and stemwalls.
3. Place fill and backfill materials in 8-inch thick maximum loose layers. In general, place in horizontal layers extending uniformly over the area to be filled. Compact each layer as specified prior to placing the subsequent layer.
4. Water or dry fill materials as necessary to obtain the proper moisture content as directed by the Geotechnical Engineer. These soils shall then be compacted to the following minimum densities, based on ASTM D1557 Method A or C.
   a. Structural fill – 95-percent dry density for fills under footings or slabs on grade.
   b. Non-structural fill on site – 90-percent dry density.

K. Aggregate Base and Drainrock:

1. Provide the aggregate base and compact to at least 95 percent under pavement and other exterior and interior slabs. The subgrade below this base shall also be compacted to 95 percent relative compaction.
2. Establish finish grade of base at the required elevation with a level uniform surface varying not more than 1/2-inch when measured in any direction with a 10-foot straight edge.
3. Compact drainrock by two passes at right angles with an approved vibratory compactor.

L. Site Grading:

1. After completion of all excavation, fill and backfill, rake surface to a 4-inch depth to remove all rocks and debris in excess of 2-inches in diameter. Remove this material from the site.
2. Grade all areas including excavated and filled sections and transition areas to obtain a finished surface, reasonably smooth, compacted, and free from irregular surface changes. Leave all ditches, swales, and gutters finished to drain readily.

3.4 FIELD QUALITY CONTROL

A. Soil Compaction Test: The Owner will pay the testing Laboratory for the first compaction test at any test location. All retests required because fill materials were not compacted to the required density shall be paid for by the Contractor.

B. The Geotechnical Engineer shall review all sitework and footing excavations before any concrete is cast, and submit a letter of compliance to the Engineer. The Geotechnical Engineer shall review all backfill materials prior to placement and observe backfill operations. A letter of compliance shall be submitted to the Engineer stating that fills have been constructed per the requirements of these Specifications.

C. Provide at least the following tests to the approval of the Geotechnical Engineer:

1. At paved areas, at least one (1) field density test for every 4000 sq. ft. of paved area, but not less than three (3) tests.
2. In each compacted fill layer, one (1) field density test for every 4000 sq. ft. of overlaying area, but not less than three (3) tests.

D. If, in the Geotechnical Engineer's opinion, based on reports of the testing laboratory, subgrade or fills have been placed below specified density, provide additional compacting and testing.

3.5 MAINTENANCE

A. Protection of newly graded areas:

1. Protect newly graded areas from traffic and erosion, and keep free from trash and weeds.
2. Repair and reestablish grades in settled, eroded, and rutted areas to the specified tolerances.

B. Where completed compacted areas are disturbed by subsequent construction operations or adverse weather, scarify the surface, reshape, and compact to the required density prior to further construction.

END OF SECTION 31 20 00

STRUCTURAL CALCULATIONS

FOR

Carson City Public Works Dept.
Salt and Cinder Storage Building
3505 Butti Way
Carson City, Nevada 89701

REGISTERED PROFESSIONAL ENGINEER - STATE OF NEVADA
CHRISTOPHER M. ROPER
EXP. 12-31-11
CIVIL & STRUCTURAL
No. 15032
6/10/11

HYYTINEN ENGINEERING
5458 Longley Lane, Suite B
Reno, NV 89511
775/826-3019 775/826-3076 FAX
www.hyytinenengineering.com

HE#3-11

Hyytinen Engineering
5458 Longley Lane, Suite B
Reno, NV 89511
Ph (775) 826-3019
Fax 9775) 826-3076
www.hyytinenengineering.com

JOB 3-11

SHEET NO. 1 OF

CALCULATED BY CWR DATE 1/19/11

CHECKED BY DATE

BASIS OF DESIGN

CODE
2006 IBC

OCCUPANCY CATEGORY
II

SNOW LOADS	
Elevation	< 4700'
Ground Snow Load, Pg	30psf
Ce	0.90
Ct	1.20
Is	1.00
Flat Roof Snow Load, Pf	23psf
WIND LOADS	
Basic Wind Speed, V3s	100mph
Exposure	C
Iw	1.00
SEISMIC LOADS	
Ss	1.601
S1	0.600
Site Class	D
Sds	1.07
Sd1	0.60
Ie	1.00
Seismic Design Category	D
SOILS	
2006 IBC Table 1804.2	Class 4 materials assumed
Maximum Allowable Soil Bearing	1500psf w/ 1/3 increase for wind & seismic
Coefficient of Friction	0.25
Passive Pressure	150pcf
Frost Depth	24"

Carson City Building Division

Kevin Gattis, Chief Building Official

ADOPTED CODES AND DESIGN CRITERIA

ADOPTED CODES
(Effective Date - January 1, 2008)

- 2007 Northern Nevada Amendments*
- 2006 International Building Code ('06 IBC)
- 2006 International Residential Code ('06 IRC)
- 2006 International Existing Building Code ('06 IEBC)
- 2006 International Energy Conservation Code ('06 IECC)
- 2006 International Fire Codes ('06 IFC)
- 2006 Uniform Mechanical Code ('06 UMC)
- 2006 Uniform Plumbing Code ('06 UPC)
- 2005 National Electrical Code ('05 NEC)
- 2003 ICC/ANSI A117.1 (For accessible design)

* - Carson City, Lyon County, Washoe County, City of Fernley, City of Reno, and City of Sparks, with input from interested members of the construction and design communities drafted regional amendments to the adopted codes in the form of the "2007 Northern Nevada Amendments". Copies of the 2007 Northern Nevada Amendments are available online at www.nnicc.org, through the Northern Nevada Chapter of the International Council (NNICC), under the 'Multiple Jurisdictions" page.

DESIGN CRITERIA

Climate and Geographic Design Criteria -

- Roof Snow Load – See Below
- Wind Speed (mph) – 100 mph (3-gust), with Exposure defaulting to "C" per ASCE 7-05
- Seismic Design Category – "E" (Unless a site specific analysis is performed and approved)
- Frost Depth – 24" minimum
- Winter Design Temperature – 10
- Ice Shield Under Layment Required – Yes > 5,500' elevation
- Flood Hazards – Consult with the Engineering Division of Development Services
- Air Freezing Index – 500
- Mean Annual Temperature – 50
- Subject to Damage From –
  - Weathering – Severe
  - Termite – Moderate/Heavy
  - Decay – None/Slight

108 E. Proctor St., Carson City, NV 89701
(775) 887-2310

GROUND SNOW LOADS P_g, FOR CARSON CITY

Elevation In Feet	WEST of U.S. Hwy 395 P_g (Pounds Per Square Foot)	EAST of U.S. Hwy 395 P_g (Pounds Per Square foot)
4,500	30	30
5,000	30	30
5,100	41	31
5,200	52	33
5,300	64	34
5,400	75	35
5,500	86	37
6,000	142	43
6,500	171	43
7,000	200	57
7,500	215	57
8,000	229	86
8,500	243	86
9,000	271	114
9,500	300	142
10,000	357	142

Footnotes:

1. Drift load design in the 30-psf zones may utilize ASCE 7 -05 table C7-1 ground snow values.
2. The final roof design loads shall not be less than 20 psf after all reductions are factored
3. Intermediate values may be interpolated by proportion.

The Carson City Building Division requires that all projects located above 5,099', or located within an area with a 40 psf or greater snow load, are to be designed by a Nevada licensed Architect or Engineer, using the structural provisions of the International Building Code (IBC).

Hyytinen Engineering
5458 Longley Lane, Suite B
Reno, NV 89511
Ph (775) 826-3019
Fax 9775) 826-3076
www.hyytinenengineering.com

JOB 3-11

SHEET NO. 4 OF

CALCULATED BY CWR DATE 1/19/11

CHECKED BY DATE

SNOW

Ground Snow Load, Pg =	**30**	psf, per local requirements	
Ce =	**0.9**	ASCE 7, Table 7-2	
Ct =	**1.2**	ASCE 7, Table 7-3	Cold Roof
Is =	**1.0**	ASCE 7, Table 7-4	
Pf = 0.7(Ce)(Ct)(Is)(Pg) =	22.7	psf	
Pf min =	22.7	psf	
γ = 0.13Pg + 14 ≤ 30psf =	17.9	pcf	
hb = Pf / γ =	1.27	ft	

SEISMIC — SITE CLASS D (TYPICAL)

Conterminous 48 States
2006 International Building Code
Latitude = 39.1653
Longitude = -119.73
Spectral Response Accelerations Ss and S1
Ss and S1 = Mapped Spectral Acceleration Values
Site Class B - Fa = 1.0 ,Fv = 1.0
Data are based on a 0.009999999776482582 deg grid spacing

Period (sec)	Sa (g)
0.2	1.601 (Ss, Site Class B)
1.0	0.600 (S1, Site Class B)

< 0.75 ∴ SDC "E" IS NOT REQ'D

Conterminous 48 States
2006 International Building Code
Latitude = 39.1653
Longitude = -119.73
Spectral Response Accelerations SMs and SM1
SMs = Fa x Ss and SM1 = Fv x S1
Site Class D - Fa = 1.0 ,Fv = 1.5

Period (sec)	Sa (g)
0.2	1.601 (SMs, Site Class D)
1.0	0.900 (SM1, Site Class D)

Conterminous 48 States
2006 International Building Code
Latitude = 39.1653
Longitude = -119.73
Design Spectral Response Accelerations SDs and SD1
SDs = 2/3 x SMs and SD1 = 2/3 x SM1
Site Class D - Fa = 1.0 ,Fv = 1.5

Period (sec)	Sa (g)		
0.2	1.067 (SDs, Site Class D)	→ SDC "D"	IBC TABLE 1613.5.6(1)
1.0	0.600 (SD1, SITE CLASS D)	→ SDC "D"	IBC TABLE 1613.5.6(2)

Hyytinen Engineering
5458 Longley Lane, Suite B
Reno, NV 89511
Ph (775) 826-3019
Fax 9775) 826-3076
www.hyytinenengineering.com

JOB 3-11

SHEET NO. 6 OF

CALCULATED BY CWR DATE 1/19/11

CHECKED BY DATE

WIND

Basic Wind Speed, V =	**100**	mph, 3s gust per local requirements
Exposure =	**C**	per local requirements
Iw =	**1.00**	ASCE 7, Table 6-1
z =	**25**	ft, mean roof height
Kz =	**0.94**	ASCE 7, Table 6-3
Kzt =	**1.00**	ASCE 7, Sec. 6.5.7.2
Kd =	**0.85**	ASCE 7, Table 6-4
qz = 0.00256(Kz)(Kzt)Kd)(V2)(Iw) =	20.5	psf

$p = qh[(GC_{pf}) - (GC_{pi})]$ EQ. 6-18 METHOD 2 ANALYTICAL

$GC_{pf} = (0.4 + 0.29)$ (TYP. INT. HORIZ. SURF. 1&4 @ $\theta = 0\text{-}5^\circ$) FIG. 6-10
$= 0.69$

$GC_{pi} = \pm 0.18$ (ENCLOSED TRANSV. DIR.) FIG. 6-5

$\therefore p = 20.5[0.69 + 0.18] = 17.8$ psf

(OR) $p = \lambda K_{zt} I p_{30}$ EQ. 6-1 METHOD 1 SIMPLIFIED

$= 1.35(1.0)(1.0)(10.5) = 14.2$ psf TYP.

$= 1.35(1.0)(1.0)(15.9) = 21.5$ psf EDGE

USE 20psf FOR METAL BLDG TABLES FOR APPROXIMATION

LRF SERIES

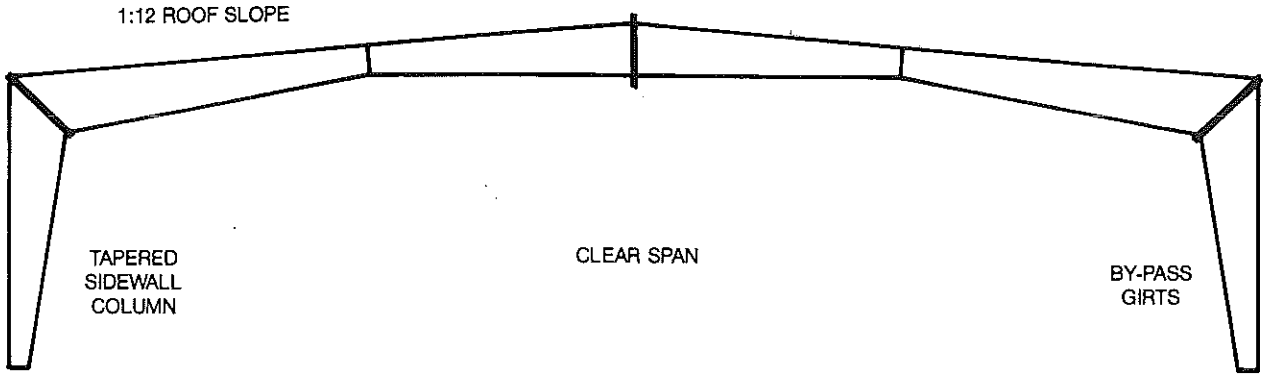

SERIES STANDARDS

Widths:	30 to 160 ft.	
Eave Heights:	10 to 30 ft.	
Roof Slope:	1:12	
Bay Spacings:	20, 25, and 30 ft.	
Loads:	A - 20* PSF Live	15 PSF Wind
	B - 20*	25
	C - 20	25
	D - 25	15
	E - 30	20
	H - 40	20

USE 'E' FOR 23psf SNOW & 20psf WIND

*12 PSF frame live load

SPECIFICATIONS

Low, 1:12 roof slope, rigid frame series - This building has a tapered depth beam and sidewall columns. The frame spans the width of the building supporting the secondary framing and the roof and wall coverings. Frames are spaced at pre-determined intervals, or bay spacings, for the length of the building. The secondary roof framing, or purlins, are 8″ or 9 1/2″ Z sections as required by design. The secondary wall framing or girts, also 8″ or 9 1/2″ Z sections, bypass the column for maximum strength and economy. Upon request, non-standard widths, eave heights, bay spacings, and loads are available.

(8)

1:12 Roof Slope

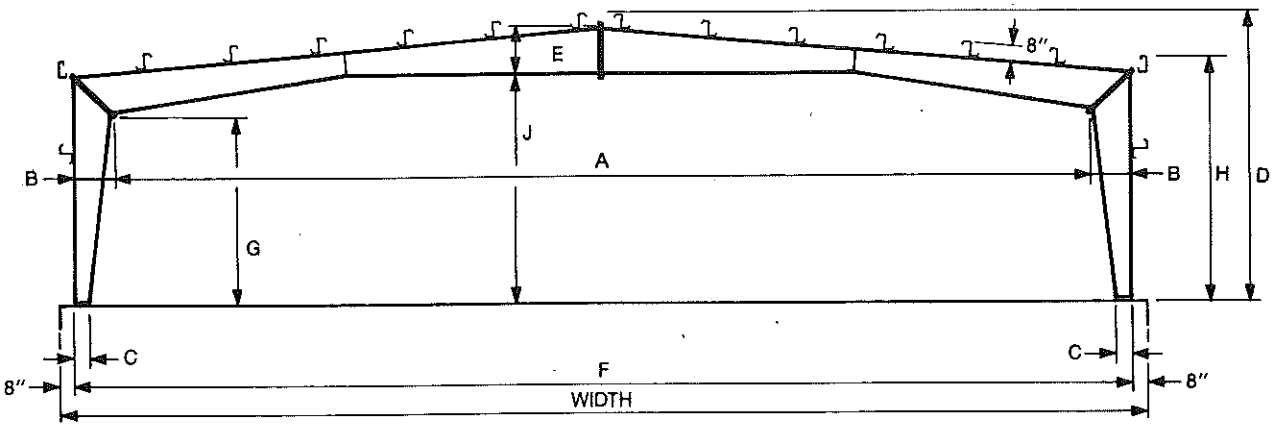

25' BAYS

≈ 20' CLEAR

NOMINAL SIZE		DIMENSIONS (ALL FIGURES ROUNDED)								
WIDTH	EAVE	H	A	B	C	D	E	F	G	J
100'	14'	13'-10"	90'-10"	3'-11"	1'-1"	18'-0"	2'-10"	98'-8"	9'-7"	14'-6"
	16'	15'-10"	90'-10"	3'-11"	1'-1"	20'-0"	2'-10"	98'-8"	11'-7"	16'-5"
	20'	19'-10"	90'-10"	3'-11"	1'-1"	24'-0"	2'-10"	98'-8"	15'-7"	20'-5"
	24'	23'-10"	90'-10"	3'-11"	1'-1"	28'-0"	2'-10"	98'-8"	19'-7"	24'-5"
120'	14'	13'-10"	109'-10"	4'-5"	1'-1"	18'-10"	3'-4"	118'-8"	9'-2"	14'-10"
	16'	15'-10"	109'-10"	4'-5"	1'-1"	20'-10"	3'-4"	118'-8"	11'-2"	16'-10"
	20'	19'-10"	109'-10"	4'-5"	1'-1"	24'-10"	3'-4"	118'-8"	15'-2"	20'-10"
	24'	23'-10"	109'-10"	4'-5"	1'-1"	28'-10"	3'-4"	118'-8"	19'-2"	24'-10"
	30'	29'-10"	109'-10"	4'-5"	1'-1"	34'-10"	3'-4"	118'-8"	25'-2"	30'-10"
130'	20'	19'-10"	119'-0"	4'-10"	1'-4"	25'-3"	3'-5"	128'-8"	14'-9"	21'-2"
	24'	23'-10"	119'-0"	4'-10"	1'-1"	29'-3"	3'-5"	128'-8"	18'-9"	25'-2"
	30'	29'-10"	119'-0"	4'-11"	1'-1"	35'-3"	3'-5"	128'-8"	24'-9"	31'-2"
140'	20'	19'-10"	128'-11"	4'-11"	1'-3"	25'-8"	3'-8"	138'-8"	14'-9"	21'-4"
	24'	23'-10"	128'-11"	4'-11"	1'-3"	29'-8"	3'-8"	138'-8"	18'-9"	25'-4"
	30'	29'-10"	128'-11"	4'-11"	1'-3"	35'-8"	3'-8"	138'-8"	24'-9"	31'-4"
150'	20'	19'-10"	138'-11"	4'-11"	1'-8"	26'-1"	3'-9"	148'-8"	14'-9"	21'-8"
	24'	23'-10"	138'-9"	5'-0"	1'-8"	30'-1"	3'-9"	148'-8"	18'-8"	25'-8"
	30'	29'-10"	138'-9"	5'-0"	1'-8"	36'-1"	3'-9"	148'-8"	24'-7"	31'-8"
160'	20'	19'-10"	148'-9"	5'-0"	1'-8"	26'-6"	3'-9"	158'-8"	14'-8"	22'-1"
	24'	23'-10"	148'-9"	5'-0"	1'-8"	30'-6"	3'-9"	158'-8"	18'-8"	26'-1"
	30'	29'-10"	148'-5"	5'-2"	1'-8"	36'-6"	3'-9"	158'-8"	24'-6"	32'-1"

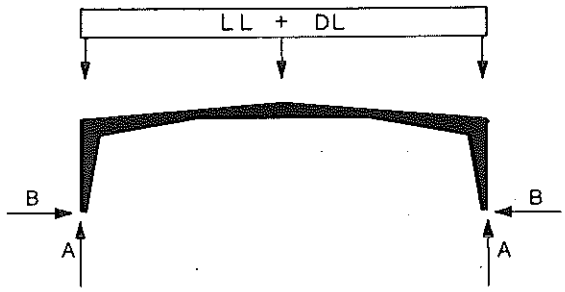

LIVE LOAD PLUS DEAD LOAD

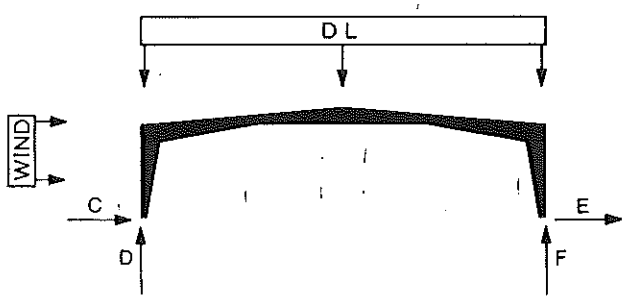

WIND LOAD PLUS DEAD LOAD

RIGID FRAME REACTIONS

BUILDING SIZE		20′ BAY REACTIONS						25′ BAY REACTIONS						ANCHOR BOLTS			
														QTY.		SIZE	
WIDTH	EAVE	A	B	C	D	E	F	A	B	C	D	E	F	20′	25′	20′	25′
100′	14′	34.5	43.8	-21.8	-18.2	18.5	-13.6	43.1	53.2	-26.9	-23.3	22.8	-17.1	4	6	1¼″	1¼″
	16′	34.5	38.2	-19.5	-18.7	15.4	-13.5	43.1	47.1	-24.1	-23.4	18.9	-16.9	4	4	1¼″	1¼″
	20′	34.5	30.2	-16.5	-19.0	10.7	-13.3	43.1	37.0	-20.3	-23.7	13.1	-16.6	4	4	1″	1¼″
	24′	34.5	24.7	-14.6	-19.3	7.26	-13.0	43.1	30.2	-18.1	-24.1	8.9	-16.2	4	4	1″	1″
120′	14′	41.4	61.3	-29.9	-22.2	26.7	-16.5	51.8	77.3	-37.6	-27.8	33.7	-20.6	6	6	1¼″	1½″
	16′	41.4	52.9	-26.3	-22.3	22.3	-16.4	51.8	67.4	-33.5	-27.9	28.5	-20.5	6	6	1¼″	1¼″
	20′	41.4	42.8	-22.3	-22.5	16.7	-16.2	51.8	53.3	-27.8	-28.1	20.8	-20.2	4	6	1¼″	1¼″
	24′	41.4	35.0	-19.3	-22.8	12.1	-15.9	51.8	44.2	-24.3	-28.5	15.3	-19.9	4	4	1¼″	1¼″
	30′	41.4	27.8	-16.9	-23.3	7.3	-15.4	51.8	34.6	-21.1	-29.1	9.1	-19.3	4	4	1″	1¼″
130′	20′	45.5	51.4	-25.2	-23.7	19.7	-17.0	56.9	63.8	-31.2	-29.6	18.4	-21.2	6	6	1¼″	1¼″
	24′	45.5	42.8	-22.0	-23.9	14.9	-16.8	56.9	61.5	-27.3	-29.8	11.6	-20.4	4	6	1¼″	1¼″
	30′	45.5	33.6	-18.8	-24.3	9.3	-16.3	56.9	41.8	-23.5	-30.4	28.9	-20.4	4	4	1¼″	1¼″
140′	20′	49.0	59.4	-28.7	-25.4	23.2	-18.4	61.3	74.1	-35.8	-31.7	29.0	-23.0	6	6	1¼″	1½″
	24′	49.0	49.3	-24.8	-25.6	17.8	-18.2	61.3	61.5	-31.0	-32.0	22.2	-22.7	6	6	1¼″	1¼″
	30′	49.0	38.8	-21.2	-26.0	11.7	-17.7	61.3	48.8	-26.5	-32.5	14.7	-22.2	4	4	1¼″	1¼″
150′	20′	52.5	68.5	-32.7	-27.1	27.3	-19.8	65.6	84.8	-40.5	-33.9	33.8	-24.7	6	6	1¼″	1½″
	24′	52.5	57.0	-28.2	-27.3	21.2	-19.6	65.6	70.9	-35.1	-34.2	26.4	-24.4	6	6	1¼″	1¼″
	30′	52.5	45.3	-23.9	-27.7	14.6	-19.2	65.6	56.2	-29.8	-34.7	18.1	-23.9	4	6	1¼″	1¼″
160′	20′	56.0	78.2	-36.9	-28.9	31.7	-21.1	70.0	97.5	-46.1	-36.1	39.5	-26.4	6	6	1½″	1½″
	24′	56.0	65.4	-31.9	-29.0	24.9	-20.9	70.0	81.8	-39.9	-36.3	31.3	-26.2	6	6	1¼″	1½″
	30′	56.0	53.3	-27.5	-29.4	18.2	-20.6	70.0	66.4	-34.3	-36.8	22.6	-25.7	6	6	1¼″	1¼″

NOTES: 1. ALL REACTIONS SHOWN GIVEN IN KIPS (1,000 LBS.).
2. ANY REACTION SHOWN AS NEGATIVE QUANTITY ACTS IN OPPOSITE DIRECTION FROM THAT SHOWN IN DIAGRAM.

HYYTINEN ENGINEERING
5458 Longley Lane, Suite B
RENO, NEVADA 89511
775-826-3019, Fax 775-826-3076
www.hyytinenengineering.com

JOB 3-11
SHEET NO. (10) OF
CALCULATED BY CWR DATE 1/20/11
CHECKED BY DATE
SCALE

PRELIM FRAME MODEL LOADS

		@ 25' o.c.
ROOF D = 10psf (ASSUMED)		250plf
SOLAR L = 5psf (ON S. HALF)		125plf
ROOF S = 23psf		575plf

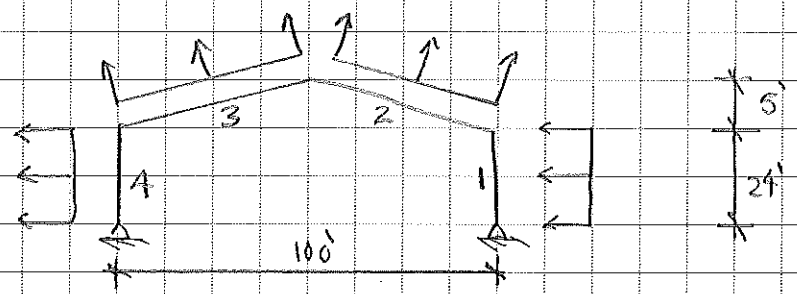

WIND: $P = q_h [(GC_{pf}) - (GC_{pi})] = 20.5 [GC_{pf} \pm 0.18]$

AREA	GC_{pf}	P	@ 25' o.c.
1	0.4	12	300plf
2	-0.69	18	450plf
3	-0.37	12	300plf
4	-0.29	10	250plf

	D	L	S	W
MAX ↓	12.6k	4.7k	28.8k	
MAX ↑				-15.6 MIN. -21.9 MAX.
MAX ←	7.2k	1.8k	16.8k	17k

∴ 0.6D+W -14.3k ↑ & 21.8k ←

D+L+S 46.1k ↓ & 75.8k ←

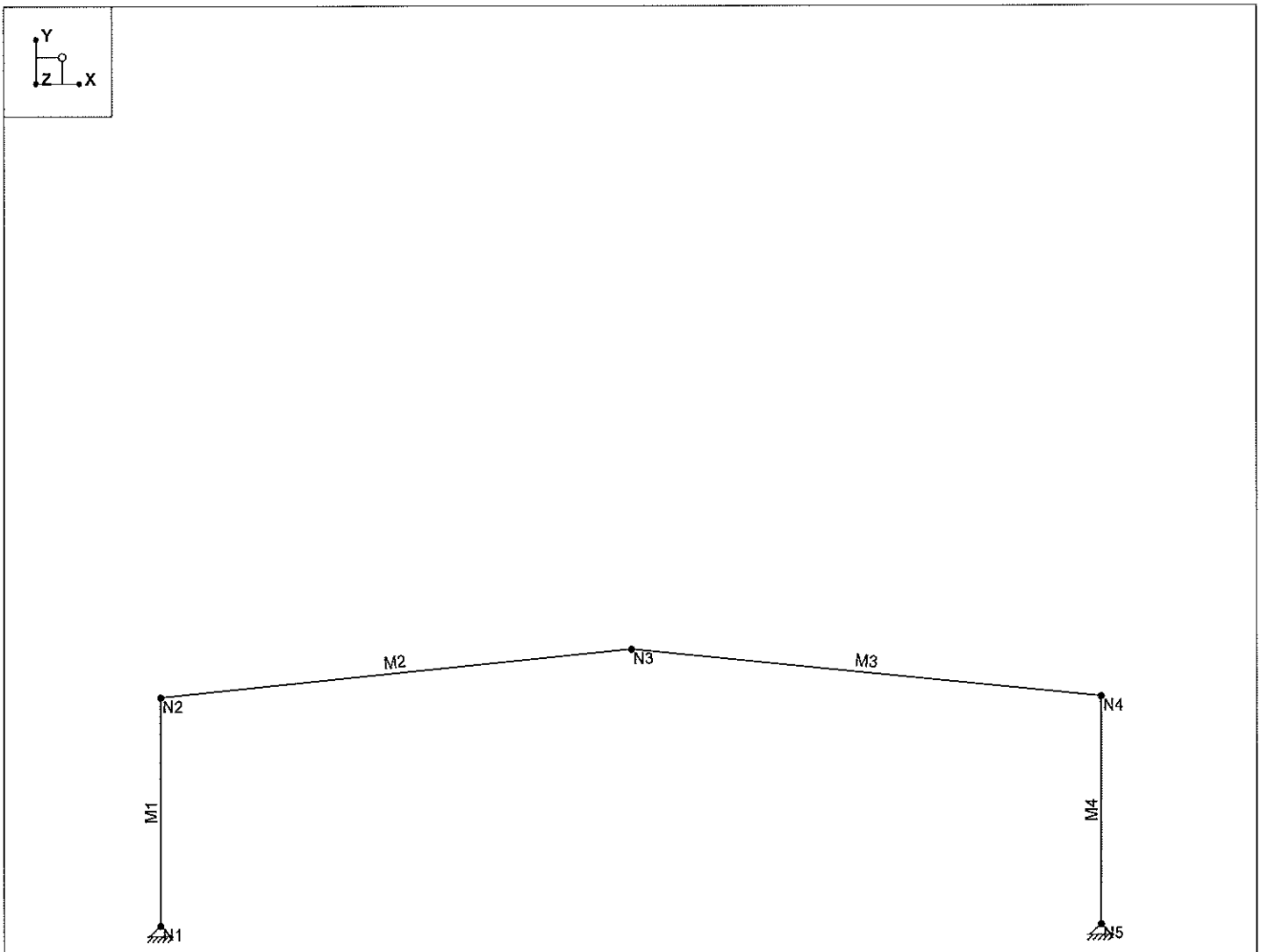

Results for LC 1, D

Hyytinen Engineering	Prelim Frame Model Loads	SK - 1
CMR		Mar 1, 2011 at 7:48 AM
3-11		Prelim Frame Loads.r2d

Global

Display Sections for Member Calcs	5
Max Internal Sections for Member Calcs	97
Include Shear Deformation	Yes
Merge Tolerance (in)	.12
P-Delta Analysis Tolerance	0.50%

Hot Rolled Steel Code	AISC 360-05: ASD (Direct Analysis Method)
Cold Formed Steel Code	AISI NAS-01: ASD
Wood Code	AF&PA NDS-05: ASD
Wood Temperature	< 100F
Concrete Code	ACI 318-05
Masonry Code	ACI 530-05: ASD
Aluminum Code	AA ADM1-05: ASD

Number of Shear Regions	4
Region Spacing Increment (in)	4
Concrete Stress Block	Rectangular
Use Cracked Sections	Yes
Bad Framing Warnings	No
Unused Force Warnings	Yes

Member Primary Data

	Label	I Joint	J Joint	Rotate(deg)	Section/Shape	Type	Design List	Material	Design Rules
1	M1	N1	N2		RIGID BEAM	None	None	RIGID	Typical
2	M2	N2	N3		RIGID BEAM	None	None	RIGID	Typical
3	M3	N3	N4		RIGID BEAM	None	None	RIGID	Typical
4	M4	N4	N5		RIGID BEAM	None	None	RIGID	Typical

Joint Coordinates and Temperatures

	Label	X [ft]	Y [ft]	Temp [F]
1	N1	0	0	0
2	N2	0	24	0
3	N3	50	29	0
4	N4	100	24	0
5	N5	100	0	0

Joint Boundary Conditions

	Joint Label	X [k/in]	Y [k/in]	Rotation[k-ft/rad]	Footing
1	N1	Reaction	Reaction		
2	N5	Reaction	Reaction		

Member Distributed Loads (BLC 1 : Dead)

	Member Label	Direction	Start Magnitude[k/ft,d...	End Magnitude[k/ft,d...	Start Location[ft,%]	End Location[ft,%]
1	M3	Y	-.25	-.25	0	0
2	M2	Y	-.25	-.25	0	0

Member Distributed Loads (BLC 2 : Live)

	Member Label	Direction	Start Magnitude[k/ft,d...	End Magnitude[k/ft,d...	Start Location[ft,%]	End Location[ft,%]
1	M3	Y	-.125	-.125	0	0

Member Distributed Loads (BLC 3 : Snow)

	Member Label	Direction	Start Magnitude[k/ft,d...	End Magnitude[k/ft,d...	Start Location[ft,%]	End Location[ft,%]

Member Distributed Loads (BLC 3 : Snow) (Continued)

	Member Label	Direction	Start Magnitude[k/ft,d...	End Magnitude[k/ft,d...	Start Location[ft,%]	End Location[ft,%]
1	M3	V	-.575	-.575	0	0
2	M2	V	-.575	-.575	0	0

Member Distributed Loads (BLC 4 : Wind)

	Member Label	Direction	Start Magnitude[k/ft,d...	End Magnitude[k/ft,d...	Start Location[ft,%]	End Location[ft,%]
1	M4	X	-.3	-.3	0	0
2	M1	X	-.25	-.25	0	0
3	M3	y	.45	.45	0	0
4	M2	y	.3	.3	0	0

Basic Load Cases

	BLC Description	Category	X Gravity	Y Gravity	Joint	Point	Distributed
1	Dead	DL					2
2	Live	LL					1
3	Snow	SL					2
4	Wind	WL					4

Load Combinations

	Description	Solve	PD...	SR...	BLC	Factor	BLC	Factor	BLC	Factor	BLC	Factor	BLC	Factor	BLC	Factor	BLC	Factor	BLC	Factor
1	D	Yes	Y		DL	1														
2	L	Yes	Y		LL	1														
3	S	Yes	Y		SL	1														
4	W	Yes	Y		WL	1														

Joint Reactions (By Combination)

	LC	Joint Label	X [k]	Y [k]	MZ [k-ft]
1	1	N1	7.214	12.562	0
2	1	N5	-7.214	12.562	0
3	1	Totals:	0	25.125	
4	1	COG (ft):	X: 50	Y: 26.5	
5	2	N1	1.794	1.575	0
6	2	N5	-1.794	4.706	0
7	2	Totals:	0	6.281	
8	2	COG (ft):	X: 75	Y: 26.5	
9	3	N1	16.767	28.75	0
10	3	N5	-16.767	28.75	0
11	3	Totals:	0	57.5	
12	3	COG (ft):	X: 50	Y: 26.5	
13	4	N1	-4.55	-15.629	0
14	4	N5	17	-21.871	0
15	4	Totals:	12.45	-37.5	
16	4	COG (ft):	X: 55	Y: 26.5	

HYYTINEN ENGINEERING
5458 Longley Lane, Suite B
RENO, NEVADA 89511
775-826-3019, Fax 775-826-3076
www.hyytinenengineering.com

JOB 3-11
SHEET NO. 14 OF
CALCULATED BY CWR DATE 1/20/11
CHECKED BY DATE
SCALE

PRELIM. FOUNDATION DESIGN

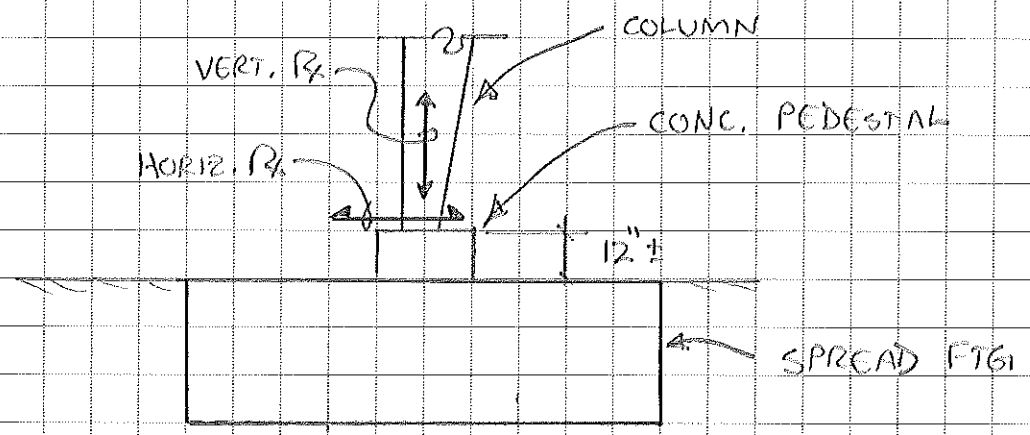

LOAD CASE	VERT. Rx MAX.	HORIZ. Rx MAX.	
D+L	43.1K ↓	30.2K	PER ABC CHARTS
D+W	21.1K ↑	18.1K	

COMPARING FRAME MODEL TO ABC CHARTS

USE 13K D ↓ + 5K D ↓ (SOLAR) + 30K S ↓ = 48K ↓ @ D+S
8K D ← + 2K D ← (SOLAR) + 20K S ← = 30K ← @ D+S
+ 17K W ← = 38K ← @ D+.75(S+W)
} MAX ↓ CASE

USE 25K W ↑ = 25K ↑
8K D ← + 17K W ← = 21.8K ←
} MAX. ↑ CASE @ 0.6D+W

HYYTINEN ENGINEERING
5458 Longley Lane, Suite B
RENO, NEVADA 89511
775-826-3019, Fax 775-826-3076
www.hyytinenengineering.com

JOB 3-11
SHEET NO. 15 OF
CALCULATED BY CWR DATE 1/20/11
CHECKED BY DATE
SCALE

SEISMIC COMPARISON TO WIND

$V = C_s W$

$= \frac{S_{DS} I W}{R}$

$= \frac{1.07(1.0) W}{3.5}$ → OMRF WORST CASE

$= 0.31 W$

SAY $\rho = 1.3$

$\therefore E = \rho Q_E = 1.3(.31W) = 0.40W$ LRFD

$\therefore 0.7E = 0.7(0.40W) = 0.28W$ ASD

RIGID FRAME LINE : W = 10psf x 25' x 24' = 6K WALL
: 10psf x 25' 100'/2' = 12.5K ROOF
: 5psf x 25' x 50' = 6.3K SOLAR
Σ = 24.8K PER COL. TOTAL

$\therefore 0.7E = 0.28(24.8) = 6.9K$ PER COL.

NOTE WIND = 17K ? PER COL. i.e. 2.5 x SEISMIC
∴ WIND CONTROLS DESIGN

HYYTINEN ENGINEERING
5458 Longley Lane, Suite B
RENO, NEVADA 89511
775-826-3019, Fax 775-826-3076
www.hyytinenengineering.com

JOB 3-11
SHEET NO. 16 OF
CALCULATED BY CWR DATE 1/20/11
CHECKED BY DATE
SCALE

SPREAD FOOTINGS (RIGID FRAME)

UPLIFT = 25K NET MAX,

WT REQ'D = 25K / 0.6 = 42K

42K = 0.15 kcf × 4' × D² ∴ D = 8.4 ⇒ USE 9' SQ.

∴ RESISTANCE = 0.15 × 4 × 9² × 0.6 = 29.2K OK

PASSIVE = 150 pcf × 4²/2 × 9' = 10.8K ⇒ 14.4K @ 1/3 INC.

NET THRUST = 38K − 14.4K = 23.6K D+S+W CASE (1/3 INC.)

= 30K − 10.8K = 19.2K D+S CASE

USE GRADEBEAM TO RESIST NET THRUST (ASSUME 16" SQ).

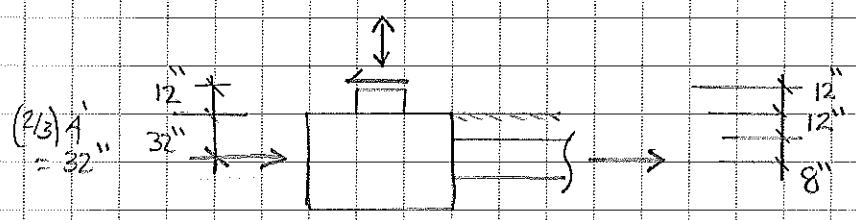

$$\frac{23.6 \times 32'' + 14.4 \times 44''}{38} = 36'' \text{ EFFECTIVE}$$

@ 38K AXIAL MAX. A_s REQ'D = $\frac{38}{24\ ksi}$ = 1.58 in² (NEGLECTING PASSIVE)

USE (4) #6 MIN, A_s = 4 × .44 = 1.76 in² OK

CHECK FOOTING W/ THRUST MOMENTS

38K @ 3' = 114 ft.K @ D+S+W CASE

$$\frac{P}{A} + \frac{M}{S} = \frac{38}{9^2} + \frac{114}{9^3/6} = 1.41\ ksf < 2\ ksf \quad OK$$

30K @ 3' = 90 ft.K @ D+S CASE

$$\frac{P}{A} + \frac{M}{S} = \frac{48}{9^2} + \frac{90}{9^3/6} = 1.33\ ksf < 1.5\ ksf \quad OK$$

HYYTINEN ENGINEERING
5458 Longley Lane, Suite B
RENO, NEVADA 89511
775-826-3019, Fax 775-826-3076
www.hyytinenengineering.com

JOB 3-11
SHEET NO. 17 OF
CALCULATED BY CWR DATE 2/8/11
CHECKED BY DATE
SCALE

ENDWALL FOOTINGS

WORST-CASE @ X-BRACE

LINE TRIB = 25/2 = 12.5'

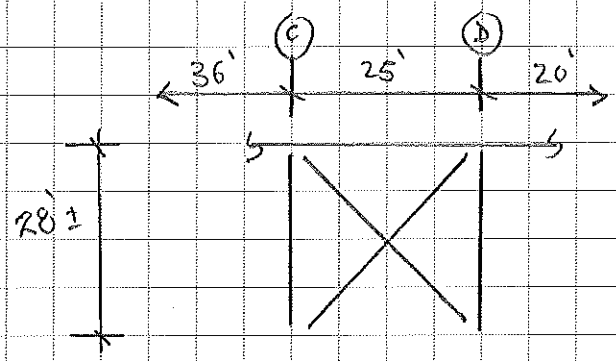

NET UPLIFT = 20psf − .6(10) = 14psf

C TRIB = 12.5'(36+25)/2 = 381sf ∴ WIND UPLIFT = 381 × 14 = 5.3k

D TRIB = 12.5'(25+20)/2 = 281sf = 281 × 14 = 3.9k

BRACE LATERAL = (10psf + 12psf) × 12.5' × 28/2 = 3.9k @ 28'

∴ UPLIFT RX = 3.9k × 28'/25' = 4.4k

∴ MAX UPLIFT RX = 5.3k + 4.4k = 9.7k

$W_{REQ'D}$ = 9.7k/0.6 = 16.2k

16.2k = 0.15kcf × 4' × D^2 ∴ D = 5.2 → USE 6' SQ. × 4' DP.

MAX. BRG = (10+7+25) × 381sf / 6^2 = 444psf << 1500 ok

PASSIVE = 150pcf × 4^2/2 × 6' = 7.2k > 3.9k LATERAL ok

CORNER COLUMNS:

TRIB = 25/2 × 25/2 = 156sf

WIND UPLIFT = 20psf × 156 = 3.1k

$W_{REQ'D}$ = 3.1/0.6 = 5.2k

5.2k = 0.15kcf × 3' × D^2 ∴ D = 3.4' → USE 5' SQ. × 3' DP. MIN.

MAX. BRG. = (10+7+25) × 156sf / 5^2 = 262psf << 1500 ok

HYYTINEN ENGINEERING
5458 Longley Lane, Suite B
RENO, NEVADA 89511
775-826-3019, Fax 775-826-3076
www.hyytinenengineering.com

JOB 3-11
SHEET NO. 18 OF
CALCULATED BY CWR DATE 2/8/11
CHECKED BY DATE
SCALE

FOOTING REINF.

AS MIN. = 0.0018 x 24" x 12" = 0.52 in²/FT → USE #7 @ 12" O.C. MAX. ALL FOOTINGS @ T & B

PEDESTALS & ANCHORS

USE 2'-8" SQ. MIN

MAX. THRUST = 38K → LOAD TRANSFER @ EMBED PL.

MAX. UPLIFT = 25K → ANCHORS EMBED INTO BASE FOOTING

@ 38K THRUST ASSUME (4) 1¼" Ø A307 ALLOW. = 4(14.7) = 58.8K OK

@ 25K UPLIFT ALLOW. = 4(27.6) = 110.4K OK

CHECK GROUP @ 4" x 4" FOR UPLIFT EMBED → USE 30" EMBED

Tu = 25 x 1.6 = 40K

ØN = 64K ∴ OK

CHECK C12x30x1'-0" FOR THRUST

fbr = 38K / 2 FLANGES / 3" / 12" = 528 psi = 0.13 f'c OK

CHECK VERT. REINF. FOR THRUST - SHEAR FRICTION & TENSION

Vu = 38 x 1.6 = 60.8K

ØVn = 60.8 = Av x 60ksi x 1.0(1.0) ∴ Av = 1.01 in²

Tu = 60.8K @ 24" MAX / 24" = 60.8K

A REQ'D = 60.8K / (0.9 x 60ksi) = 1.13 in²

USE (3) #7 VERTS EA. SIDE MIN. As = 3 x 0.6 = 1.8 in² / SIDE OK BY INSP.

1. STEEL STRENGTH OF ANCHOR IN TENSION, ϕN_{sa}:

ϕN_{sa} = 32.70 Kips

Because load eccentricities are zero, total strength of the group = $n\phi N_{sa}$ = 130.82 Kips

2. CONCRETE BREAKOUT STRENGTH IN TENSION, ϕN_{cbg}:

ϕN_{cbg} = 63.93 Kips

Note: This strength relates to the whole anchor group and needs to be checked against the total tension demand on the whole group

3. PULLOUT STRENGTH OF ANCHOR IN TENSION, ϕN_{pn}:

ϕN_{pn} = 37.58 Kips

Because load eccentricities are zero, total strength of the group = $n\phi N_{sa}$ = 150.33 Kips

4. STRENGTH IN CONCRETE SIDE FACE BLOWOUT FOR HEADED ANCHOR IN TENSION, ϕN_{sbg}:

Concrete side-face blowout does not apply for C_{a1} >= $0.4h_{ef}$

5. STEEL STRENGTH OF ANCHOR IN SHEAR, ϕV_{sa}:

ϕV_{sa} = 17.01 Kips (in X- as well as in Y-direction)

Because eccentricity of shear in X-direction is zero, total strength of the group in X-direction = $n\phi V_{sa}$ = 68.02 Kips

Because eccentricity of shear in Y-direction is zero, total strength of the group in Y-direction = $n\phi V_{sa}$ = 68.02 Kips

6. CONCRETE BREAKOUT STRENGTH IN SHEAR, ϕV_{cbg}:

Shear in X-Direction

Mode 1: Concrete failure starts at the bolt column#1 from the governing edge

Design strength in X-direction in Mode 1 = 77.40 Kips

Mode 2: Concrete failure starts at the bolt column#2 from the governing edge

Design strength in X-direction in Mode 2 = 38.70 Kips

Design strength of the present bolt formation in X-direction is the minimum of the shear strengths calculated from all modes = 38.70 Kips

Shear in Y-Direction

Mode 1: Concrete failure starts at anchor row#1 from the governing edge

Design strength in Y-direction in Mode 1 = 77.40 Kips

Mode 2: Concrete failure starts at anchor row#2 from the governing edge

Design strength in Y-direction in Mode 2 = 38.70 Kips

Design strength of the present bolt formation in Y-direction is the minimum of the shear strengths calculated from all modes = 38.70 Kips

7. CONCRETE PRYOUT STRENGTH OF ANCHOR IN SHEAR, ϕV_{cpg}:

ϕV_{cpg} = 127.86 Kips (in X- as well as in Y-direction)

Note: This strength relates to the whole anchor group and needs to be checked against the total shear demand on the whole group

SUMMARY OF STRENGTH CALCULATIONS OF THE GROUP:

Tension: 63.93 kips..... Brittle failure - see note below.

Shear in X-direction: 38.70 kips..... Brittle failure - see note below.

Shear in Y-direction: 38.70 kips..... Brittle failure - see note below.

Note:
Strength governed by brittle failure is not permitted in structures in SDC C or higher unless any of the following is satisfied:

1. ACI 318-05 Section D.3.3.5
2. 2006 IBC (incl. 2007 Supplement) Section 1908.1.16 modification to ACI 318-05 Section D.3.3.4
3. 2006 IBC (incl. 2007 Supplement) Section 1908.1.16 modification to ACI 318-05 Section D.3.3.5
4. ACI 318-08 Section D.3.3.5 or D.3.3.6

STRUCTURAL CALCULATIONS

FOR

Support of Rooftop Solar Panels at Carson City Public Works Dept. Salt and Cinder Storage Building

3505 Butti Way
Carson City, Nevada 89701

REGISTERED PROFESSIONAL ENGINEER - STATE OF NEVADA
CHRISTOPHER M. ROPER
EXP. 12-31-11
CIVIL & STRUCTURAL
No. 15032
6/10/11

HYYTINEN ENGINEERING
5458 Longley Lane, Suite B
Reno, NV 89511
775/826-3019 775/826-3076 FAX
www.hyytinenengineering.com

HE#3-11

HYYTINEN ENGINEERING
5458 Longley Lane, Suite B
RENO, NEVADA 89511
775-826-3019, Fax 775-826-3076
www.hyytinenengineering.com

JOB 3-11
SHEET NO. 1 OF
CALCULATED BY CWR DATE 2/4/11
CHECKED BY DATE
SCALE

WIND: SOLAR RACKING

EDGE ZONES: $a = 10\%(100') = 10'$
$= 0.4(25') = 10'$

CONNECTOR / RACKING TRIB. = 5' MAX. x 3' = 15 sf TYP.

CALC WIND LOADS: $P = qh[(GC_p) - (GC_{pi})]$

$qh = 20.5$ psf

0 INTERNAL PRESSURE IS N/A FOR EXTERIOR MOUNTED SOLAR PANELS

ROOF SLOPE = 1:12 < 5°, 15sf TRIB

ZONE 1	$GC_p = 1.0$	∴ P =	21 psf
2	= 1.7	=	35 psf
3	= 2.5	=	51 psf

SOLAR DEAD LOADS

PANELS	41 lb / 5.42' / 3.13'	= 2.4 psf
B12	2.5 plf / 5'	= 0.5 psf
B22	2 x 1.9 plf / 5.42'	= 0.7 psf
MSC.		0.4 psf
		4 psf

ES-A SERIES
photovoltaic panels

200, 205, 210 & 215 W

evergreensolar

CERTIFIED FOR COASTAL INSTALLATIONS

Made in the USA ARRA Compliant

MORE electricity

Our ES-A series panels have the best power tolerance in the industry (-0/+5 W) and consistently deliver more electricity than competitors in field tests.

LESS impact

String Ribbon® panels have the smallest carbon footprint and fastest energy payback of any silicon-based solar panel ever made.

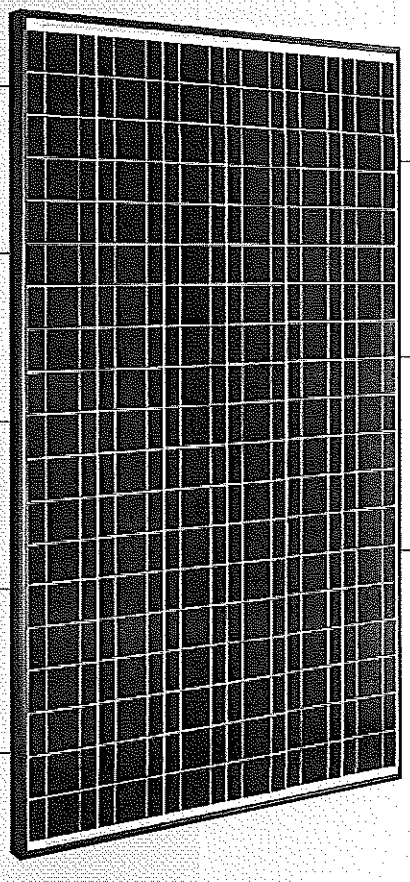

GUARANTEED POWER[1]
The minimum guaranteed power is the nameplate so you never get less power than you paid for.

INDEPENDENTLY VERIFIED POWER[2]
Four independent test labs regularly check panel power so you get the power we promise.

ANTI-REFLECTIVE GLASS
Delivering 2–3% more electricity compared to panels with standard glass.

TEMPERATURE RATINGS OVER 90%[3]
Maintaining up to 4% higher output than most other crystalline silicon panels under hot conditions.

HIGH RANKINGS IN FIELD TESTS[4]
Long-term Photon and TÜV field tests prove Evergreen panels produce more electricity (kWh/kW).

SMALLEST CARBON FOOTPRINT[5]
Our String Ribbon® wafers are made with a fraction of the emissions that result from making conventional silicon panels.

12-MONTH ENERGY PAYBACK[5]
Our panels begin generating truly clean electricity faster than any other silicon-based panel on the market.

100% CARDBOARD-FREE REUSABLE PACKAGING
Reduces disposal costs and on-site manpower while eliminating tons of landfill.

PV CYCLE

1 Guaranteed upon initial delivery of the panel to the customer, maximum power up to 4.99 W above nameplate rating; 2 Evergreen power testers calibrated by taking the straight average of test data from NREL, TÜV Rheinland PTL, TÜV Rheinland Cologne and Fraunhofer ISE; 3 Based on comparing PTC/STC ratings of major competing multi-crystalline silicon panel brands published by the California Energy Commission in May 2009; 4 2008 Module Tests conducted by Photon and published in Photon International February 2009, TÜV Rheinland tests run from April to September 2008

5 Evaluation completed by the Energy Research Foundation of the Netherlands (ECN), May 2009

STRING RIBBON® SOLAR PANELS OFFERING EXCEPTIONAL PERFORMANCE AND INDUSTRY LEADING ENVIRONMENTAL CREDENTIALS. IN SHORT, MORE ELECTRICITY AND LESS IMPACT.

*All Evergreen panels come with a 10 year workmanship and 25 year limited power warranty. For full details see the **Evergreen Solar Limited Warranty** available upon request or online. This product is certified to cUL 1703, UL 4703, UL Fire Safety Class C, IEC 61215 Ed.2, IEC 61730 Class A, IEC 61701 (salt mist corrosion) and FSEC standards. **String Ribbon** is a registered trademark of Evergreen Solar, Inc. Evergreen Solar's wafer manufacturing technology is patented in the United States and other countries.* *Copyright © Evergreen Solar, Inc 2011.*

www.tuv.com TÜVRheinland ID: 0000023716 CE IEC INTERTEK ETL LISTED c US

ELECTRICAL characteristics

Standard Test Conditions (STC)[1]

	ES-A-200 -fa3*	ES-A-205 -fa3*	ES-A-210 -fa3*	ES-A-215 -fa3*	
P_{mp}[2]	200	205	210	215	W
$P_{tolerance}$	-0/+4.99 (-0/+2.5)	-0/+4.99 (-0/+2.5)	-0/+4.99 (-0/+2.5)	-0/+4.99 (-0/+2.5)	W (%)
$P_{mp, max}$	204.99	209.99	214.99	219.99	W
$P_{mp, min}$	200.00	205.00	210.00	215.00	W
P_{ptc}[3]	180.7	185.4	190.0	194.6	W
η_{min}	12.7	13.1	13.4	13.7	%
V_{mp}	18.1	18.2	18.3	18.4	V
I_{mp}	11.05	11.27	11.48	11.69	A
V_{oc}	22.6	22.7	22.8	22.9	V
I_{sc}	11.80	11.93	12.11	12.30	A

Nominal Operating Cell Temperature Conditions (NOCT)[4]

T_{NOCT}	45.4	45.4	45.4	45.4	°C
P_{max}	146.4	150.1	153.8	157.4	W
V_{mp}	16.5	16.6	16.7	16.8	V
I_{mp}	8.87	9.04	9.21	9.37	A
V_{oc}	20.8	21.0	21.1	21.2	V
I_{sc}	9.44	9.57	9.76	9.95	A

Low Irradiance

The typical relative reduction of panel efficiency at an irradiance of 200 W/m² both at 25°C cell temperature and spectrum AM 1.5 is 0%.

Temperature Coefficients

γP_{mp}	-0.43	%/°C
βV_{mp}	-0.40	%/°C
αI_{mp}	-0.03	%/°C
βV_{oc}	-0.31	%/°C
αI_{sc}	+0.05	%/°C

System Design

Series Fuse Rating	20 A
Maximum DC System Voltage (UL)	600 V

*1 1000 W/m², 25°C cell temperature, AM 1.5 spectrum; 2 Maximum power point or rated power; 3 At PV-USA Test Conditions: 1000 W/m², 20°C ambient temperature, 1 m/s wind speed; 4 800 W/m², 20°C ambient temperature, 1 m/s wind speed, AM 1.5 spectrum; 5 Cell color may vary due to our unique manufacturing process but does not affect the performance of the panel; 6 Per UL 1703. When using Mounting Methods A3 (long side end mounting) or B (three rails) as described in the Mounting Guide for this product; 7 Per IEC 61215; * I-framed, a-low voltage, 3-matt blue (textured) cells and black anodized frame*

⚠ ELECTRICAL EQUIPMENT
CHECK WITH YOUR INSTALLER

MECHANICAL specifications

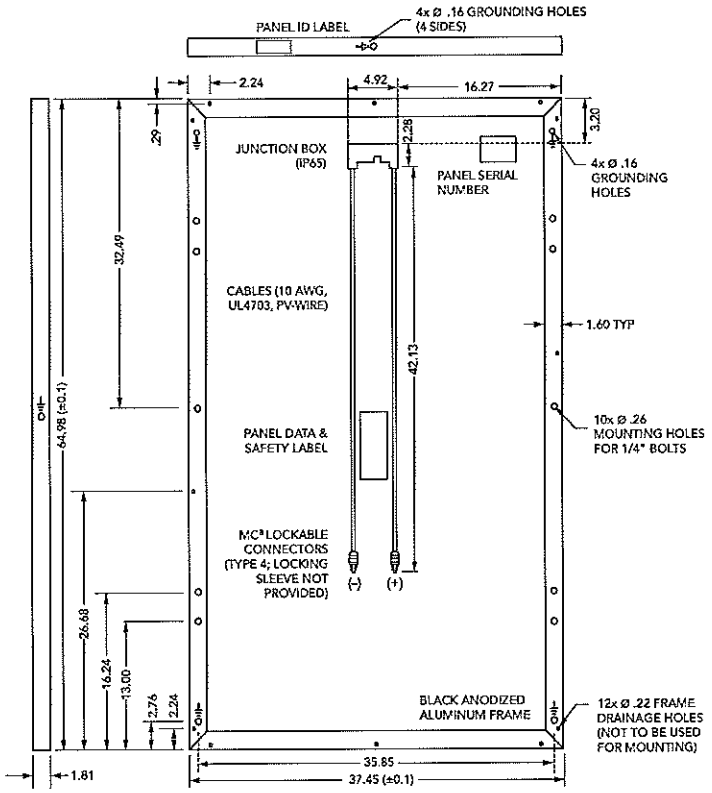

External Dimensions	65.0" x 37.5" x 1.8" / 1650.5 x 951.3 x 46 mm
Weight	41 lbs
Solar Cells[5]	114 Multi-Crystalline Silicon String Ribbon® Cells
Frame	Black Anodized Aluminum—Doubled Walled
Front Cover	Anti-Reflective Tempered Solar Glass 1/8" Thickness
Encapsulant / Back Cover	EVA / TPE
Maximum Certified Wind & Snow Load[6]	80 lbs/ft²
Hailstone Impact Test[7]	ø 1" ice ball at 23 m/s (52 miles/h)

Product packaged 28 per pallet and tested to International Safe Transit Association (ISTA) Standard 2B. All specifications in this product information sheet conform to EN 50380. See the Evergreen Solar Safety, Installation and Operation Manual, Mounting Guide and Inverter Selection Guide for further information on approved installation and use of this product.

Due to continuous innovation, research and product improvement, the specifications in this product information sheet are subject to change without notice. No rights can be derived from this product information sheet and Evergreen Solar assumes no liability whatsoever connected to or resulting from the use of any information contained herein. MC® is a registered trademark of Multi-Contact AG.

PARTNER

ES-A_200_205_210_215_fa3_US; effective January 1st 2011 SM-0089 RevC

Evergreen Solar Inc.
www.evergreensolar.com

WORLDWIDE HEADQUARTERS
Evergreen Solar Inc.
138 Bartlett Street, Marlboro, MA 01752, USA
T +1.508.357.2221 F +1.508.229.0747
info@evergreensolar.com

CUSTOMER SERVICE Americas and Asia
Evergreen Solar Inc.
138 Bartlett Street, Marlboro, MA 01752, USA
T +1.508.357.2221 F +1.508.229.0747
sales@evergreensolar.com

HYYTINEN ENGINEERING
5458 Longley Lane, Suite B
RENO, NEVADA 89511
Phone (775) 826-3019
FAX (775) 826-3076
www.hyytinenengineering.com

JOB 3-11
SHEET NO. 4 OF
CALCULATED BY CWR DATE 2/4/11
CHECKED BY DATE
SCALE

UPLIFT CONNECTIONS

CONN. TRIB. AREA = (6.5/2) x 3.3' = 10.7 sf

UPLIFT = 35 psf x 10.7 = 375 #

1/4" CONN. ALLOW. = 450 # ALL GAGES
5/16" CONN. = 750 # " "
3/8" CONN. = 1000 # " "
1/2" CONN. = 1500 # 12 GA MIN.

PURLIN CONN'S & DOWNSLOPE STRUT

14 GA PURLINS MIN.
USE (2) 1/4-14 x 1 1/2" TEKS
TALLOW. = 2 x 1145 / 3 = 763 #

TRIB. ALLOW. = 763 # / 35 psf = 22 sf TYP. ⇒ 22 / 4' PURLINS = 5.5' o.c. OK

= 763 # / 51 psf = 15 sf TYP. ⇒ 15 / 4' PURLINS = 3.8' o.c. SAY OK @ 4' o.c.

USE B12 STRUT MIN. SPANNING DOWNSLOPE OVER 4' o.c. PURLINS
@ 48" o.c. SPANS WALLOW. = 1636 # @ Δ = 0.153" = L/314
PALLOW. = 1636 x 0.5 = 818 # @ Δ = 0.153 x 0.8 = 0.122" = L/392
818 # = 35 psf x 4' x S ∴ S = 5.8' TYP. CASE
= 51 psf x 4' x S ∴ S = 4.0' MAX. CASE

∴ USE B12 @ 5' o.c. TYP.
@ 2.5' o.c. AT CORNER ZONES

5

PULL-OUT STRENGTH

•With Safety Factor of 3
•Maximum pullout strength for B11 & B12 channels is limited to 1500 lbs. (6670 N).

Thread Size	Nut Part Numbers	Pull-Out Strength 12 ga. Channel Lbs.	N	14 ga. Channel Lbs.	N	16 ga. Channel Lbs.	N
#8-32	N221, N221WO,N521, N721, TN221	200	890	200	890	200	890
#10-24	N222, N222WO, N522, N722, TN222	250	1110	250	1110	250	1110
#10-32	N227, N227WO, N527, N727, TN227	250	1110	250	1110	250	1110
1/4"-20	NW524*, N224,N224WO, N524, N724, TN224, STN224, SN224WO, SN224, SN524, SN724	450	2000	450	2000	450	2000
5/16"-18	N223, N223WO, N523, N723, TN223	750	3330	750	3330	750	3330
3/8"-16	NW528*, N228, N228WO, N528, N728 TN228, STN228, SN228WO, SN228, SN528, SN728	1100	4890	1000	4450	1000	4450
7/16"-14	N226, N226WO, N526, N726, TN226	1500	6670	1200	5340	1000	4450
1/2"-13	N225, N225WO, N725, TN225, STN225, SN225WO, SN225, SN725	2000	8900	1400	6230	1000	4450
	NW525*, N525, N525WO, TN525, STN525, SN525WO, SN525	1500	6670	1400	6230	1000	4450
5/8"-11	N255, N255WO, N755, TN255	2000	8900	1400	6230	1000	4450
	N555, N555WO	1500	6670	1400	6230	1000	4450
3/4"-10	N275, N275WO, N775	2000	8900	1400	6230	1000	4450
	N575, N575WO	1500	6670	1400	6230	1000	4450
7/8"-9	N278, N278WO, N778	1500	6670	1400	6230	1000	4450
M6 x 1	BMS-6, BMS-6L, BMS-6M, BMS-6S, BMT-6	450	2000	450	2000	450	2000
M8 x 1.25	BMS-8, BMS-8L, BMS-8M, BMS-8S, BMT-8	750	3330	750	3330	750	3330
M10 x 1.50	BMS-10, BMS-10L, BMS-10M, BMS-10S, BMT-20	1100	4890	1000	4450	1000	4450
M12 x 1.75	BMS-D-12, BMS-D-12L, BMS-D-12M, BMT-D-12	2000	8900	1400	6230	1000	4450
	BMS-12, BMS-12M, BMS-12S, BMT-12	1500	6670	1400	6230	1000	4450

Metric Threads

*** Combo Nut Washer (see page 49)**

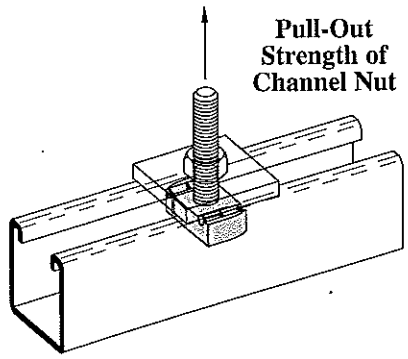

Note: For mini channel nut information see page 191.

Reference page 44 for general fitting and standard finish specifications.

* With serrations under head

Performance Data

PULLOUT VALUES (average lbs. ultimate)										
Fastener		Steel Gauge								
Dia.	Pt.	26	24	22	20	18	16	14	12	3/16
12	2	156	243	283	375	605	848	1181	1856	3520
	3	142	211	289	341	551	757	1063	1631	2998
1/4	3	141	231	293	346	613	880	1145	1858	4550

PULLOVER VALUES (average lbs. ultimate)							
Fastener		Steel Gauge					
Dia.	Pt.	26	24	22	20	18	16
12	2	544	819	1107	1247	1830	2482
	3	550	928	1087	1452	1830	2452
1/4	3	598	932	1276	1393	1950	2388

FASTENER VALUES			
Fastener (dia-tpi)	Tensile (lbs. min.)	Shear (avg. lbs. ult.)	Torque (min. in. lbs.)
12-14	2778	2000	92
1/4-14	4060	2600	150

SHEET STEEL GAUGES								
Gauge No.	12	14	16	18	20	22	24	26
Decimal Equivalent	.105"	.075"	.060"	.048"	.036"	.030"	.024"	.018"

SHEAR VALUES (average lbs. ultimate)	

BEAM LOADING

Beam Span In.	Beam Span mm	Channel Style	Uniform Load and Deflection Lbs.	N	In.	mm	Uniform Load @ Deflection = 1/240 Span Lbs.	N	1/360 Span Lbs.	N
12	(305)	B12	3880	(17259)	.009	(.23)	3880	(17259)	3880	(17259)
		B12A	3880*	(17259)	.001	(.02)	3880*	(17259)	3880*	(17259)
24	(609)	B12	3273	(14559)	.038	(.96)	3273	(14559)	3273	(14559)
		B12A	3880*	(17259)	.008	(.20)	3880*	(17259)	3880*	(17259)
36	(914)	B12	2182	(9706)	.086	(2.18)	2182	(9706)	2182	(9706)
		B12A	3880*	(17259)	.028	(.71)	3880*	(17259)	3880*	(17259)
48	(1219)	B12	1636	(7277)	.153	(3.88)	1636	(7277)	1421	(6321)
		B12A	3880*	(17259)	.067	(1.70)	3880*	(17259)	3880*	(17259)
60	(1524)	B12	1309	(5823)	.240	(6.09)	1309	(5823)	909	(4043)
		B12A	3847*	(17112)	.130	(3.30)	3847*	(17112)	3847*	(17112)
72	(1829)	B12	1091	(4853)	.345	(8.76)	947	(4212)	632	(2811)
		B12A	3206	(14261)	.188	(4.77)	3206	(14261)	3206	(14261)
84	(2133)	B12	935	(4159)	.470	(11.94)	696	(3096)	464	(2064)
		B12A	2748	(12224)	.255	(6.48)	2748	(12224)	2509	(11160)
96	(2438)	B12	818	(3638)	.614	(15.59)	533	(2371)	355	(1579)
		B12A	2404	(10693)	.334	(8.48)	2404	(10693)	1921	(8545)
108	(2743)	B12	727	(3234)	.777	(19.73)	421	(1873)	281	(1250)
		B12A	2137	(9506)	.422	(10.72)	2137	(9506)	1518	(6752)
120	(3048)	B12	655	(2913)	.959	(24.36)	341	(1517)	227	(1010)
		B12A	1924	(8558)	.521	(13.23)	1844	(8202)	1229	(5467)

Based on simple beam condition using an allowable design stress of 25,000 psi (172 MPa) in accordance with MFMA, with adequate lateral bracing (see page 11 for further explanation). Actual yield point of cold rolled steel is 42,000 psi. To determine concentrated load capacity at mid span, multiply uniform load by 0.5 and corresponding deflection by 0.8. *Failure determined by weld shear.

COLUMN LOADING

Unbraced Height In.	Unbraced Height mm	Channel Style	Max. Column Loading K = .80 Loaded@ C.G. Lbs.	N	Loaded@ Slot Face Lbs.	N	Max. Column Loading (Loaded @ C.G.) K = .65 Lbs.	N	K = 1.0 Lbs.	N	K = 1.2 Lbs.	N
12	(305)	B12	10140	(45105)	4752	(21138)	10247	(45581)	9965	(44326)	9756	(43397)
		B12A	20820	(92612)	8023	(35688)	20854	(92763)	20763	(92358)	20694	(92051)
24	(609)	B12	9244	(41119)	4514	(20079)	9639	(42876)	8629	(38384)	7933	(35288)
		B12A	20519	(91273)	7956	(35390)	20655	(91878)	20293	(90268)	20017	(89040)
36	(914)	B12	7933	(35288)	4137	(18402)	8711	(35748)	6786	(30185)	5572	(24785)
		B12A	20017	(89040)	7844	(34892)	20324	(90405)	19509	(86780)	18889	(84022)
48	(1219)	B12	6386	(28406)	3638	(16182)	7562	(33637)	4785	(21285)	3717	(16534)
		B12A	19315	(85917)	7688	(34198)	19861	(88346)	18412	(81900)	17309	(76994)
60	(1524)	B12	4785	(21285)	2963	(13180)	6285	(27957)	3523	(15671)	2806	(12482)
		B12A	18412	(81900)	6941	(30875)	19265	(85695)	17002	(75628)	15278	(67960)
72	(1829)	B12	3717	(16534)	2197	(9773)	4964	(22081)	2806	(12482)	2271	(10102)
		B12A	17309	(76994)	5334	(23727)	18536	(82452)	15278	(67960)	12795	(56915)
84	(2133)	B12	3052	(13576)	1717	(7637)	3994	(17766)	2345	(10431)	1913	(8509)
		B12A	16005	(71194)	4176	(18576)	17675	(78622)	13240	(58894)	9884	(43966)
96	(2438)	B12	2600	(11565)	1391	(6187)	3350	(14901)	2019	(8981)	1650	(7339)
		B12A	14500	(64499)	3328	(14803)	16682	(74205)	10889	(48436)	7567	(33659)
108	(2743)	B12	2271	(10102)	1155	(5137)	2893	(12869)	1773	(7886)	1446	(6432)
		B12A	12795	(56915)	2692	(11974)	15556	(69196)	8610	(38299)	5979	(26596)
120	(3048)	B12	2019	(8981)	977	(4346)	2553	(11356)	1577	(7015)	1279**	(5689)
		B12A	10889	(48436)	2202	(9795)	14298	(63600)	6974	(31022)	4843**	(21543)

**Where the slenderness ratio $\frac{KL}{r}$ exceeds 200, and K = end fixity factor, L = actual length and r = radius of gyration.

Reference page 14 for general fitting and standard finish specifications.

HYYTINEN ENGINEERING
5458 Longley Lane, Suite B
RENO, NEVADA 89511
Phone (775) 826-3019
FAX (775) 826-3076
www.hyytinenengineering.com

JOB 3-11
SHEET NO. (8) OF
CALCULATED BY CWR DATE 2/4/11
CHECKED BY DATE
SCALE

SOLAR SUPPORT STRUTS

MAX. SPAN = 5'

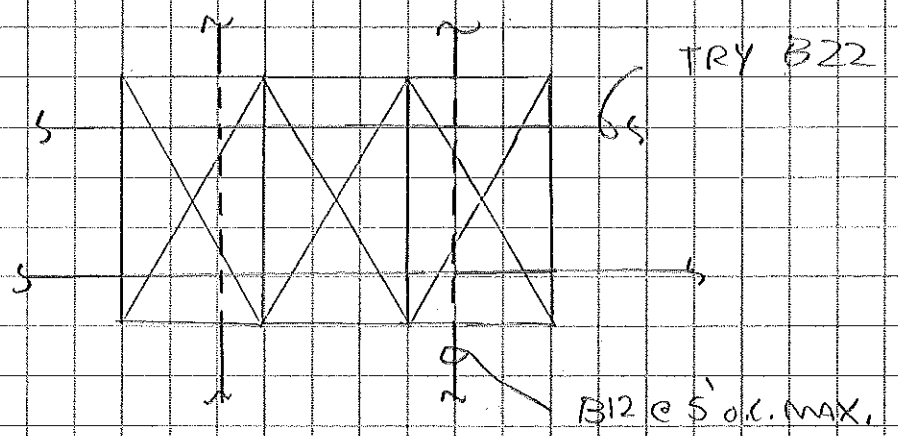

@ 60" o.c., SPANS $w_{ALLOW.} = 681\#$ @ $\Delta = 0.351" = L/171$

$P_{ALLOW.} = (681) \times 0.5 = 341\#$ @ $\Delta = 0.351 \times .8 = 0.281" = L/214$

$P_{TYP.} = 35psf \times 3.3' \times 6.5'/2 = 375\# \rightarrow$ SAY, OK @ CONT. STRUT

AT MAX CASE 51psf ; 30" o.c. SPANS.

$w_{ALLOW.} = 1361\#$ @ $\Delta = 0.087" = L/345$

$P_{ALLOW.} = 1361 \times 0.5 = 681\#$ @ $\Delta = 0.087 \times 0.8 = 0.70" = L/431$

$P_{MAX} = 51psf \times 3.3' \times 6.5'/2 = 547\# < 681\#$ OK

B22 Beam Loading Data

Beam Span In.	Beam Span mm	Channel Style	Uniform Load and Deflection Lbs.	N	In.	mm	Uniform Load @ Deflection = 1/240 Span Lbs.	N	1/360 Span Lbs.	N
12	(305)	B22	2610	(11610)	.014	(.35)	2610	(11610)	2610	(11610)
		B22A	2610*	(11610)	.002	(.05)	2610*	(11610)	2610*	(11610)
		B22X	5790*	(25755)	.001	(.02)	5790*	(25755)	5790*	(25755)
18	(457)	B22	2269	(10093)	.031	(.79)	2269	(10093)	2269	(10093)
		B22A	2610*	(11610)	.007	(.18)	2610*	(11610)	2610*	(11610)
		B22X	5790*	(25755)	.003	(.07)	5790*	(25755)	5790*	(25755)
24	(609)	B22	1702	(7571)	.056	(1.42)	1702	(7571)	1702	(7571)
		B22A	2610*	(11610)	.017	(.43)	2610*	(11610)	2610*	(11610)
		B22X	5790*	(25755)	.008	(.20)	5790*	(25755)	5790*	(25755)
30	(762)	B22	1361	(6054)	.087	(2.21)	1361	(6054)	1294	(5756)
		B22A	2610*	(11610)	.033	(.84)	2610*	(11610)	2610*	(11610)
		B22X	5790*	(25755)	.017	(.73)	5790*	(25755)	5790*	(25755)
36	(914)	B22	1135	(5049)	.126	(3.20)	1135	(5049)	899	(3999)
		B22A	2610*	(11610)	.057	(1.45)	2610*	(11610)	2610*	(11610)
		B22X	5790*	(25755)	.029	(.73)	5790*	(25755)	5790*	(25755)
42	(1067)	B22	972	(4323)	.172	(4.37)	972	(4323)	660	(2936)
		B22A	2610*	(11610)	.091	(2.31)	2610*	(11610)	2610*	(11610)
		B22X	5790*	(25755)	.046	(1.17)	5790*	(25755)	5790*	(25755)
48	(1219)	B22	851	(3785)	.224	(5.69)	758	(3372)	505	(2246)
		B22A	2405	(10698)	.125	(3.17)	2405	(10698)	2405	(10698)
		B22X	5790*	(25755)	.068	(1.73)	5790*	(25755)	5790*	(25755)
54	(1371)	B22	756	(3363)	.284	(7.21)	599	(2664)	399	(1775)
		B22A	2138	(9510)	.158	(4.01)	2138	(9510)	2024	(9003)
		B22X	5790*	(25755)	.097	(2.46)	5790*	(25755)	5790*	(25755)
60	(1524)	B22	681	(3029)	.351	(8.91)	485	(2157)	323	(1437)
		B22A	1924	(8558)	.195	(4.95)	1924	(8558)	1640	(7295)
		B22X	5645	(25110)	.130	(3.30)	5645	(25110)	5645	(25110)
66	(1676)	B22	619	(2753)	.424	(10.77)	401	(1784)	267	(1187)
		B22A	1749	(7780)	.236	(5.99)	1749	(7780)	1355	(6027)
		B22X	5132	(22828)	.158	(4.01)	5132	(22828)	5132	(22828)
72	(1829)	B22	567	(2522)	.505	(12.83)	337	(1499)	225	(1001)
		B22A	1603	(7130)	.281	(7.14)	1603	(7130)	1139	(5066)
		B22X	4704	(20924)	.188	(4.77)	4704	(20924)	4704	(20924)
78	(1981)	B22	524	(2331)	.593	(15.06)	287	(1276)	191	(849)
		B22A	1480	(6583)	.330	(8.38)	1455	(6472)	970	(4315)
		B22X	4342	(19314)	.220	(5.59)	4342	(19314)	4270	(18994)
84	(2133)	B22	486	(2162)	.687	(17.45)	248	(1103)	165	(734)
		B22A	1374	(6112)	.383	(9.73)	1255	(5582)	837	(3723)
		B22X	4032	(17935)	.255	(6.48)	4032	(17935)	3682	(16378)
90	(2286)	B22	454	(2019)	.789	(20.04)	216	(961)	144	(640)
		B22A	1283	(5707)	.440	(11.17)	1093	(4862)	729	(3243)
		B22X	3763	(16738)	.293	(7.44)	3763	(16738)	3207	(14265)
96	(2438)	B22	425	(1890)	.898	(22.81)	190	(845)	126	(560)
		B22A	1202	(5347)	.500	(12.70)	961	(4275)	640	(2847)
		B22X	3528	(15693)	.334	(8.48)	3528	(15693)	2819	(12539)
102	(2591)	B22	400	(1779)	1.013	(25.73)	168	(747)	112	(498)
		B22A	1132	(5035)	.565	(14.35)	851	(3785)	567	(2522)
		B22X	3320	(14768)	.377	(9.57)	3320	(14768)	2497	(11107)
108	(2743)	B22	378	(1681)	1.136	(28.85)	150	(667)	100	(445)
		B22A	1069	(4755)	.633	(16.08)	759	(3376)	506	(2251)
		B22X	3136	(13949)	.422	(10.72)	3136	(13949)	2227	(9906)
114	(2895)	B22	358	(1592)	1.266	(32.15)	134	(596)	90	(400)
		B22A	1013	(4506)	.706	(17.93)	681	(3029)	454	(2019)
		B22X	2971	(13215)	.471	(11.96)	2971	(13215)	1999	(8892)
120	(3048)	B22	340	(1512)	1.403	(35.63)	121	(538)	81	(360)
		B22A	962	(4279)	.782	(19.86)	615	(2735)	410	(1824)
		B22X	2822	(12553)	.521	(13.23)	2706	(12037)	1804	(8024)

Based on simple beam condition using an allowable design stress of 25,000 psi (172 MPa) in accordance with MFMA, with adequate lateral bracing (see page 11 for further explanation). Actual yield point of cold rolled steel is 42,000 psi. To determine concentrated load capacity at mid span, multiply uniform load by 0.5 and corresponding deflection by 0.8. *Failure determined by weld shear.

Reference page 14 for general fitting and standard finish specifications.

PV Powered™

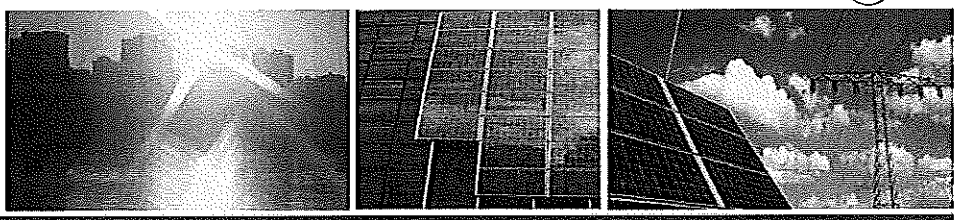

PVP-30kW-LV

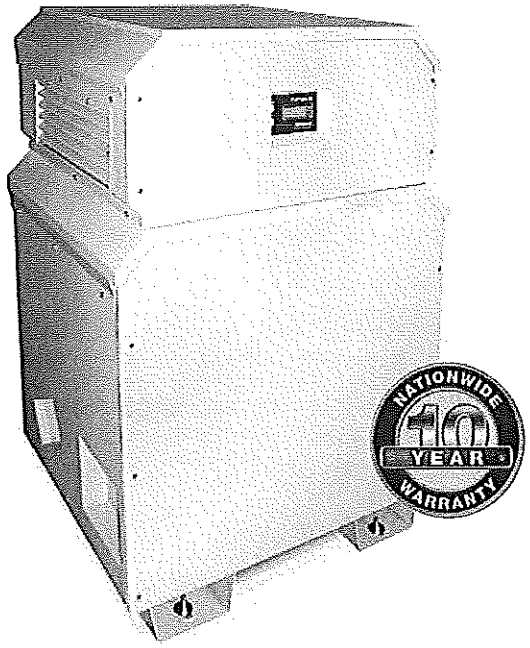

The single inverter solution for small commercial installations

PV Powered commercial inverters combine the benefits of high reliability, low lifetime cost and leading efficiency into one easy-to-install system. The cutting edge design features the latest advances in power technology including an intelligent power module that uses fifth generation, self-protecting IGBT silicon, the most efficient and reliable silicon technology available. System reliability is ensured by superior quality components including an integrated high-efficiency transformer, film-type capacitors, and a medical-grade DC power supply that provides clean, reliable power to system control components.

The PVP-30kW-LV is designed for trouble-free installation with load break rated AC and DC disconnects. The modular design enables rapid field service and field upgrades. With corrosion-resistant, aluminum construction and at half the size and weight of comparable products, it can quickly and easily be installed in your preferred location, indoors or out.

Performance Monitoring

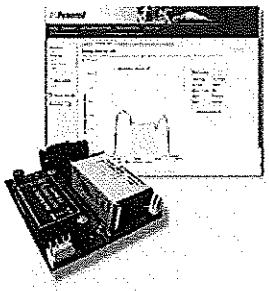

Performance monitoring solutions are available on all PV Powered inverters and include low cost, secure web-based access to PV system status and performance history.

FEATURES

- 295-600 VDC operating range
- Field-proven design with an exceptionally low part count
- Nationwide 10-year warranty standard, 20-year warranty optional
- AC auto-phasing simplifies installation
- Automatic night disconnect minimizes tare losses
- Soft start circuit eliminates a leading source of nuisance faults
- Innovative active cooling with sealed electronics keeps critical components cool and clean, maximizing life
- Neutral free installation saves time and money
- Web-based monitoring of critical system parameters standard

All PV Powered products are designed and manufactured in the U.S., are fully compliant with the Buy American Act, and qualify for projects funded by the federal stimulus package.

20720 Brinson Boulevard
PO Box 7348
Bend, OR 97708

1-541-312-3832
WWW.PVPOWERED.COM

©2009 PV Powered

DIMENSIONS
PVP-30kW-LV

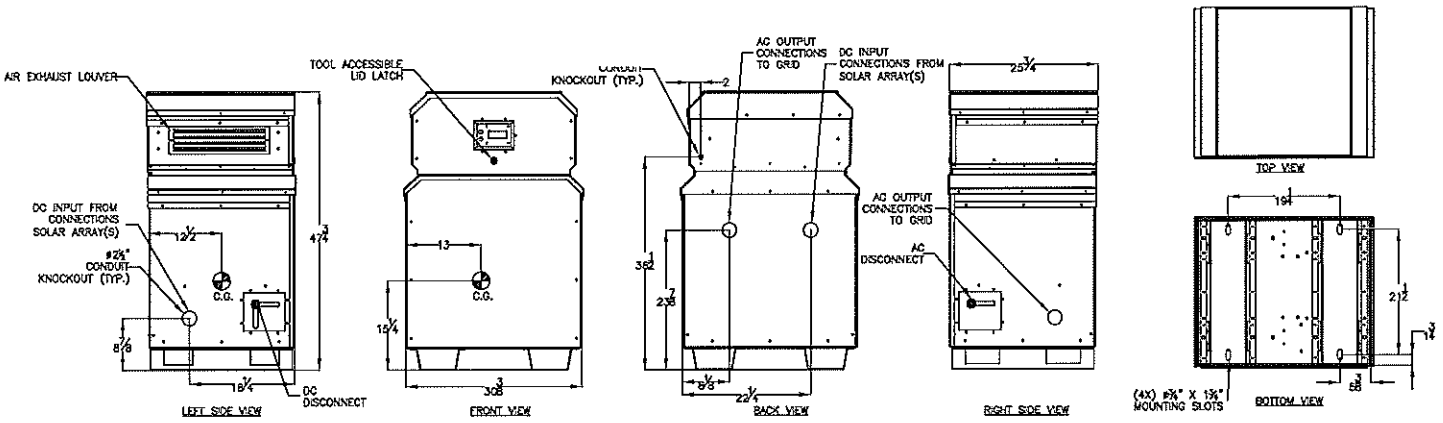

POWER CHARACTERISTICS

MODEL	PVP-30kW-LV
Continuous Output Power (kW)	30
Weighted CEC Efficiency (%)	
208	93.0
480	93.5
Maximum DC Input Voltage (VOC)	600
DC Peak Power Tracking Range (V)	295 - 500
DC Imp Nominal Current (A)	107
AC Nominal Voltage	208Y or 480Y
AC Operating Range (V)	
208	183 - 228
480	422 - 528
AC Frequency Range (Hz)	59.3 - 60.5
AC Maximum Continuous Current (A)	83 (208V), 36 (480V)
Standby Losses (W)	17
Harmonic Distortion (%THD)	<3%
Power Factor	>.99

MECHANICAL SPECIFICATIONS

MODEL	PVP-30kW-LV
Enclosure	NEMA 3R
Construction	Aluminum
Mounting	Pad Mount
Weight (lbs)	760
Cooling	Forced Convection
Temperature Range (°C)	-25 to 45
Isolation Transformer	Yes
Standards Approvals	UL 1741, IEEE 1547 Compliant
Electromagnetic Interference	FCC Class A for conducted, FCC Class B for radiated

©2009 PV Powered

Hyytinen Engineering
5458 Longley Lane, Suite B
Reno, NV 89511
Ph (775) 826-3019
Fax 9775) 826-3076
www.hyytinenengineering.com

JOB 3-11

SHEET NO. 12 OF

CALCULATED BY CWR DATE 3/1/11

CHECKED BY DATE

EQUIPMENT PVP-30kW-LV Inverter

W full =	760	lb
W empty =	760	lb
H unit =	4	ft
H base =	0	ft
H tot =	4.00	ft
Projected Area B1 =	2.50	ft, side 1
B1 Anchor Spacing =	1.75	ft
Projected Area B2 =	2.17	ft, side 2
B2 Anchor Spacing =	1.58	ft

WIND

Basic Wind Speed, V =	100	mph, 3s gust per local requirements
Exposure =	C	per local requirements
Iw =	1.00	ASCE 7, Table 6-1
Kz =	0.85	ASCE 7, Table 6-3
Kzt =	1.00	ASCE 7, Sec. 6.5.7.2
Kd =	0.85	ASCE 7, Table 6-4
qz = 0.00256(Kz)(Kzt)Kd)(V2)(Iw) =	18.5	psf
G =	0.85	ASCE 7, Sec. 6.5.8
h/D =	2.3	max
Cf =	1.4	ASCE 7. Fig. 6-21

F1=qz(G)(Cf)(Af1) =	220	lb	F2=qz(G)(Cf)(Af2) =	191	lb
OTM1 =	440	ft-lb	OTM2 =	382	ft-lb
MR1 =	360.24	ft-lb	MR2 =	399	ft-lb
Max. Uplift @ B1 =	-37	lb	Max. Uplift @B2 =	0	lb

SEISMIC (NON-STRUCTURAL COMPONENT)

Sds =	1.00		ASCE 7 Sec. 11.4
Ip =	1.00		ASCE 7 Sec. 13.1.3
ap =	1		ASCE 7 Table 13.6-1
Rp =	2.5		ASCE 7 Table 13.6-1
z =	0	ft, point of attachment ht.	
h =	4	ft, roof ht.	
Fp = 0.4(ap)(Sds)(Ip)(Wp)/Rp (1+2z/h) =	121.6	lb	ASCE 7 Eqn. 13.3-1
Fp min = 0.3(Sds)(Ip)(Wp) =	228	lb	ASCE 7 Eqn. 13.3-2
Fp max = 1.6(Sds)(Ip)(Wp) =	1216	lb	ASCE 7 Eqn. 13.3-3
Fp final =	228	lb	

F1 = 0.7Fp =	159.6	lb	F2 = 0.7Fp =	159.6	lb
OTM1 =	319	ft-lb	OTM2 =	319	ft-lb
MR1 =	360.24	ft-lb	MR2 =	399	ft-lb
Max. Uplift @ B1 =	0	lb	Max. Uplift @B2 =	0	lb

CONTROLLING LOADS

F1 =	220	lb, Wind	F2 =	191	lb, Wind
OTM1 =	440	ft-lb, Wind	OTM2 =	382	ft-lb, Wind
Max. Uplift @ B1 =	-37	lb, Wind	Max. Uplift @ B2 =	0	lb, Seismic

NOTE: SHEARS & UPLIFTS ARE NEGLIGIBLE

USE (4) 3/8" Ø x 3 1/2" EMBED WEDGE ANCHORS MIN.

EQUIPMENT SPECIFICATION SHEETS

FOR

Carson City Corporate Yard Salt/Cinder Building and Solar Photovoltaic Project

3303 Butti Way
Carson City, Nevada 89701

APN 10-031-04
Project No. 2.0821

PACIFICWEST
ENERGY SOLUTIONS
Conservation, Generation, Innovation
561 Keystone Ave. # 300 Reno, NV 89503
800-310-9080 Office/ 800-310-9596 Fax

ES-A SERIES
photovoltaic panels

200, 205, 210 & 215 W

evergreensolar®

CERTIFIED FOR COASTAL INSTALLATIONS

Made in the USA

ARRA Compliant

MORE electricity

Our ES-A series panels have the best power tolerance in the industry (-0/+5 W) and consistently deliver more electricity than competitors in field tests.

GUARANTEED POWER[1]
The minimum guaranteed power is the nameplate so you never get less power than you paid for.

INDEPENDENTLY VERIFIED POWER[2]
Four independent test labs regularly check panel power so you get the power we promise.

ANTI-REFLECTIVE GLASS
Delivering 2–3% more electricity compared to panels with standard glass.

TEMPERATURE RATINGS OVER 90%[3]
Maintaining up to 4% higher output than most other crystalline silicon panels under hot conditions.

HIGH RANKINGS IN FIELD TESTS[4]
Long-term Photon and TÜV field tests prove Evergreen panels produce more electricity (kWh/kW).

LESS impact

String Ribbon® panels have the smallest carbon footprint and fastest energy payback of any silicon-based solar panel ever made.

SMALLEST CARBON FOOTPRINT[5]
Our String Ribbon® wafers are made with a fraction of the emissions that result from making conventional silicon panels.

12-MONTH ENERGY PAYBACK[5]
Our panels begin generating truly clean electricity faster than any other silicon-based panel on the market.

100% CARDBOARD-FREE REUSABLE PACKAGING
Reduces disposal costs and on-site manpower while eliminating tons of landfill.

PV CYCLE

1 Guaranteed upon initial delivery of the panel to the customer, maximum power up to 4.99 W above nameplate rating; **2** Evergreen power testers calibrated by taking the straight average of test data from NREL, TÜV Rheinland PTL, TÜV Rheinland Cologne and Fraunhofer ISE; **3** Based on comparing PTC/STC ratings of major competing multi-crystalline silicon panel brands published by the California Energy Commission in May 2009; **4** 2008 Module Tests conducted by Photon and published in Photon International February 2009, TÜV Rheinland tests run from April to September 2008

5 Evaluation completed by the Energy Research Foundation of the Netherlands (ECN), May 2009

STRING RIBBON® SOLAR PANELS OFFERING EXCEPTIONAL PERFORMANCE AND INDUSTRY-LEADING ENVIRONMENTAL CREDENTIALS. IN SHORT, MORE ELECTRICITY AND LESS IMPACT.

*All Evergreen panels come with a 10 year workmanship and 25 year limited power warranty. For full details see the **Evergreen Solar Limited Warranty** available upon request or online. This product is certified to cUL 1703, UL 4703, UL Fire Safety Class C, IEC 61215 Ed.2, IEC 61730 Class A, IEC 61701 (salt mist corrosion) and FSEC standards. **String Ribbon** is a registered trademark of Evergreen Solar, Inc. Evergreen Solar's wafer manufacturing technology is patented in the United States and other countries.* *Copyright © Evergreen Solar, Inc 2011.*

www.tuv.com TÜVRheinland ID: 0000023716

CE IEC INTERTEK ETL LISTED c US

ELECTRICAL characteristics

Standard Test Conditions (STC)[1]

	ES-A-200 -fa3*	ES-A-205 -fa3*	ES-A-210 -fa3*	ES-A-215 -fa3*	
P_{mp}[2]	200	205	210	215	W
$P_{tolerance}$	-0/+4.99 (-0/+2.5)	-0/+4.99 (-0/+2.5)	-0/+4.99 (-0/+2.5)	-0/+4.99 (-0/+2.5)	W (%)
$P_{mp, max}$	204.99	209.99	214.99	219.99	W
$P_{mp, min}$	200.00	205.00	210.00	215.00	W
P_{ptc}[3]	180.7	185.4	190.0	194.6	W
η_{min}	12.7	13.1	13.4	13.7	%
V_{mp}	18.1	18.2	18.3	18.4	V
I_{mp}	11.05	11.27	11.48	11.69	A
V_{oc}	22.6	22.7	22.8	22.9	V
I_{sc}	11.80	11.93	12.11	12.30	A

Nominal Operating Cell Temperature Conditions (NOCT)[4]

T_{NOCT}	45.4	45.4	45.4	45.4	°C
P_{max}	146.4	150.1	153.8	157.4	W
V_{mp}	16.5	16.6	16.7	16.8	V
I_{mp}	8.87	9.04	9.21	9.37	A
V_{oc}	20.8	21.0	21.1	21.2	V
I_{sc}	9.44	9.57	9.76	9.95	A

Low Irradiance

The typical relative reduction of panel efficiency at an irradiance of 200 W/m² both at 25°C cell temperature and spectrum AM 1.5 is 0%.

Temperature Coefficients

γP_{mp}	-0.43	%/°C
βV_{mp}	-0.40	%/°C
αI_{mp}	-0.03	%/°C
βV_{oc}	-0.31	%/°C
αI_{sc}	+0.05	%/°C

System Design

Series Fuse Rating	20 A
Maximum DC System Voltage (UL)	600 V

*1 1000 W/m², 25°C cell temperature, AM 1.5 spectrum; 2 Maximum power point or rated power; 3 At PV-USA Test Conditions: 1000 W/m², 20°C ambient temperature, 1 m/s wind speed; 4 800 W/m², 20°C ambient temperature, 1 m/s wind speed, AM 1.5 spectrum; 5 Cell color may vary due to our unique manufacturing process but does not affect the performance of the panel; 6 Per UL 1703. When using Mounting Methods A3 (long side end mounting) or B (three rails) as described in the Mounting Guide for this product; 7 Per IEC 61215; * f-framed, a-low voltage, 3-matt blue (textured) cells and black anodized frame*

ELECTRICAL EQUIPMENT
CHECK WITH YOUR INSTALLER

MECHANICAL specifications

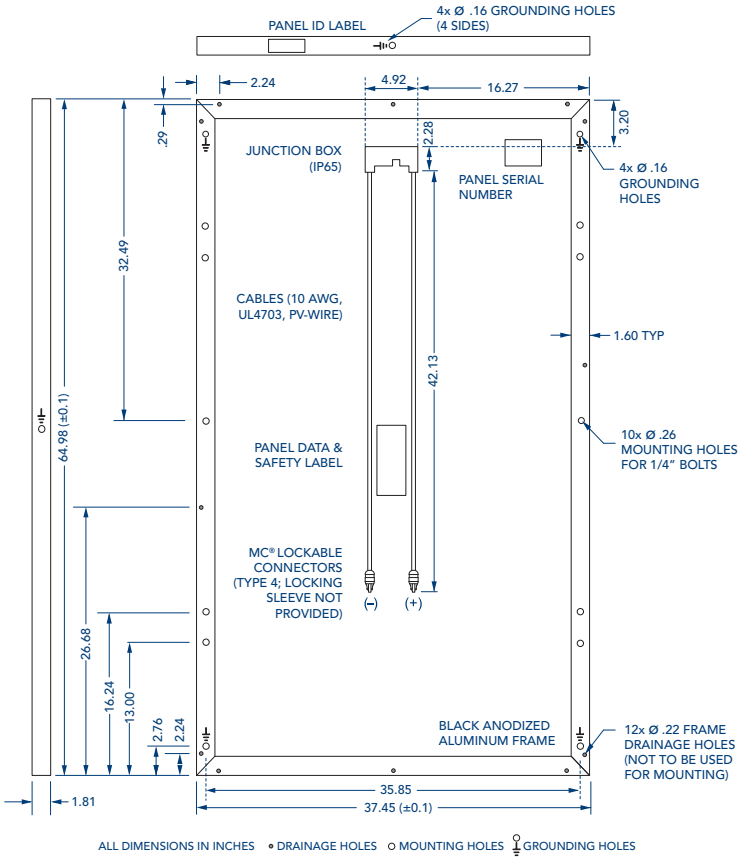

External Dimensions	65.0" x 37.5" x 1.8" / 1650.5 x 951.3 x 46 mm
Weight	41 lbs
Solar Cells[5]	114 Multi-Crystalline Silicon String Ribbon® Cells
Frame	Black Anodized Aluminum—Doubled Walled
Front Cover	Anti-Reflective Tempered Solar Glass 1/8" Thickness
Encapsulant / Back Cover	EVA / TPE
Maximum Certified Wind & Snow Load[6]	80 lbs/ft²
Hailstone Impact Test[7]	ø 1" ice ball at 23 m/s (52 miles/h)

Product packaged 28 per pallet and tested to International Safe Transit Association (ISTA) Standard 2B. All specifications in this product information sheet conform to EN 50380. See the Evergreen Solar Safety, Installation and Operation Manual, Mounting Guide and Inverter Selection Guide for further information on approved installation and use of this product.

Due to continuous innovation, research and product improvement, the specifications in this product information sheet are subject to change without notice. No rights can be derived from this product information sheet and Evergreen Solar assumes no liability whatsoever connected to or resulting from the use of any information contained herein. MC® is a registered trademark of Multi-Contact AG.

PARTNER

ES-A_200_205_210_215_fa3_US; effective January 1st 2011 *SM-0089 RevC*

Evergreen Solar Inc.
www.evergreensolar.com

WORLDWIDE HEADQUARTERS
Evergreen Solar Inc.
138 Bartlett Street, Marlboro, MA 01752, USA
T +1.508.357.2221 **F** +1.508.229.0747
info@evergreensolar.com

CUSTOMER SERVICE Americas and Asia
Evergreen Solar Inc.
138 Bartlett Street, Marlboro, MA 01752, USA
T +1.508.357.2221 **F** +1.508.229.0747
sales@evergreensolar.com

PVPowered™

PVP-30kW-LV

The single inverter solution for small commercial installations

PV Powered commercial inverters combine the benefits of high reliability, low lifetime cost and leading efficiency into one easy-to-install system. The cutting edge design features the latest advances in power technology including an intelligent power module that uses fifth generation, self-protecting IGBT silicon, the most efficient and reliable silicon technology available. System reliability is ensured by superior quality components including an integrated high-efficiency transformer, film-type capacitors, and a medical-grade DC power supply that provides clean, reliable power to system control components.

The PVP-30kW-LV is designed for trouble-free installation with load break rated AC and DC disconnects. The modular design enables rapid field service and field upgrades. With corrosion-resistant, aluminum construction and at half the size and weight of comparable products, it can quickly and easily be installed in your preferred location, indoors or out.

Performance Monitoring

Performance monitoring solutions are available on all PV Powered inverters and include low cost, secure web-based access to PV system status and performance history.

FEATURES

- 295-600 VDC operating range
- Field-proven design with an exceptionally low part count
- Nationwide 10-year warranty standard, 20-year warranty optional
- AC auto-phasing simplifies installation
- Automatic night disconnect minimizes tare losses
- Soft start circuit eliminates a leading source of nuisance faults
- Innovative active cooling with sealed electronics keeps critical components cool and clean, maximizing life
- Neutral free installation saves time and money
- Web-based monitoring of critical system parameters standard

All PV Powered products are designed and manufactured in the U.S., are fully compliant with the Buy American Act, and qualify for projects funded by the federal stimulus package.

20720 Brinson Boulevard
PO Box 7348
Bend, OR 97708

1-541-312-3832
WWW.PVPOWERED.COM

©2009 PV Powered

DIMENSIONS
PVP-30kW-LV

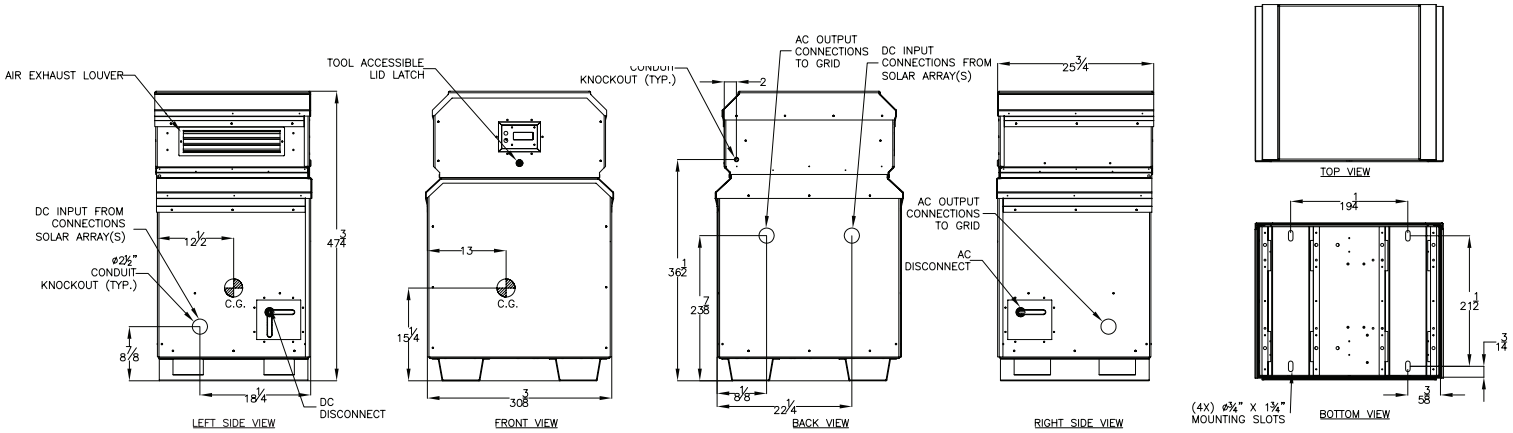

POWER CHARACTERISTICS

MODEL	PVP-30kW-LV
Continuous Output Power (kW)	**30**
Weighted CEC Efficiency (%)	
208	**93.0**
480	**93.5**
Maximum DC Input Voltage (VOC)	**600**
DC Peak Power Tracking Range (V)	**295 - 500**
DC Imp Nominal Current (A)	**107**
AC Nominal Voltage	**208Y or 480Y**
AC Operating Range (V)	
208	**183 - 228**
480	**422 - 528**
AC Frequency Range (Hz)	**59.3 - 60.5**
AC Maximum Continuous Current (A)	**83 (208V), 36 (480V)**
Standby Losses (W)	**17**
Harmonic Distortion (%THD)	**<3%**
Power Factor	**>.99**

MECHANICAL SPECIFICATIONS

MODEL	PVP-30kW-LV
Enclosure	**NEMA 3R**
Construction	**Aluminum**
Mounting	**Pad Mount**
Weight (lbs)	**760**
Cooling	**Forced Convection**
Temperature Range (°C)	**-25 to 45**
Isolation Transformer	**Yes**
Standards Approvals	**UL 1741, IEEE 1547 Compliant**
Electromagnetic Interference	**FCC Class A for conducted, FCC Class B for radiated**

©2009 PV Powered

Project:	
Type:	
Catalog #:	

MODEL VT3
Vapor Tight Fixture

HOUSING
- Corrosion resistant fiberglass housing
- Molded plastic latches
- Neoprene gasketed

OPTICAL SYSTEM
- DR Acrylic prismatic diffuser
- T8 or T5H0 lamping available
- 4' and 8' fixtures available
- Multi-Tap (120/277V)

MOUNTING
- Surface or pendant mount

CODE COMPLIANCE
- UL Listed for wet location

WARRANTY
- 1 year warranty

VT3

RF	.30		
RC	.80	.70	.50
RW	.50.30.10	.50 .30.10	.50 .30 .10
1	.27 .22 .18	.26 .21 .18	.24 .20 .16
2	.35 .29 .24	.33 .28 .23	.30 .26 .21
3	.41 .34 .30	.39 .33 .29	.35 .30 .27
4	.45 .40 .35	.44 .38 .34	.39 .35 .31
5	.51 .45 .41	.48 .43 .38	.43 .38 .35
6	.56 .51 .46	.54 .48 .44	.47 .43 .39
7	.61 .55 .50	.57 .52 .48	.50 .46 .42
8	.64 .59 .54	.60 .55 .51	.52 .49 .46
9	.68 .64 .59	.64 .59 .56	.56 .52 .50
10	.71 .68 .64	.67 .63 .60	.58 .55 .53

DIMENSIONS

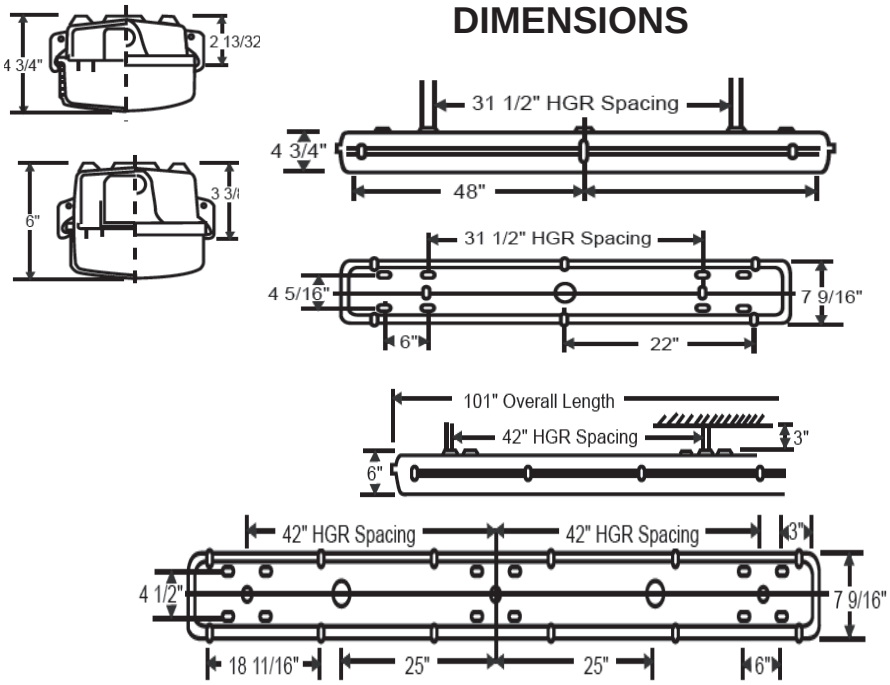

ORDERING INFORMATION

MODEL	LAMPS	VOLTAGE	OPTIONS
VT3	2x32	MT - Multi Tap	EM500 - 500 Lumen Emergency Ballast
	2x32T (Tandem)		EM800 - 800 Lumen Emergency Ballast
	2x54		EM1300 - 1300 Lumen Emergency Ballast
	2x54T (Tandem)		EM1400 - 1400 Lumen Emergency Ballast
	2x59		
	2x96		

MODEL	LAMPS	VOLTAGE	OPTIONS
_____ -	_____ -	_____ -	_____

Specifications and dimensions subject to change without notice.

EELP Lighting • 15 Lantern Lane, Cherry Hill, NJ 08002 • Phone: 800-490-4496 • Fax: 877-634-6887 • www.eelplighting.net

Project:	
Type:	
Catalog #:	

Model FL7-IND

Induction Flood Light

HOUSING
- Heavy duty die cast aluminum housing and hinged top frame
- Tempered flat glass lens
- Powder coated bronze finish
- 1/2" Coin plugs for conduit and photocell
- OxyShield 9-stage anti-oxidation process

ELECTRICAL
- 120V
- 277V

OPTICAL SYSTEM
- Wide, secular aluminum reflector standard
- Segmented, faceted Type 5 reflector available
- 150, 200 and 300W units available (300W for wide reflectored units only)
- 5000K lamp standard

MOUNTING
- Includes swivel bracket
- Yoke, wall mount bracket and extruded arms (for pole mount) available

CODE COMPLIANCE
- CSA Listed for Wet Location
- Meets UL requirements

WARRANTY
- 10 year warranty

FL7-V

FL7-W

FL7-IND

DIMENSIONS

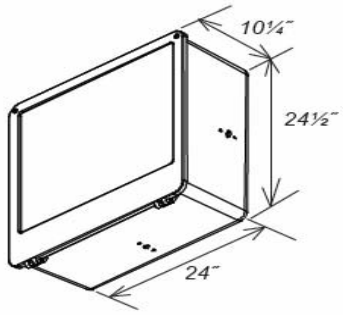

ORDERING INFORMATION

MODEL	WATTAGE	REFLECTOR	VOLTAGE	OPTIONS	
FL7	100I	Blank - Wide Standard	120 - 120V	PC1	- 120V Photocell
	200I	V - IES Type 5	277 - 277V	PC2	- 277V Photocell
	300I (2x150W)			WG	- Wireguard
				GS	- Glare Shield
				LG	- Polycarbonate Vandal Shield
				TM	- Pole Tennon Mount
				BF	- Aluminum Baffle
				SF	- Slip Fitter
				LY	- Large Yoke
				WM	- Wall Mount Bracket
				AM	- Adjustable Mounting Arm
				FLEM6*	- 6" Extruded Aluminum Arm
				CC	- Custom Color

** Add an 'S' for square pole, 'R' for round pole*

MODEL	WATTAGE	REFLECTOR	VOLTAGE	OPTIONS
_____ -	_____ -	_____ -	_____ -	_____

Specifications and dimensions subject to change without notice.

EELP Lighting • 15 Lantern Lane, Cherry Hill, NJ 08002 • Phone: 800-490-4496 • Fax: 877-634-6887 • www.eelplighting.net

Project:	
Type:	
Catalog #:	

Model WP3

Medium Wall Pack

HOUSING
- Heavy duty die cast aluminum housing w/ powder coated bronze finish
- Corrosion resistant housing and hardware
- OxyShield 9-stage anti-oxidation process
- Silicone rubber gasket
- 1/2" coin plugs with O-rings for conduit and photocell

ELECTRICAL
- 120V, Multi-tap (120/277V) or Quad-tap (120/208/240/277V) input
- 480V

OPTICAL SYSTEM
- Anodized aluminum reflector
- High-impact, heat-resistant, prismatic borosilicate lens
- Available with Compact Fluorescent (26 to 84 watt), Metal Halide (35 to 175 watt), Pulse Start Metal Halide (175 watt) or High Pressure Sodium (70 to 150 watt) lamps
- Medium base, glazed porcelain socket pulse rated for 4KV, universal 4 pin socket (CF) or 5KV pulse rated mogul base

MOUNTING
- Template cast for mounting over 4" recessed box or use 1/2" surface conduit

CODE COMPLIANCE
- CSA Listed for wet location
- Meets UL requirements

WARRANTY
- 1 year warranty

WP3

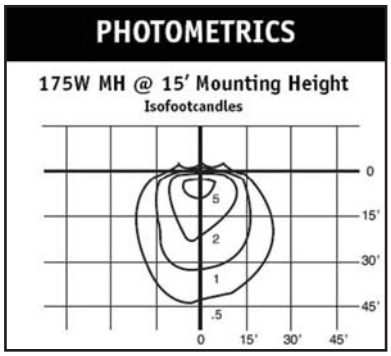

DIMENSIONS

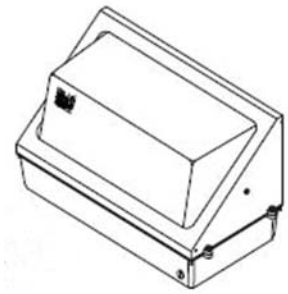

14 ¼" W x 9" H x 7 ¼"D

ORDERING INFORMATION

MODEL	WATTAGE			VOLTAGE	OPTIONS	ACCESSORIES
WP3	**(HPS)**	**(Metal Halide)**	**(Fluorescent)**	120V*	Blank - Standard Bronze Color	PC1 - 120V Photocell
	35H	50M (MT Only)	(MT Only)	MT		PC2 - 208-277V Photocell
	50H	70M	1x26CF	QT	B - Black	WP3FC - Full Cutoff
	70H	100M	1x32CF	480V	W - White	WP3SC - Side Cutoff
	100H	150M	1x42CF		CC - Custom Color (Contact Factory)	WP3LG - Polycarbonate Vandal Guard
	150H	175M	2X26CF			
			2X32CF		EB1 - 1 Lamp Emergency (26W, 32W, 42W)	WP3WG - Wireguard
			2x42CF			
					EB2 - 2 Lamp Emergency (26W, 32W)	

MODEL	WATTAGE	VOLTAGE	OPTIONS	ACCESSORIES
-	-	-	-	-

Specifications and dimensions subject to change without notice.

EELP Lighting • 15 Lantern Lane, Cherry Hill, NJ 08002 • Phone: 800-490-4496 • Fax: 877-634-6887 • www.eelplighting.net