STRUCTURAL NOTES
WAYNE H. REID, S.E. 490 Hot Springs Rd. Carson City, NV 89706
(775) 230-2747, Fax (775) 882-4016

SCOPE:
The scope of this work is limited to the structural elements only. Items relating to architectural, mechanical, electrical, fire safety, roofing site issues, drainage, etc., are the responsibility of others.

DESIGN /CONSTRUCTION CRITERIA
Code: 2006 IBC and AISC7-05 and codes referenced therein.

All workmanship and materials shall conform to the IBC, and all other codes and standards referenced therein.

DESIGN LOADS:
BUILDING CATEGORY II

FLOORS: Mezzanine Floor 125 psf

WIND LOAD: Not Applicable.

SEISMIC LOAD: Ss = 159%, S1 = 60% (for site class B)
Site Class D, Seismic Use Group I, Seismic Design Category D
I=1.0, R=6.5, Sigma = 2.5

FOUNDATIONS: (IBC CH18)
Existing slab on grade is adequate to carry the new bearing walls, see plan for qualification.

REINFORCEMENT: (IBC CH19 AND CH21)
All reinforcement shall be ASTM A 615, grade 60. Lap splice all rebar 40 diameters in concrete and 50 diameters in masonry, but not less than 24". Welding of reinforcement shall conform to AWS D1.4

Provide matching corner bars for all horizontal bars, with each leg 24" or longer. Provide matching dowels for all vertical bars, with minimum standard hook and lap length. At intersections, extend bars to opposite face and provide matching corner bars.

Provide minimum 3" concrete cover where bars are in contact with earth or weather, UNO. Place reinforcement in slabs 1-1/2" clear from top, UNO.

All reinforcement shall be securely tied in place prior to placing concrete.

PNEUMATIC OR POWER-DRIVEN STEEL STUDS AND NAILS (SHOT PINS)
Shot pins for attaching 2x wood plates to concrete shall be Hilti X-CP 72 P8X23 or SS316 X-CR-. 72 P8S23, 2 7/8" long, 0.145" Diam with 0/905" 16 gauge washers. Design and installation shall be as specified by the Manufacturer and is covered under ICBO ER Report No. 1290 for similar pins. These pins are acceptable for Use with untreated and pressure-treated lumber with Medium Exposure.

Unless noted otherwise, minimum spacing is 4" and maximum spacing is 18" for structural walls. Minimum edge distance is 1 4" for walls where spacing is 18" or greater and 3" for shear walls where spacing is less than 18", unless specifically noted otherwise

WOOD (IBC CH 23)
Sawn Lumber shall be Douglas Fir-Larch, and shall have the following minimum grades per IBC 2303, unless noted otherwise on plans.

DESCRIPTION	GRADE	
2x and 4x members	No. 2	Moisture Content (MC) at time of
6x & larger	No. 1	of Fabrication shall not Exceed 19%
Beams & Stringers	No. 1	((If MC exceeds 19%, design
Post & Timbers	No. 1	modifications will be required))

Sole Plates and wood within 6" of earth shall be pressure treated Douglas Fir-Larch, No. 2.

Nailing of plywood sheathing for walls and floors shall be as indicated on the plans or in these notes, whichever is the most restrictive. The following abbreviations are used to designate nailing in details and schedules:
BN Boundary nailing. Typical to all blocking over walls and elements indicated to act chords or collectors.
CN Continuous plywood edge nailing. Nailing of plywood panel edges where the edges of consecutive panels fall on the same framing member. Unless noted otherwise, CN shall the same as EN.
EN Edge nailing. Nailing o supported plywood panel edges.
FN Field nailing. Nailing to interior supports.

Headers: The following definitions apply:
T = Trimmer Stud/Post. Where more than double trimmers are called for, tie header to trimmers with ST2122, UNO.
K = King Stud/Post. For studs, nail first to beam with 2 columns of 16d @ 3" over the beam depth. (min 4 - 16d). UNO
S = Single (stud)
D = Double (stud)

PLYWOOD FLOOR SHEATHING shall be APA span rated sheathing, Exposure I.
Use 3/4" Sturd-I-Floor, UNO
minimum nailing: BN=CN=EN=6", CN=FN=12", use 10d ring or screw shank nails.

Lay plywood for floors and roofs with face grain perpendicular to joist span with end joints staggered. Where panels are less than 24" wide, blocking shall be required on all edges.

Provide 1/8" gap between sheets as recommended by APA.

TJI's, LVL's, PSL - MANUFACTURED MEMBERS:
All manufactured plywood web I joists and manufactured beams shall be as manufactured by Trus Joist, or approved equal. Installation of accessories, including web stiffeners, shall be as specified by the manufacturer.

TJI's shall conform to ICC ES Report No. ESR-1153

Use the following grades as a minimum. Conform to ICC ES Report No. ESR 1387
LVL's 2.0E PSL's, 2.0E

FRAMING FASTENERS AND HARDWARE:
Nails are to be common nails. Space nails as required to prevent splitting wood, with a minimum spacing of 11 diameters and a minimum edge distance of 4 diameters. If necessary, predrill holes with a bit diameter equal to the next smaller nail diameter. Nails which are to be exposed shall be either zinc coated, aluminum alloy wire, or stainless steel conforming to IBC 2304.9.5. Minimum nailing shall be per IBC table 2304.9.1.

All framing hardware shall be as manufactured by the Simpson Strong-Tie Company, or approved equal. Substitutions shall have the appropriate ICBO approvals. Installations shall be as indicated in the catalogs, UNO. Use the fasteners specified for the maximum connector load capacities, UNO.

NAIL SPECIFICATIONS:
All nails are to be Common nails and shall conform to the following table. Nails less than the standard length may be used for attachment of plywood, etc., provided the length is sufficient to provide the minimum penetration of the nail into the member accepting the point (framing member) indicated.

WAYNE H. REID, S.E.
STRUCTURAL ENGINEER
490 HOT SPRINGS RD.
CARSON CITY, NV 89706
(775) 230-2747
waynehr@project-view.com

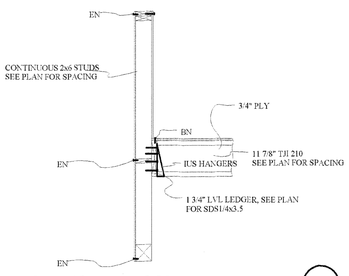

SECTION AT DOOR (103)
SCALE 1/2" = 1'-0"

INTERIOR SHEAR WALL (102)
SCALE 1/2" = 1'-0"

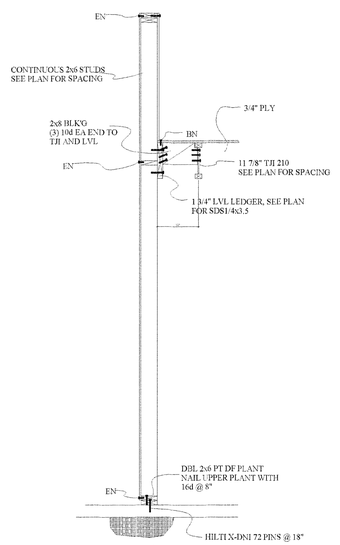

BALLON FRAME WALL (101)
SCALE 1/2" = 1'-0"

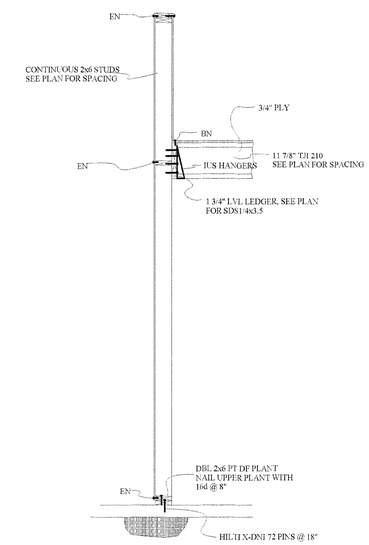

BALLON FRAME WALL (100)
SCALE 1/2" = 1'-0"

SEE ARCH FOR DIMENSIONS.

LEDGER SCHEDULE
L1 1 3/4"x11 7/8" LVL LEDGER WITH (4) SDS1/4x4 TO (E) STUDS @ 16" (NOTIFY ENGINEER IF STUDS ARE NOT 2x6 @ 16")
L2 1 3/4"x11 7/8" LVL LEDGER WITH (4) SDS1/4x4 TO (N) STUDS @ 16"
L3 1 3/4"x11 7/8" LVL LEDGER WITH (2) SDS1/4x4 TO (E) STUDS @ 16", OR EQUAVILENT TO A NET SPACING OF 8"oc
L4 1 3/4"x11 7/8" LVL LEDGER L2, CONTINUES OVER CORRIDOR AS A BEAM

FLOOR SHEATHING
3/4" STURD - I - FLOOR. GLUE AND FASTEN TO SUPPORTS W/ 10d RING OR SCREW SHANK, EN=BN=6", FN=10"

NEW BEARING WALLS - P1
P1 SHEAR WALLS, SHEATH WITH MIN 3/8" PLY.
NAIL W/ 8d, EN=6", FN=12", BLOCK EDGES
2x6 PT DF SOLE PLATE, FASTEN WITH
HILTI X-DNI 72 PINS @ 18" MAX, AND WITHIN 4" OF ENDS

FOOTINGS
FOOTINGS ARE NOT REQUIRED PROVIDED THE (E) SLABS ARE A MINIMUM 4" THICK AND THERE ARE NO JOINTS PARALLEL TO THE BASE OF BEARING WALLS, WITHIN 24" OF WALL. THE CONTRACTOR SHALL NOTIFY THE EOR IF SUCH JOINTS OCCUR, FOR FURTHER DIRECTION.

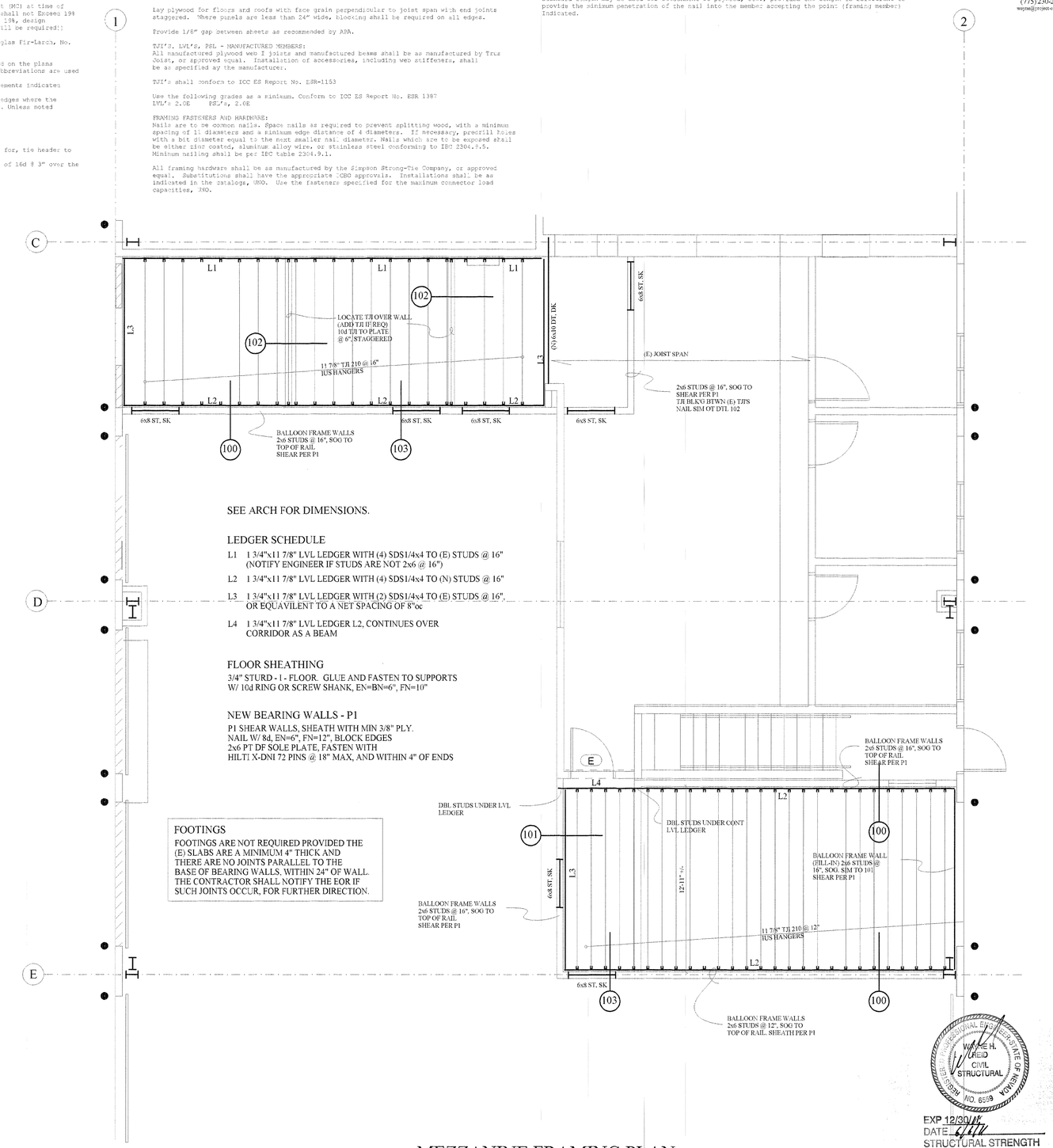

MEZZANINE FRAMING PLAN

REGISTERED PROFESSIONAL ENGINEER STATE OF NEVADA
WAYNE H. REID
CIVIL
STRUCTURAL
NO. 6599
EXP 12/30/11
DATE 4/4/11
STRUCTURAL STRENGTH ONLY

J.P. COPOULOS ARCHITECT

P.O. Box 2517
Carson City
Nevada
89702

T 775-885-7907
F 775-885-6806

www.jpcarchitect.com

Client Contact:
Tom Grundy, P. E.
Carson City Public Works
3505 Butti Way
Carson City, NV 89701
Phone: 775-887-2355
Fax: 775-887-2112

Job Address:
3505 Butti Way
Carson City, NV 89701
A.P.N. 10-031-04

No.	Description	Date
	BID SET	7/8/09

PUBLIC WORKS T.I. BLDG "C"

STRUCTURAL FRAMING

Project number	211391
Date	4/23/2011
Drawn by	WHR
Checked by	WHR

S1

Scale 1/4" = 1'-0"