CARSON CITY PUBLIC WORKS
CARSON CITY, NEVADA

WASTEWATER RECLAMATION PLANT
DIGESTER REHABILITATION PROJECT - PHASE I

VOLUME 2 OF 2

CARSON CITY CIP NO.5.1301

APRIL 2013

BOARD OF SUPERVISORS

ROBERT CROWELL, MAYOR

KAREN ABOWD, WARD 1

BRAD BONKOWSKI, WARD 2

JOHN McKENNA, WARD 3

JIM SHIRK, WARD 4

NOTE:

SIGNATURE OF THESE PLANS SHALL NOT BE CONSTRUED TO BE A PERMIT FOR OR AN APPROVAL OF ANY VIOLATION OF CITY OF CARSON CITY RULES, REGULATIONS, OR DESIGN AND CONSTRUCTION STANDARDS.

Approved: _____

JEFF SHARP, P.E. DATE
CITY ENGINEER

Approved: _____

DARREN SCHULZ, P.E. DATE
DEPUTY PUBLIC WORKS DIRECTOR

The undersigned has approved this document for and on behalf of Carollo Engineers, INC.

Vice President

carollo®
1325 AIRMOTIVE WAY, STE. 175
RENO, NV. 89502
775-324-4427

VERIFY SCALES
BAR IS ONE INCH ON ORIGINAL DRAWING
0 1"
IF NOT ONE INCH ON THIS SHEET, ADJUST SCALES ACCORDINGLY

DESIGNED CE
DRAWN OB
CHECKED CHK
DATE APRIL 2013

carollo®

PROFESSIONAL ENGINEER - STATE OF NEVADA
JOSE C. MACHADO JR.
Exp: 12-31-13
CIVIL
No. 18792

REV.	DATE	DESCRIPTION	BY	APP'D

CARSON CITY PUBLIC WORKS
DIGESTER REHABILITATION PROJECT – PHASE I
CARSON CITY CIP NO. 5.1301
GENERAL
TITLE SHEET

DRAWING NO.
G-01

SHEET NO.
1 OF 20

Plot Date: 24-APR-2013 9:13:40 AM
User: AFerrer
Model: Layout1 ColorTable: gshade.ctb DesignScript: Carollo_Std_Pen_v0905.pen PlotScale: 1:1
LAST SAVED BY: aferrer
PROJECT NO. 9072A10 FILE NAME: 9072A10_G-01.dwg

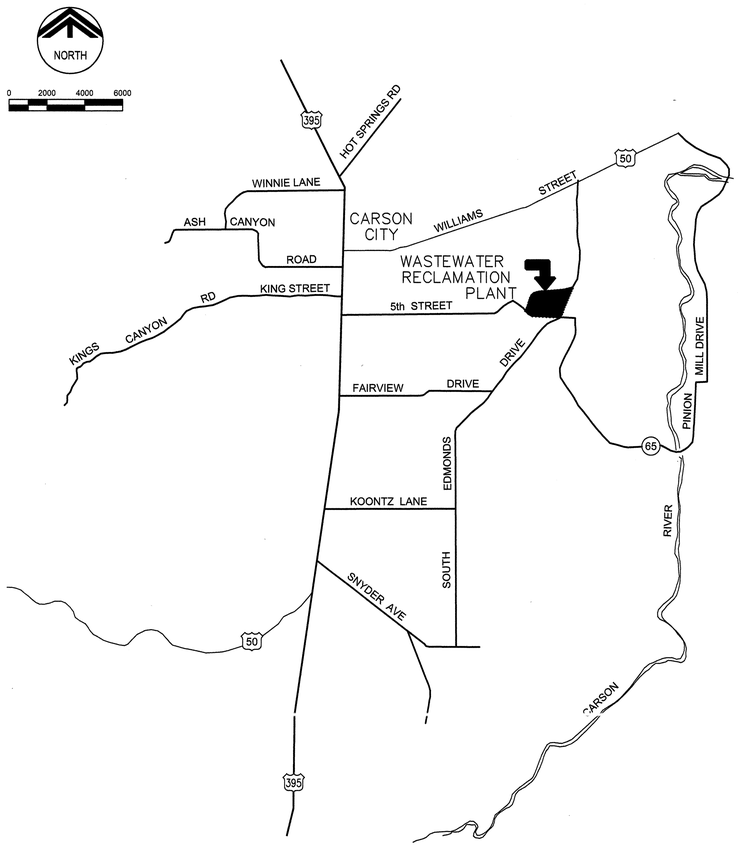

LOCATION MAP

GENERAL NOTES:

1. THE CONTRACTOR SHALL VERIFY ALL DIMENSIONS BEFORE STARTING WORK AND SHALL IMMEDIATELY NOTIFY THE ENGINEER OF ANY DISCREPANCIES.
2. UNLESS DETAILED, SPECIFIED, OR OTHERWISE INDICATED ON THE DRAWINGS, CONSTRUCTION SHALL BE AS INDICATED IN THE APPLICABLE DETAILS AND GENERAL NOTES. DETAILS SHALL APPLY EVEN THOUGH NOT REFERENCED AT SPECIFIC LOCATIONS ON DRAWINGS.
3. WHERE NO DETAILS ARE SHOWN OR NOTED FOR ANY PART OF WORK, DETAILS SHALL BE THE SAME AS FOR OTHER SIMILAR WORK.
4. SEE DRAWING S-1 FOR STRUCTURAL NOTES.
5. ◇ - INDICATES NOTE REFERENCED ON DWG.
6. "STANDARD DETAILS" REFERS TO STANDARD DETAILS FOR PUBLIC WORKS CONSTRUCTION. SEE VOLUME 1 OF 2 OF THE CONTRACT DOCUMENTS.

SURVEY CONTROL

1. BASIS OF BEARING AND COORDINATES IS THE CARSON CITY COORDINATE SYSTEM.
2. VERTICAL DATUM IS USGS MSL.
3. HORIZONTAL CONTROL: CONTROL POINT "230151L" IS LOCATED AT N1,609,558.00 E174,277.95 (ALSO THE W 1/4 S15,T15N,R20E, MDM). CONTROL POINT "LYN" IS LOCATED AT N1,619,315.69 E188,812.73 (MONUMENTED WITH A 3-1/4" ALUMINUM CAP SITUATED ON TOP OF A HILL WITHIN THE N 1/2 SE 1/4 S1, T15N, R20E, MDM ON THE NORTHWEST SIDE OF THE CARSON CITY LANDFILL PROPERTY).
4. VERTICAL CONTROL: ELEVATION OF CONTROL POINT "230151L" IS 4620.00'.

SHEET INDEX

GENERAL DRAWINGS

1. G-01 TITLE SHEET
2. G-02 LOCATION MAP AND SHEET INDEX
3. G-03 ABBREVIATIONS
4. G-04 LEGENDS AND SYMBOLS

DEMOLITION

5. D-01 DIGESTER - OVERALL ROOF PLAN
6. D-02 DIGESTER - PARTIAL PLAN AND SECTIONS

STRUCTURAL DRAWINGS

7. S-01 STRUCTURAL NOTES
8. S-02 DIGESTER - OVERALL ROOF PLAN
9. S-03 DIGESTER - PARTIAL PLAN AND SECTIONS
10. S-04 DIGESTER - DETAILS

PROCESS DRAWINGS

11. P-01 DIGESTER - TOP PLAN
12. P-02 DIGESTER - SECTION AND DETAILS

ELECTRICAL DRAWINGS

13. E-01 LEGEND, SCHEDULE, DETAILS
14. E-02 DIGESTER TOP PLAN

TYPICAL DETAILS

15. T-01 TYPICAL DETAILS 1
16. T-02 TYPICAL DETAILS 2
17. T-03 TYPICAL DETAILS 3
18. T-04 TYPICAL DETAILS 4
19. T-05 TYPICAL DETAILS 5
20. T-06 TYPICAL DETAILS 6

VERIFY SCALES
BAR IS ONE INCH ON ORIGINAL DRAWING
0 1"
IF NOT ONE INCH ON THIS SHEET, ADJUST SCALES ACCORDINGLY

DESIGNED CE
DRAWN OB
CHECKED CHK
DATE APRIL 2013

carollo

PROFESSIONAL ENGINEER - STATE OF NEVADA
JOSE C. MACHADO JR.
Exp. 12-31-13
CIVIL
No. 18792

REV.	DATE	DESCRIPTION	BY	APP'D

CARSON CITY PUBLIC WORKS
DIGESTER REHABILITATION PROJECT – PHASE I
CARSON CITY CIP NO. 5.1301
GENERAL
LOCATION MAP AND SHEET INDEX

DRAWING NO.
G-02

SHEET NO.
2 OF 20

PROJECT NO. 9072A10 FILE NAME: 9072A10_G-02.dwg

LAST SAVED BY: aferrer Model: Layout1 ColorTable: gshade.ctb DesignScript: Carollo_Std_Pen_v0905.pen PlotScale: 1:1 User: AFerrer Plot Date: 22-APR-2013 9:19:07 AM

Plot Date: 22-APR-2013 9:19:26 AM User: AFerrer PlotScale: 1:1 DesignScript: Carollo_Std_Pen_v0905.pen ColorTable: gshade.ctb Model: Layout1 LAST SAVED BY: aferrer

PIPE SERVICE ABBREVIATIONS

ABBREVIATION	DESCRIPTION
A:	
ASE	ACTIVATED SLUDGE EFFLUENT
AA	AERATION AIR
C:	
CAUSTIC	SODIUM HYDROXIDE (CAUSTIC SODA)
CC	CARSON CITY
CE	CHLORINATED EFFLUENT
CFA	COMPRESSED FILTER AIR
CD	CHEMICAL DRAIN
CS	CHLORINE SOLUTION
CW	CITY WATER
D:	
D	DRAIN
DC	DECANT
DG	DIGESTER GAS
DS	DIGESTED SLUDGE
E:	
EC	ELECTRICAL CONDUIT
F:	
FA	FOUL AIR DUCT
FC	FILTER COAGULANT
FE	FINAL EFFLUENT
FDR	FILTER DRAIN
FE	FILTER EFFLUENT
FI	FILTER INFLUENT
FRW	FILTER REJECT WATER
FW	FIRE WATER
H:	
HPA	HIGH PRESSURE AIR
HWR	HOT WATER RETURN
HWS	HOT WATER SUPPLY
HYPO	SODIUM HYPOCHLORITE
M:	
ML	MIXED LIQUOR
N:	
NG	NATURAL GAS
P:	
PD	PUMPED DRAIN
PE	PRIMARY EFFLUENT
PI	PRIMARY INFLUENT
POL	POLYMER
POLS	POLYMER SOULUTION
PS	PRIMARY SLUDGE
PW	PLANT WATER
R:	
RAS	RECYCLED ACTIVATED SLUDGE
RD	ROOF DRAIN
RECYCLE	DAF RECYCLE
RS	RAW SLUDGE
RW	RAW WASTEWATER
RWBP	RAW WASTEWATER BYPASS
S:	
SC	SCUM
SSC	SECONDARY SCUM
SD	STORM DRAIN
SE	SECONDARY EFFLUENT
SN	SECONDARY SCUM
SS	SANITARY SEWER
SSC	SUPERNATANT
SPW	SPRAY WATER
T:	
TFE/TF	TRICKLING FILTER EFFLUENT
TFBP	TRICKLING FILTER BYPASS
TWAS	THICKENED WASTE ACTIVATED SLUDGE
W:	
WAS	WASTE ACTIVATED SLUDGE
1W	NO. 1 WATER
2W	NO. 2 WATER
3W	NO. 3 WATER
3WS	SOFTENED NO. 3 WATER

STANDARD ABBREVIATIONS

ABBREVIATION	DESCRIPTION
A:	
@	AT
A	AMPERES
AB	ANCHOR BOLT, AGGREGATE BASE
ABAND or ABND	ABANDONED
AC	ASPHALTIC CONCRETE
A/C	AIR CONDITIONING
ACOUS	ACOUSTIC
ACP	ASBESTOS CEMENT PIPE
ADD	ADDENDUM, ADDITION (AL)
ADPT	ADAPTER
AL or ALUM	ALUMINUM
ALT	ALTERNATE
ALUM	ALUMINUM SULPHATE
AMB	AMBIENT
ANC	ANCHOR
APPROX	APPROXIMATE
ARCH	ARCHITECTURAL
AR	AIR RELEASE
ARV	AIR RELIEF VALVE
ASL	ASH SLURRY
AT	ALUMINUM THRESHOLD
ATM	ATMOSPHERE
AUTO	AUTOMATIC
AUX	AUXILIARY
AV	ANGLE VALVE
AVG	AVERAGE
B:	
BC	BEGINNING OF CURVE
BF	BLIND FLANGE
BKHD	BULKHEAD
BKR	BREAKER
BL	BASE LINE
BLDG	BUILDING
BLK	BLOCK
BLKG	BLOCKING
BM	BEAM/BENCHMARK
BO	BLOWOFF
BOD	BIOCHEMICAL OXYGEN DEMAND
BOT	BOTTOM
BP	BYPASS
BRKT	BRACKET
BRZ	BRONZE
BSP	BLACK STEEL PIPE
BTU	BRITISH THERMAL UNIT
BU	BUILT-UP
BUV or BTV	BUTTERFLY VALVE
BV	BALL VALVE
C:	
CAP	CAPACITY
CB	CATCH BASIN
CC	CENTER TO CENTER
CCP	CONCRETE CYLINDER PIPE
CCPW	CARSON CITY PUBLIC WORKS
CCSP	CEMENT MORTAR LINED & COATED STEEL PIPE
CD	CEILING DIFFUSER
CEM	CEMENT
CFH	CUBIC FOOT PER HOUR
CFM	CUBIC FOOT PER MINUTE
CFS	CUBIC FOOT PER SECOND
CG	COMPOUND GAUGE or CHLORINE GAS
C & G	CURB AND GUTTER
CHKR	CHECKER
CIP	CAST IRON PIPE
CIRCUM	CIRCUMFERENCE
CISP	CAST IRON SOIL PIPE
CJ	CONSTRUCTION JOINT
CKT	CIRCUIT
CL	CHLORINE OR CLEARANCE
CL or ℄	CENTER LINE
CLAR	CLARIFIER
CLG	CEILING
CLK	CLOCK
CLR	CLEAR
CMP	CORRUGATED METAL PIPE
CMU	CONCRETE MASONRY UNIT
CND	CONDUIT
CO	CLEANOUT
COD	CHEMICAL OXYGEN DEMAND
CONC	CONCRETE
COL	COLUMN
COLL	COLLECTOR
COMP	COMPRESSOR
COMPT	COMPARTMENT
CON	CONCENTRIC
COND	CONDUCTOR OR CONDENSATE
CONN	CONNECTION
CONST	CONSTRUCTION
CONT	CONTINUATION (OUS)(ED)
CP	NON-REINFORCED CONCRETE PIPE
CPI	CONTROL POWER INTERLOCK
CPLG	COUPLING
CPT	CONTROL POWER TRANSFORMER
CPVC	CHLORINATED POLYVINYL CHLORIDE PIPE
CREJ	CORRUGATED RUBBER EXPANSION JOINT
CS	CHLORINE SOLUTION
CSK	COUNTERSUNK
CT	CURRENT TRANSFORMER
CTR	CENTER
CU	CONTROL UNIT OR COPPER PIPE
CV	CHECK VALVE
CW	COLD WATER
CYL	CYLINDER
D:	
D	DRAIN
DAF	DISSOLVED AIR FLOTATION
DBL	DOUBLE
DCI	DUCTILE CAST IRON
DCG	DECOMPOSED GRANITE
DE	DENSITY METER
DEG	DEGREE
DET	DETAIL
DF	DOUGLAS FIR
DFD	DUCT FIRE DAMPER
DG	DIGESTER GAS
DI	DROP INLET
DIA	DIAMETER
DIAG	DIAGRAM
DIF	DIFFUSER
DIFF	DIFFERENTIAL
DIG	DIGESTER
DIP	DUCTILE IRON PIPE
DIS	DISTILLED WATER
DISCH	DISCHARGE
DIZ	DEIONIZED WATER
DM	DAMPER MOTOR
DN	DOWN
DO	DISSOLVED OXYGEN
DR	DOOR
DS	DIGESTED SLUDGE OR DOWNSPOUT
DT	DRIP TRAP
DUP	DURIRON PIPE
DV	DIAPHRAGM VALVE
DW	DISHWASHER
DWG	DRAWING
E:	
E	EASTING
EA	EACH
EC	END OF CURVE
ECC	ECCENTRIC
ED	EQUIPMENT DRAIN
EDF	ELECTRIC DRINKING FOUNTAIN
EE	EACH END
EF	EXHAUST FAN OR EACH FACE
EFF	EFFLUENT
EJ	EXPANSION JOINT
EL	ELEVATION
ELCSP	EPOXY LINED & COATED STEEL PIPE
ELEC	ELECTRIC (AL)
ELL	ELBOW
EMBED	EMBEDMENT
EMER	EMERGENCY
EMH	ELECTRICAL MANHOLE
EP	EDGE OF PAVEMENT
EQUIP	EQUIPMENT
EW	EACH WAY
EWEF	EACH WAY EACH FACE
EX	EXTRA
EXH	EXHAUST
EXIST	EXISTING
EXP	EXPOSED EXPANSION
EXT	EXTERIOR
F:	
FA	FRESH AIR
FAB	FABRICATE (D) (TION)
FAI	FRESH AIR INTAKE
FB	FLAT BAR OR FLOOR BEAM
FC	FLEXIBLE COUPLING
FCA	FLANGED COUPLING ADAPTER
FCO	FLOOR CLEANOUT
FCR	FINE CRUSHED ROCK
FD	FLOOR DRAIN
FDR	FEEDER
FE	FLOW ELEMENT (METER)
FG	FINISH GRADE OR FLAP GATE
FGP	FIBERGLASS PIPE
F/G	FIBERGLASS
FH	FIRE HYDRANT
FHD	FLATHEAD
FIN	FINISH (ED)
FL	FLOOR
FLEX	FLEXIBLE
FLG	FLANGE (D)
FM	FORCE MAIN
FPC	FLEXIBLE PIPE COUPLING
FPC-T	FLEXIBLE PIPE COUPLING TO TAKE TENSION
FPM	FEET PER MINUTE
FPS	FEET PER SECOND
FRP or FRMP	FIBERGLASS REINFORCED MORTAR PIPE
FS	FAR SIDE
FT	FEET OR FOOT
FTG	FOOTING
FUT	FUTURE
FW	FLAT WASHER
G:	
GA	GAUGE
GAF	GALVANIZE AFTER FABRICATION
GALV	GALVANIZED
GBV or GLV	GLOBE VALVE
GD	GUARD
GEN	GENERAL
GC	GROOVED COUPLING
GL	GLASS
GLCIP	GLASS LINED CAST IRON PIPE
GPD	GALLONS PER DAY
GPM	GALLONS PER MINUTE
GR	GRADE
GRD	GROUND
GRDR	GRINDER
GS	GALVANIZED STEEL
GSKT	GASKET
GSP	GALVANIZED STEEL PIPE
GV	GATE VALVE
GV & B	GATE VALVE & VALVE BOX
GWB	GYPSUM WALL BOARD
H:	
H/A	HAND AUTOMATIC
HC	HOLLOW CORE
HD	HEAVY DUTY
HDOT	HEAVY DUTY OIL TIGHT
HDR	HEADER
HGLV	HOSE GLOBE VALVE
HGR	HANGER
HGV	HOSE GATE VALVE
HM	HOLLOW METAL
HN	HEX NUT
HOA	HAND-OFF-AUTOMATIC
HOR or HORIZ	HORIZONTAL
HP	HORSEPOWER, HIGH PRESSURE
HR	HANDRAIL, HOUR, HEAT RESERVOIR
HS	HIGH STRENGTH, HEAVY STREET
HTR	HEATER
H/V	HEATING & VENTILATING
HV	HOSE VALVES, HOSE BIBB, HEADER VALVE
HW	HIGH WATER, HOT WATER
HWD	HARDWOOD
HYD	HYDRAULIC OR HYDRANT
HZ	HERTZ (CYCLES PER SECOND)
I:	
ID	INSIDE DIAMETER
IE	INVERT ELEVATION
IF	INSIDE FACE
IL	INDICATING LAMP
IN	INCH
INF	INFLUENT
INS	INSULATED (ION)
INST	INSTANTANEOUS
INSTR	INSTRUMENT
INT	INTERIOR
INTLK	INTERLOCK
INV	INVERT
INV EL	INVERT ELEVATION
IP	IRON PIN
IT	INSTRUMENT TAP
J:	
JB	JUNCTION BOX
JCT	JUNCTION
JH	JOIST HANGER
JST	JOIST
JT	JOINT
K:	
KG	KNIFE GATE
KV	KILOVOLT
L:	
LAM	LAMINATED
LBS	POUNDS
LEV	LEVEL
LG	LONG
LF	LINEAL FEET
LI	LIFTING INSERT
LOS	LOCKOUT STOP
LP	LOW PRESSURE
LR	LONG RADIUS
LTG	LIGHTING
LV	LOW VOLTAGE, LINE VALVE
LVR	LOUVER
LWR	LOWER
M:	
M	MIRROR
MA	MILLIAMPERE
MAG	MAGNETIC
MAN	MANUAL
MAX	MAXIMUM
MBH	THOUSAND BTU'S PER HOUR
MCC	MOTOR CONTROL CENTER
MCM	THOUSAND CIRCULAR MILS
MECH	MECHANICAL
MET	METAL
MFR	MANUFACTURER
MGD	MILLION GALLONS PER DAY
MG/L	MILLIGRAMS PER LITER
MH	MANHOLE
MI	MALLEABLE IRON
MIN	MINIMUM, MINUTE
MISC	MISCELLANEOUS
MJ	MECHANICAL JOINT
MK	MARKED
ML	MILLILITER, MIXED LIQUOR
MO	MOTOR OPERATOR
MOD	MODEL
MOS	MOWING STRIP
MS	METAL STUDS
MT	METAL THRESHOLD
MTR	MOTOR
MU	MIRROR UNIT
MV	MUD VALVE, MILLIVOLTS
MWS	MAXIMUM WATER SURFACE
MX	AUXILIARY RELAY
N:	
N	NORTHING
NA	NON-AUTOMATIC
NC	NORMALLY CLOSED
NDOT	NEVADA DEPARTMENT OF TRANSPORTATION
NIC	NOT IN CONTRACT
NIS	NOT IN SERVICE
NG	NATURAL GAS
NO	NORMALLY OPEN, NUMBER
NP	NAMEPLATE
NPS	NON-PROJECTING STEM
NPSH	NET POSITIVE SUCTION HEAD
NRS	NON-RISING STEM
NTS	NOT TO SCALE
NV	NEEDLE VALVE
NWL	NORMAL WATER LEVEL
O:	
OA	OUTSIDE AIR
OB	OPPOSED BLADE
OC	ON CENTER
OD	OUTSIDE DIAMETER
OF	OUTSIDE FACE
OL	OVERLOAD
OPNG	OPENING
OPP	OPPOSITE
P:	
PB	PULL BOX
PBV	PLASTIC BALL VALVE
PC	POINT OF CURVATURE
PCHV	PINCH VALVE
PCMP	PERFORATED CORRUGATED METAL PIPE
PCV	PLASTIC CHECK VALVE
PG	PRESSURE GAUGE
PH	PHASE
PI	POINT OF INTERSECTION
PK	PEAK
PL	PLATE, PIPELINE, PROPERTY LINE
PLAC	PLASTIC LINED ASBESTOS CEMENT
PLAS	PLASTIC
PLCS	PLACES
PMF	PREMOLDED FILLER
PMS	PLANT MIX SURFACING
PNEU	PNEUMATIC
PNL	PANEL, PANELBOARD
PP	POWER POLE
PRCCP	PRETRESSED CONCRETE CYLINDER PIPE
PREFAB	PREFABRICATED
PRESS	PRESSURE
PRFV	PRESSURE RELIEF VALVE
PRI	PRIMARY
PRV	PRESSURE REGULATION (REDUCING) VALVE
PS	PRESSURE SWITCH, PIPE SUPPORT
PSF	POUNDS PER SQUARE FOOT
PSIA	POUNDS PER SQUARE INCH ABSOLUTE
PSIG	POUNDS PER SQUARE INCH GAUGE
PSL	PIPE SLEEVE
PT	POINT OF TANGENT
PV	PLUG VALVE
PVC	POLYVINYL CHLORIDE PIPE
PVT or PVMT	PAVEMENT
PWD	PLYWOOD
Q:	
QCPLG	QUICK COUPLING
R:	
R	RADIUS, RISER, RUN, CONTRACTOR
RA	RETURN AIR
RB	RED BRASS
RBO	(TO BE) REMOVED BY OTHERS
R/C	REINFORCED CONCRETE
RCDR	RECORDER
RCP	REINFORCED CONCRETE PIPE
RD	ROOF DRAIN, RED BRASS PIPE
RECIR	RECIRCULATE
RECP	RECEPTACLE
RED	REDUCER
REG	REGULATE
REHAB	REHABILITATE
REINF	REINFORCE (ED) (ING)
REM	REMOVE (ABLE)
REQ'D	REQUIRED
RE-STL	REINFORCING STEEL
REV	REVISE (ED) (IONS)
RGS	RIGID GALVANIZED STEEL
RM	ROOM
RPM	REVOLUTIONS PER MINUTE, REINFORCED PLASTIC MORTAR PIPE
RR	RAILROAD
R & R	REMOVE & RELOCATE (REINSTALL)
R & S	REMOVE & SAVE
RV	RELIEF VALVE
R/W	RIGHT-OF-WAY
R & W	REMOVE & WASTE
RWD	REDWOOD
RWL	RAIN WATER LEADER
RWP	RAIN WATER PIPE
RX	AUXILIARY RELAY TO R
S:	
S	START CONTACTOR
SA	SUPPLY AIR, SERVICE AIR
SCH	SCHEDULE
SCV	SPLIT CHECK VALVE
SD	SOAP DISPENSER
SE	SEWER EASEMENT
SECT	SECTION
SEL	SELECTOR
SG	SLUICE GATE
SH	SHEET
SIM	SIMILAR
SL	SLOPE
SLS	SARAN LINED STEEL
SO_2	SULFUR DIOXIDE
SP	STATIC PRESSURE, STOP, STRUCTURAL PLYWOOD
S & P	SHELF & POLE
SD	SPLITTER DAMPER
SPEC	SPECIFICATIONS
SQ	SQUARE
SR	SHORT RADIUS
SS	STAINLESS STEEL
S & S	STUB & STOPPER
SSK	SERVICE SINK
SSP	STAINLESS STEEL PIPE
SSPWC	STANDARD SPECIFICATIONS FOR PUBLIC WORKS CONSTRUCTION
ST	START
STA	STATION
STD	STANDARD, STORM DRAIN
STL	STEEL
STOR	STORAGE
STR	STRONG, STRAINER
STRUCT	STRUCTURAL
STSTL	STAINLESS STEEL
SUPP	SUPPORT
SURF	SURFACE
SV	SOLENOID VALVE
SW	SWITCH
SWBD	SWITCHBOARD
SWD	SIDE WATER DEPTH
SX	AUXILIARY RELAY TO S
SYM	SYMMETRICAL
T:	
T & B	TOP AND BOTTOM
TC	TIME CLOSING CONTACT
TD	TANK DRAIN, TOWEL DISPENSER
TDH	TOTAL DYNAMIC HEAD
TE	TOTALLY ENCLOSED
TEMP	TEMPERATURE, TEMPORARY
T & G	TONGUE & GROOVE
TH	THERMOMETER
THY	THYRITE PROTECTOR
TM	TIME METER-HOURS
TO	TOP OF
TOB	TOP OF BERM
TOC	TOP OF CURB/CONCRETE
TOD	TOP OF DRAIN
TOW	TOP OF WALL
TPH	TOILET PAPER HOLDER
TPI	TEST POWER INTERLOCK
TPU	TIME PICK UP
TR	STAIR TREAD, TIMING RELAY
TRAN	TRANSFORMER
TS	STRUCTURAL TUBE
TV	THERMOSTATIC VALVE
TYP	TYPICAL
U:	
UC	UNDER CONSTRUCTION
UG	UNDERGROUND
UN	UNION
U/P	UTILITY POLE
UNO	UNLESS NOTED OTHERWISE
V:	
V	VALVE, VENTS, VOLTS
VAC	VACUUM, VOLTS ALTERNATE CURRENT
VAR	VARIES (IABLE)
VAT	VINYL ASBESTOS TILE
VB	VALVE BOX, VACUUM BREAKER
VCP	VITRIFIED CLAY PIPE
VDC	VOLTS DIRECT CURRENT
VERT	VERTICAL
VG	VACUUM GAUGE
VIC CPLG	VICTAULIC COUPLING
VSW	VACUUM SWITCH
VT	VINYL TILE
VTR	VENT THROUGH ROOF
W:	
W	WATTS
W/	WITH
WC	WATER CLOSET, WATER COLUMN
WCO	WALL CLEANOUT
WD	WOOD
WG	WASTE GAS
WH	WATER HEATER
WI	WROUGHT IRON
W/O	WITHOUT
WP	WATER OR WEATHER PROOF
WPJ	WEAKENED PLANE JOINT
WS	WATER SURFACE, WELDED STEEL
WSP	WELDED STEEL PIPE
WSTP	WATERSTOP
WT	WATERTIGHT
WWF	WELDED WIRE FABRIC
WWTP	WASTE WATER TREATMENT PLANT
Y:	
YCO	YARD CLEANOUT

VERIFY SCALES
BAR IS ONE INCH ON ORIGINAL DRAWING
0 1"
IF NOT ONE INCH ON THIS SHEET, ADJUST SCALES ACCORDINGLY

DESIGNED	DRAWN	CHECKED	DATE
CE	OB	CHK	APRIL 2013

carollo®

STATE OF NEVADA — PROFESSIONAL ENGINEER — JOSE C. MACHADO JR. — Exp: 12-31-13 — CIVIL — No. 18792

REV.	DATE	DESCRIPTION	BY	APP'D

CARSON CITY PUBLIC WORKS
DIGESTER REHABILITATION PROJECT – PHASE I
CARSON CITY CIP NO. 5.1301

GENERAL

ABBREVIATIONS

DRAWING NO.
G-03

SHEET NO.
3 OF 20

CIVIL LEGEND

- NEW STRUCTURES
- EXISTING STRUCTURES
- NEW PIPING (TRIPLE LINES)
- NEW PIPING (SINGLE LINE)
- EXISTING PIPING (TRIPLE LINES)
- EXISTING PIPING (SINGLE LINE)
- HIDDEN LINE
- CENTER, MONUMENT, OR SURVEY LINE
- GUARDRAIL
- EXISTING CONTOURS — 1675
- NEW CONTOURS — 1675
- NEW CONTOURS BY OTHERS — 1675
- NEW FENCE — X — X — X
- EXISTING FENCE — X — X — X
- NEW POWER POLE & LINE — E — PP — E
- EXISTING POWER POLE & LINE — E — PP — E
- PROPERTY LINE OR RIGHT OF WAY
- NEW SLOPE — TOP / TOE
- EXISTING SLOPE — TOP / TOE
- FUTURE CONSTRUCTION
- EXISTING ROAD
- CURB & GUTTER — OR
- REMOVAL
- ABANDON IN PLACE
- SHORING
- GRADE BREAK — GB
- RIDGE LINE — R — R — R
- FLOW DIRECTION
- FLOW LINE
- NEW LIGHT POLE
- EXISTING LIGHT POLE
- NEW POWER POLE
- EXISTING POWER POLE
- SAVE TREE OR SHRUB — S
- BENCH MARK
- FIRE HYDRANT
- TREES AND BRUSH
- GUARD POST
- TRAFFIC SIGNS — B — B-B
- CATCH BASIN
- DRAINAGE INLET
- DRAINAGE HEADWALL
- ELECTRICAL MANHOLE AND PULL BOX

CIVIL LEGEND (CONT)

- MANHOLE
- DRYWELL
- SLOPE CALLOUT — 2:1 = 2/1; 3:1 = 3/1
- ROADWAY CROSS-SLOPE — 2.00% (FT/FT)
- ROADWAY GRADE — S=0.0100 (FT/FT)
- DRAINAGE DITCH OR CHANNEL GRADE — S=0.0020 (FT/FT)
- STATE PLANE COORDINATES — N 711289.78, E 1432605.38
- NEW SPOT ELEVATION — 1325.46
- EXISTING SPOT ELEVATION — 1328.2
- ELEVATION — 1325.00
- INVERT ELEVATION — INV 1320.0
- CENTERLINE ELEVATION — ℄ 1315.0
- ROADWAY CURVES (SEE TABLE ON EACH GRADING & PAVING SHEET WITH ROADWAY CURVES.)

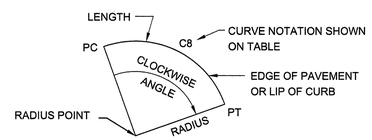

DRAWING CROSS REFERENCE

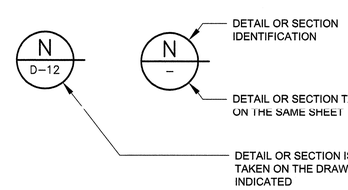

AT TITLE

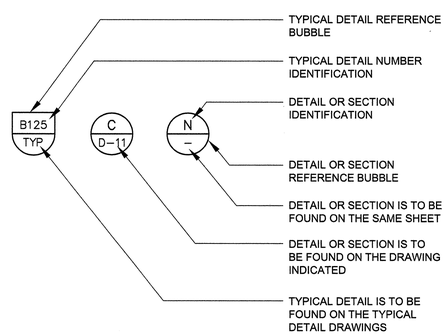

AT CROSS REFERENCE

BUILDING MATERIALS LEGEND

VIEW IN SECTION

MATERIAL	EXISTING	REMOVE	NEW	TEMPORARY
CLASS "A", "B", AND "D" CONCRETE				
CLASS "C" CONCRETE				
STEEL				
CAST IRON OR FIBERGLASS				
ALUMINUM				
BRICK OR BLOCK				
WOOD CROSS GRAIN, FINISH				
WOOD, STRUCTURAL				
BRONZE, BRASS, OR COPPER				
STRUCTURAL FILL				
RUBBER				
SOIL				
ASPHALTIC CONCRETE PAVEMENT				
RIP RAP				
TYPE II AGGREGATE BASE ROADWAY OR WALK				
CONCRETE PAVEMENT				

VERIFY SCALES
BAR IS ONE INCH ON ORIGINAL DRAWING
0 1"
IF NOT ONE INCH ON THIS SHEET, ADJUST SCALES ACCORDINGLY

DESIGNED CE
DRAWN OB
CHECKED CHK
DATE APRIL 2013

carollo

STATE OF NEVADA — PROFESSIONAL ENGINEER — JAMES C. MACLAGAN JR. — No. 19792 — Exp. 12-31-13

REV.	DATE	DESCRIPTION	BY	APP'D

CARSON CITY PUBLIC WORKS
DIGESTER REHABILITATION PROJECT – PHASE I
CARSON CITY CIP NO. 5.1301
GENERAL

LEGENDS AND SYMBOLS

DRAWING NO. G-04

SHEET NO. 4 OF 20

GENERAL NOTES:

1. PROTECT ADJACENT STRUCTURES.
2. PROTECT INTERIOR GAS MIXING PIPING DURING DEMOLITION AND NEW CONSTRUCTION.

KEY NOTES:

1. REMOVE AS PART OF DEMOLITION.
2. REMOVE PORTIONS OF CMU VENEER THAT ARE LOOSE, DAMAGED, OR DETERIORATED. BUDGET QUANTITY UP TO 100 CMU.

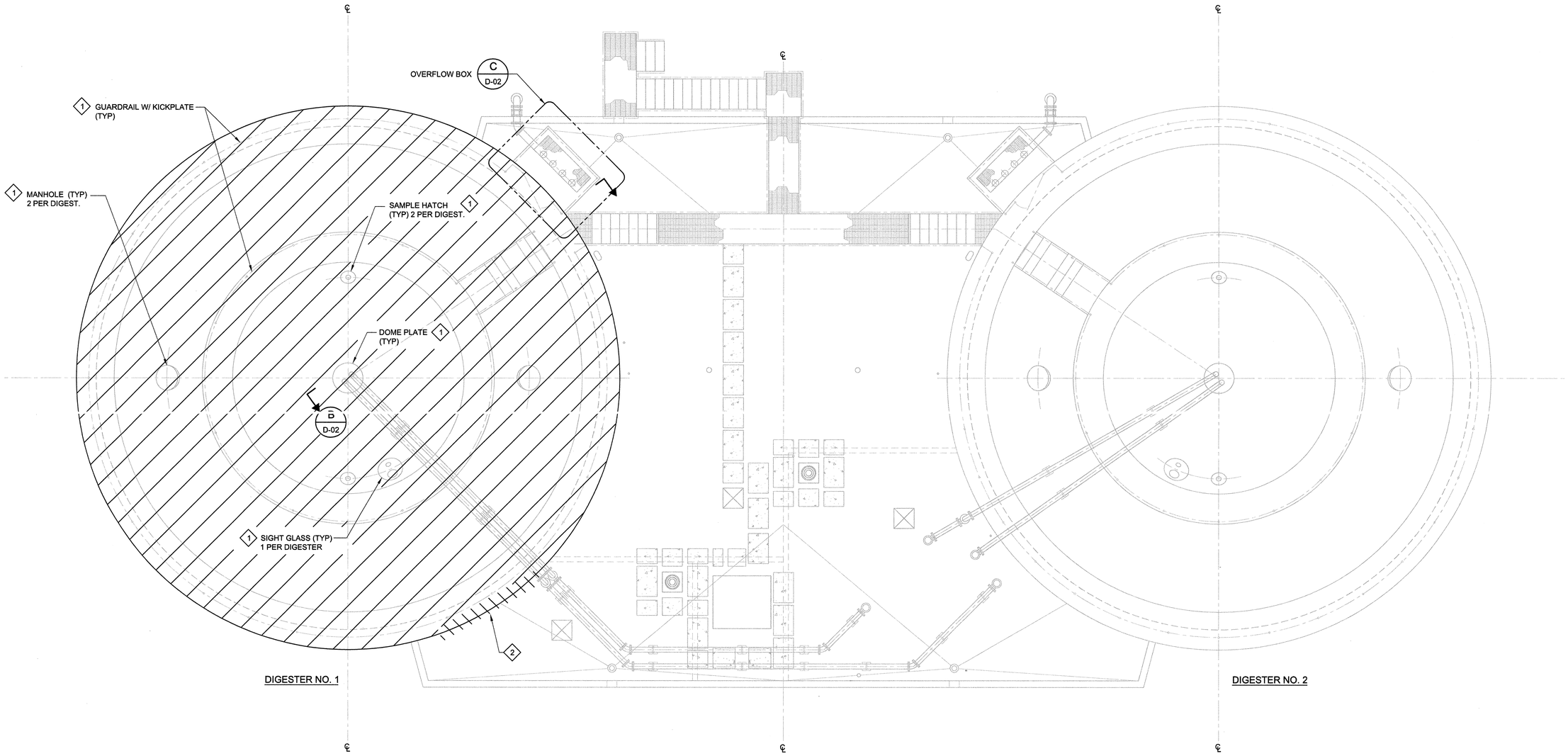

A OVERALL ROOF PLAN

SCALE: 3/16" = 1'-00"
FILE: 9072A.10_D-9101.dwg

NORTH

VERIFY SCALES
BAR IS ONE INCH ON ORIGINAL DRAWING
0 1"
IF NOT ONE INCH ON THIS SHEET, ADJUST SCALES ACCORDINGLY

DESIGNED	DAG
DRAWN	OB
CHECKED	CHK
DATE	APRIL 2013

carollo

STATE OF NEVADA
DAVID A. GEBLER
Exp: 06-30-13
STRUCTURAL
No. 20483
PROFESSIONAL ENGINEER

REV.	DATE	DESCRIPTION	BY	APP'D

CARSON CITY PUBLIC WORKS
DIGESTER REHABILITATION PROJECT – PHASE I
CARSON CITY CIP NO. 5.1301
DEMOLITION

DIGESTER
OVERALL ROOF PLAN

DRAWING NO.
D-01

SHEET NO.
5 OF 20

LAST SAVED BY: aferrer Model: Layout1 ColorTable: gshade.ctb DesignScript: Carollo_Std_Pen_v0905.pen PlotScale: 1:1 User: AFerrer Plot Date: 22-APR-2013 9:20:03 AM
PROJECT NO. 9072A10 FILE NAME: 9072A10_D-01.dwg

GENERAL NOTES:

1. PROTECT ADJACENT STRUCTURES.
2. FINISHED GRADE ELEVATION = 4625.00.

KEY NOTES:

1. PROTECT EXISTING WATERSTOP AND DOWELS.
2. REMOVE DAMAGED CMU VENEER, AND PORTIONS REQUIRED TO REMOVE AND RECONSTRUCT DOME.
3. REMOVE AS PART OF DEMOLITION
4. PREPARE DAMAGED SURFACES OF DIGESTER INTERIOR WALL PER SPECIFICATION SECTION 03_01_04.
5. AFTER DIGESTER WALL SURFACES ARE CLEANED BY CONTRACTOR, ENGINEER WILL INSPECT WALLS FOR DAMAGES AND GIVE DIRECTION TO CONTRACTOR FOR REPAIR OF DAMAGED AREAS. PAYMENT FOR REPAIR OF DAMAGED AREAS WILL BE NEGOTIATED CHANGE ORDER WITH PAYMENT COMING FROM THE ALLOWANCE BP.4.

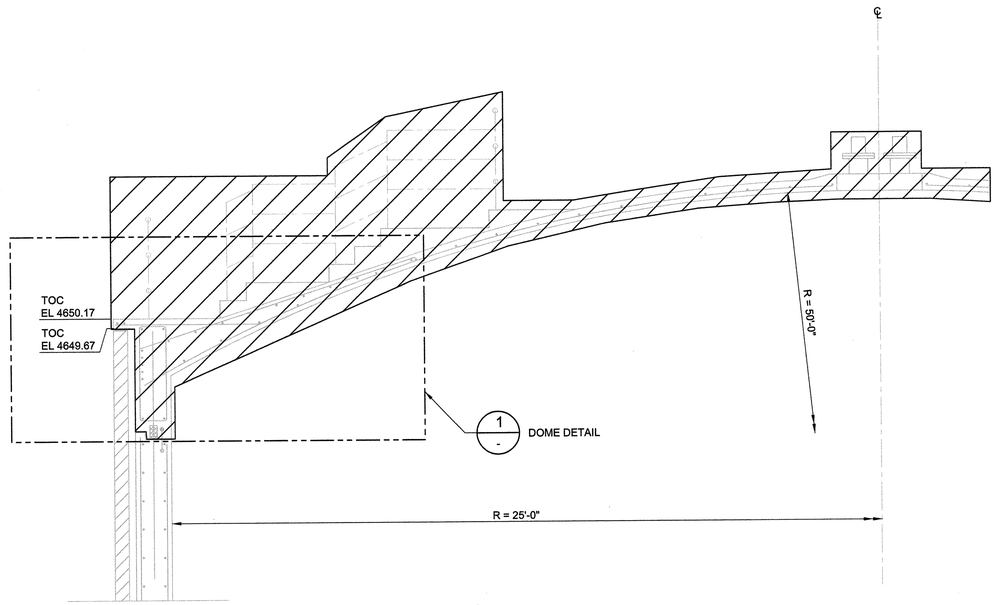

B / D-01 SECTION - DIGESTER NO.1
SCALE: 3/8" = 1'-0"
FILE: 9072A.10_D-9301.dwg

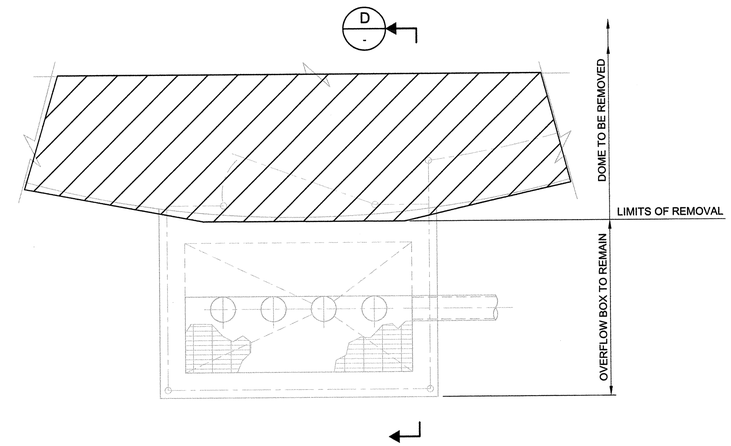

C / D-01 OVERFLOW BOX - PARTIAL PLAN
SCALE: 1/2" = 1'-0"
FILE: 9072A.10_D-9301.dwg

NORTH

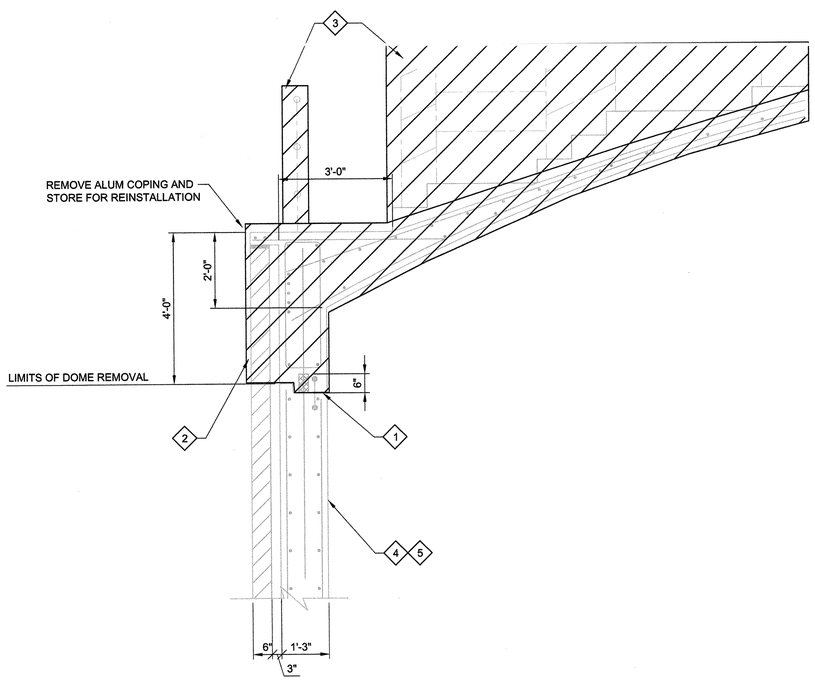

1 / - DOME DETAIL
SCALE: 1/2" = 1'-0"
FILE: 9072A.10_D-9301.dwg

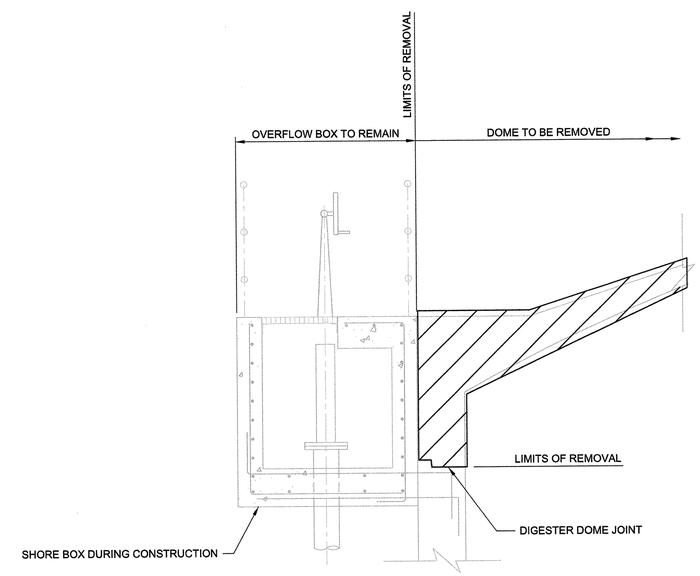

D / - OVERFLOW BOX - SECTION
SCALE: 1/2" = 1'-0"
FILE: 9072A.10_D-9301.dwg

VERIFY SCALES
BAR IS ONE INCH ON ORIGINAL DRAWING
0 1"
IF NOT ONE INCH ON THIS SHEET, ADJUST SCALES ACCORDINGLY

DESIGNED	DAG
DRAWN	OB
CHECKED	CHK
DATE	APRIL 2013

carollo

STATE OF NEVADA
DAVID A. GESLER
Exp: 06-30-13
STRUCTURAL
No. 20459
PROFESSIONAL ENGINEER
4/24/13

REV.	DATE	DESCRIPTION	BY	APP'D

CARSON CITY PUBLIC WORKS
DIGESTER REHABILITATION PROJECT – PHASE I
CARSON CITY CIP NO. 5.1301
DEMOLITION
DIGESTER
PARTIAL PLAN AND SECTIONS

DRAWING NO.
D-02

SHEET NO.
6 OF 20

Plot Date: 22-APR-2013 9:20:22 AM
User: AFerrer
Model: Layout1 ColorTable: gshade.ctb DesignScript: Carollo_Std_Pen_v0905.pen PlotScale: 1:1
LAST SAVED BY: aferrer

PROJECT NO. 9072A10 FILE NAME: 9072A10_D-02.dwg

GENERAL :

1. THE CONTRACTOR SHALL VERIFY ALL DIMENSIONS BEFORE STARTING WORK AND SHALL IMMEDIATELY NOTIFY THE ENGINEER OF ANY DISCREPANCIES.

2. UNLESS DETAILED, SPECIFIED, OR INDICATED OTHERWISE, CONSTRUCTION SHALL BE AS INDICATED IN THE APPLICABLE TYPICAL DETAILS AND GENERAL NOTES. TYPICAL DETAILS ARE MEANT TO APPLY EVEN THOUGH NOT REFERENCED AT SPECIFIC LOCATIONS ON DRAWINGS.

3. WHERE NO CONSTRUCTION DETAILS ARE SHOWN OR NOTED FOR ANY PART OF WORK, DETAILS SHALL BE THE SAME AS FOR OTHER SIMILAR WORK.

4. VERIFY LOCATION & SIZE OF OPENINGS AT ROOF, FLOORS, AND WALLS WITH ARCHITECTURAL, MECHANICAL, AND ELECTRICAL PLANS AND AS REQUIRED FOR EQUIPMENT FURNISHED.
   FOR ADDITIONAL OPENINGS AT ROOF, FLOORS AND WALLS SEE ARCHITECTURAL, MECHANICAL AND ELECTRICAL DRAWINGS.
   SEE SPECS AND MFR'S DATA FOR THIMBLES AND OTHER EMBEDDED ITEMS AROUND SLUICE GATE AND SLIDE GATE OPENINGS.

5. CODES:
   2006 INTERNATIONAL BUILDING CODE WITH 2007 NORTHERN NEVADA AMENDMENTS
   REINFORCED CONCRETE: AMERICAN CONCRETE INSTITUTE ACI 318-05
   ENVIRONMENTAL ENGINEERING CONCRETE STRUCTURES ACI 350-01

6. LOADING CRITERIA:
   MINIMUM LOADING REQUIREMENTS PER CHAPTER 16 OF THE IBC-2006.

   DEAD LOAD . . . . . CALCULATED

   LIVE LOADS . . . . . SEE PLANS

   WIND LOAD:
   BASIC WIND SPEED . . . . . 100 MPH (ASCE 7)
   EXPOSURE C
   IMPORTANCE FACTOR 1.15

   SEISMIC LOAD:
   SITE CLASSIFICATION . . . . . D
   S_{DS} = 1.0 g
   S_{D1} = 0.6 g
   SEISMIC DESIGN CATEGORY . . . . . E
   IMPORTANCE FACTOR 1.25
   GROUND SNOW LOAD. . . . . 30 PSF

7. CONSTRUCTION LOADS:
   STRUCTURES HAVE BEEN DESIGNED FOR OPERATIONAL LOADS ON COMPLETED STRUCTURES. DURING CONSTRUCTION, STRUCTURES SHALL BE PROTECTED BY BRACING AND BALANCING WHEREVER EXCESSIVE LOADS MAY OCCUR.

8. INSERTS AND SLEEVES FOR PIPES, GATES, ETC. AND EMBEDDED ITEMS SUCH AS CONDUITS ARE SHOWN IN MECHANICAL AND ELECTRICAL DRAWINGS.

9. WHERE LIFTING LUGS ARE CALLED FOR ON THE PLANS, CONTRACTOR SHALL PROVIDE A DETAIL AND CALCULATIONS FOR A REMOVABLE EYE, FOR REVIEW AND APPROVAL BY THE ENGINEER. REMOVABLE EYE SHALL BE TURNED OVER TO THE OWNER AFTER INSTALLATION OF MOVABLE PANELS.

CONCRETE :

1. ALL CONCRETE STRENGTH SHALL BE 4,500 PSI MINIMUM AT 28 DAYS UNO.

2. LOCATION OF CONSTRUCTION JOINTS SHALL BE APPROVED BY THE ENGINEER. DOME SHALL BE POURED MONOLITHICALLY.

3. PROVIDE 3/4 INCH CHAMFERS AT ALL EXPOSED EDGES.

4. FOR ADDITIONAL CONCRETE NOTES SEE S101/TYP

REINFORCING STEEL :

1. REINFORCING STEEL SHALL BE DEFORMED BARS CONFORMING TO ASTM SPECIFICATION A615 GRADE 60 OR A706 GRADE 60.

2. PROVIDE SPACER BARS, SPREADERS, CHAIRS, BLOCKS, ETC., AS REQUIRED TO SECURELY HOLD STEEL IN PLACE.

3. MAINTAIN 3 INCHES MINIMUM CLEARANCE BETWEEN REINFORCING STEEL AND PIPELINES UNLESS OTHERWISE NOTED.

4. ALL REINFORCING STEEL SHALL BE LAP SPLICED PER S101/TYP ALL BARS SHALL BE DEVELOPED BEYOND POINT OF TERMINATION, AS SHOWN ON DRAWINGS. IF DEVELOPMENT LENGTH IS NOT SHOWN, WHETHER HOOKED OR STRAIGHT, DEVELOPMENT LENGTH SHALL BE PER ACI 318-05.

5. PROVIDE ADDITIONAL REINF AT OPENINGS AS PER S180/TYP.

STEEL AND STAINLESS STEEL :

1. ALL MATERIAL AND WORK SHALL CONFORM TO THE AISC SPECIFICATION, LATEST EDITION, FOR THE DESIGN, FABRICATION AND ERECTION OF STRUCTURAL STEEL FOR BUILDINGS.

2. STRUCTURAL STEEL SHALL CONFORM TO ASTM A992 GRDAE 50.

3. STRUCTURAL PIPE MEMBERS SHALL CONFORM TO ASTM A53, GRADE B.

4. STRUCTURAL TUBE MEMBERS SHALL CONFORM TO ASTM A-500, GRADE B, FY=46 KSI.

5. STRUCTURAL STAINLESS STEEL SHALL CONFORM TO ASTM A276 FOR BARS AND SHAPES, TYPE 304L OR 316L. ALL CONNECTORS ETC.

6. EACH CONNECTION SHALL HAVE A MINIMUM OF TWO BOLTS.

7. BOLT SPACING SHALL BE 3 INCHES, UNLESS NOTED OTHERWISE.

8. MINIMUM EDGE DISTANCE (DISTANCE FROM CENTER OF BOLT TO NEAREST EDGE OF PLATE OR STRUCTURAL ELEMENT) SHALL BE 1 1/2 INCHES FOR 3/4 INCH DIAMETER BOLTS UNLESS NOTED OTHERWISE.

9. ANCHOR BOLTS SHALL BE PER ASTM A307, UNO.

10. ALL BOLTED STAINLESS STEEL CONNECTIONS SHALL CONSIST OF STAINLESS STEEL BOLTS, NUTS, AND WASHERS.

HOT-DIP GALVANIZING

1. ALL GALVANIZING SHALL BE PERFORMED AFTER FABRICATION.

2. EXCEPT AS OTHERWISE SPECIFIED HEREIN, HOT-DIP GALVANIZING SHALL CONFORM TO THE REQUIREMENTS OF ASTM STANDARD A 123-78 WITH AN AVERAGE WEIGHT PER SQUARE FOOT OF 2 OUNCES AND NOT LESS THAN 1.8 OUNCES PER SQUARE FOOT.

3. AREAS OF GALVANIZING DAMAGED BY WELDING OR BURNING, OR OTHERWISE DAMAGED, SHALL BE REPAIRED AND RECOATED.

WELDING STEEL :

1. WELDING SHALL BE DONE BY ELECTRIC SHIELDED ARC PROCESS USING E-70XX ELECTRODES.

2. ALL WELDING SHALL BE PERFORMED BY CERTIFIED WELDERS.

3. ALL WELDS SHALL BE MADE IN CONFORMANCE WITH THE LATEST EDITION OF THE STRUCTURAL WELDING CODE AWS A5.1 AND AWS D1.1 OF THE AMERICAN WELDING SOCIETY.

4. ALL FILLET WELDS SHALL BE A MINIMUM 3/16 INCH, IF NOT CALLED OUT.

ALUMINUM :

1. ALUMINUM CONSTRUCTION SHALL CONFORM TO THE LATEST EDITION OF THE ALUMINUM MANUAL OF THE ALUMINUM ASSOCIATION.

2. UNLESS OTHERWISE NOTED, STRUCTURAL ALUMINUM SHALL BE ALLOY 6061-T6 AS SPECIFIED IN ASTM B211 OR ASTM B221 FOR BARS, AND ASTM B308 FOR STRUCTURAL SHAPES.

3. WHERE ALUMINUM IS IN CONTACT WITH MASONRY OR CONCRETE SURFACES, CONTACT SURFACES SHALL BE COATED WITH HEAVY ALKALI-RESISTANT BITUMINOUS PAINT PER SPECIFICATIONS.

4. EACH BOLTED CONNECTION SHALL HAVE MINIMUM OF TWO BOLTS.

5. BOLT SPACING SHALL BE 3 INCHES, UNO.

WELDING ALUMINUM :

1. WELDING ALUMINUM SHALL BE IN CONFORMANCE WITH AWS D1.2-90

2. WELDING SHALL BE DONE BY USING ER4043 ELECTRODES.

3. ALL WELDING SHALL BE CONTINUOUS AND SHALL BE 3/16" FILLET WELDS, UNO.

WELDING STAINLESS STEEL :

1. WELDING SHALL BE DONE BY USING E308L-15 ELECTRODES FOR ASTM304L AND E316L-15 ELECTRODES FOR ASTM316L.

2. SEE NOTE 4 UNDER WELDING STEEL.

3. WELD PER AWS B2.1 OR D10.4 AS APPLICABLE.

CONCRETE MASONRY UNIT :

1. CONCRETE MASONRY UNITS SHALL COMPLY WITH THE REQUIREMENTS OF ASTM C90, GRADE N-1 WITH MINIMUM COMPRESSIVE STRENGTH OF 1900 PSI, AND SHALL BE NORMAL WEIGHT TYPE. USE OPEN END BLOCK ONLY EXCEPT AT CORNERS.

2. BLOCK PATTERN, TEXTURE, COLOR AND PLACEMENT SHALL MATCH EXISTING.

3. CORNER BOND BEAM, PILASTER, U-BLOCKS, AND ACCESSORY UNITS OF THE SAME COLOR AND TEXTURE SHALL BE PROVIDED.

4. REINFORCEMENT FOR MASONRY SHALL BE SECURED IN PLACE IN CONFORMANCE WITH THE DRAWINGS AND APPLICABLE REQUIREMENTS OF THE 2006 IBC.

5. GROUTING: ALL CELLS SHALL BE SOLID GROUTED.

6. MIN LAP FOR ALL REINF. BARS SHALL BE 62 BAR DIAMETERS; ALL JAMB SPLICES SHALL BE 72 BAR DIAMETERS.

7. VERTICAL REINF. FOR WALLS SHALL BE CONTINUOUS FROM FLOOR TO ROOF WITHOUT SPLICE, USE OPEN END BLOCK AT VERTICAL REINF. BARS.

8. OWNER SHALL PROVIDE CONTINUOUS INSPECTION BY A REGISTERED DEPUTY INSPECTOR AS REQUIRED FOR MASONRY CONSTRUCTION IN ACCORDANCE WITH 2006 IBC, CHAPTER 17.

9. ALL MASONRY SHALL CONFORM TO: S430/TYP S440/TYP

ADDITIONAL ABBREVIATIONS :

H1E	HOOK ONE END	R/W	REINFORCE WITH
H2E	HOOK TWO ENDS	TOS	TOP OF STEEL
ICC	INTERNATIONAL CODE COUNCIL	TOG	TOP OF GRATING

SPECIAL INSPECTION :

SPECIAL INSPECTION OF THE FOLLOWING ITEMS SHALL BE IN ACCORDANCE WITH IBC-2006 CHAPTER 17.

A. CONCRETE:
- PLACING OF REINFORCING STEEL.
- PLACING OF ANCHOR BOLTS OR EMBEDDED PLATES.
- INSTALLATION OF MECHANICAL COUPLERS.
- INSTALLATION OF EXPANSION ANCHORS AND ADHESIVE ANCHORS WHERE REQUIRED BY THE RESPECTIVE ICC EVALUATION REPORT.

B. WELDING:
- ALL STRUCTURAL STEEL.
- HEADED STUDS FOR EMBEDDED PLATES.

C. HIGH STRENGTH BOLTING.

D. MASONRY CONSTRUCTION.

ARCH/STRUCT HATCH PATTERNS :

DEMO/CMU

GRATING

CONCRETE

VERIFY SCALES
BAR IS ONE INCH ON ORIGINAL DRAWING
0 — 1"
IF NOT ONE INCH ON THIS SHEET, ADJUST SCALES ACCORDINGLY

DESIGNED	DAG
DRAWN	OB
CHECKED	CHK
DATE	APRIL 2013

carollo

STATE OF NEVADA
DAVID A. GEISLER
Exp: 06-30-13
STRUCTURAL
No. 20489
PROFESSIONAL ENGINEER

REV.	DATE	DESCRIPTION	BY	APP'D

CARSON CITY PUBLIC WORKS
DIGESTER REHABILITATION PROJECT – PHASE I
CARSON CITY CIP NO. 5.1301
STRUCTURAL

STRUCTURAL NOTES

DRAWING NO.
S-01

SHEET NO.
7 OF 20

LAST SAVED BY: aferrer Model: Layout1 ColorTable: gshade.ctb DesignScript: Carollo_Std_Pen_v0905.pen PlotScale: 1:1 User: AFerrer Plot Date: 22-APR-2013 9:20:41 AM

GENERAL NOTES:

1. FORMWORK SHALL BE REMOVED AS EASILY AND UNIFORMLY AS POSSIBLE. GREAT CARE SHALL BE TAKEN TO AVOID DANGEROUS LOADING CONDITION WHEN THE FORMWORK IS BEING REMOVED.
2. DIGESTER DOME SHALL BE WATER CURED.
3. RECONSTRUCT DAMAGED CMU WALL.
4. ALL PENETRATIONS IN DOME SHALL CONFORM TO TYP DTL S180/TYP UNO. COORDINATE WITH MECHANICAL DRAWINGS.
5. DOME FORMWORK SHALL NOT BE ROMOVED BEFORE POSTENSIONING IS COMPLETED.
6. DESIGN LOADS:
   VACUUM = 12 INCHES WATER COLUMN
   GAS PRESSURE = 48 INCHES WATER COLUMN
   LIVE LOAD = 40 PSF
7. TOTAL TENDON PRESTRESS FORCE = 114,000 LBS SEE SPEC. SECTION 03_38_21.
8. (P) POST TENSION BUILDOUT LOCATION. EXACT LOCATION PER POST TENSION CONTRACTOR. SEE 1/S-04
9. COORDINATE LOCATED OF RAOAR LEVEL TRANSMITTER WITH ELECTRICAL DRAWINGS.

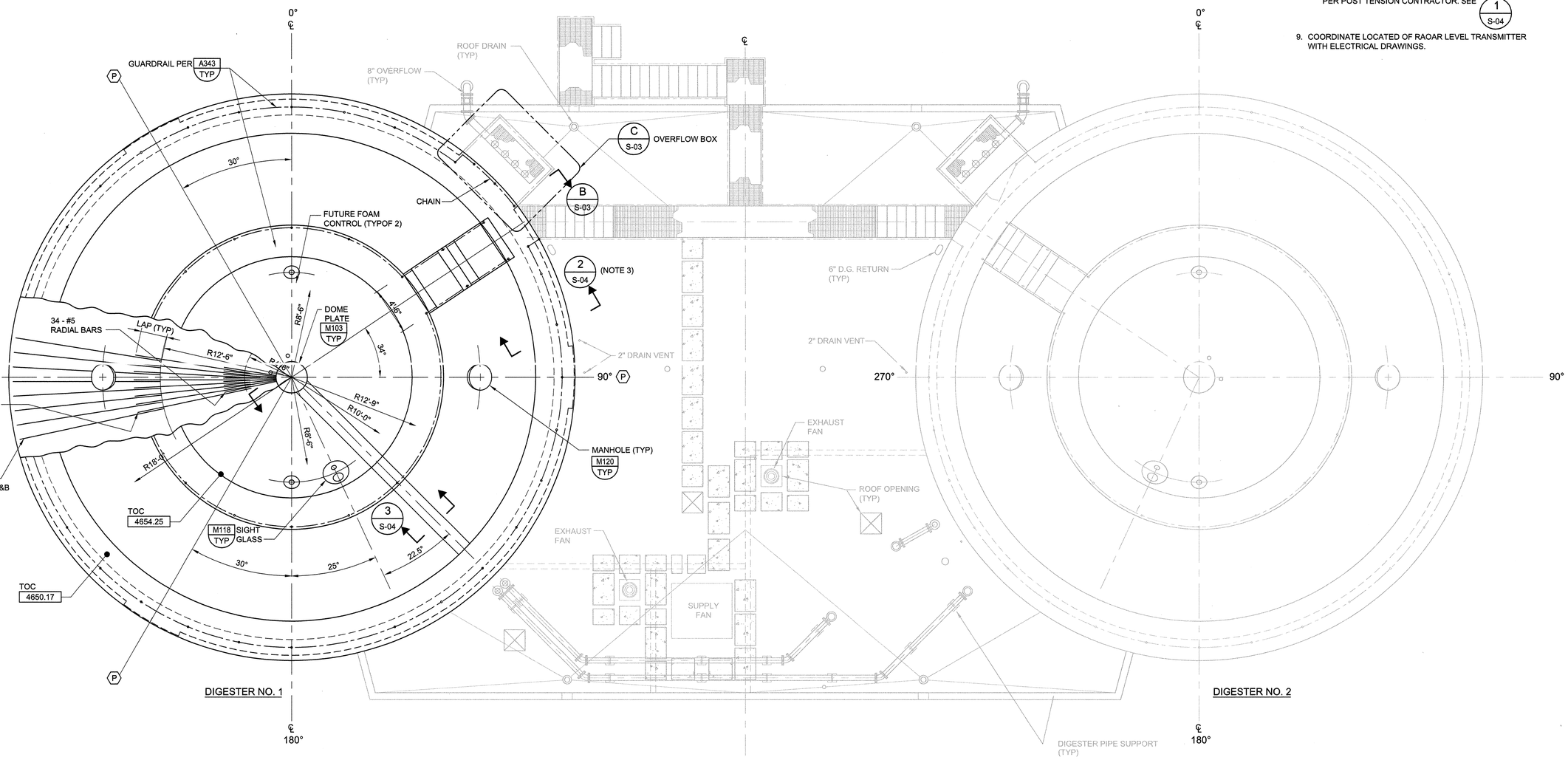

A OVERALL ROOF PLAN

SCALE: 3/16" = 1'-00"
FILE: 9072A.10_S-9101.dwg

NORTH

VERIFY SCALES
BAR IS ONE INCH ON ORIGINAL DRAWING
0 1"
IF NOT ONE INCH ON THIS SHEET, ADJUST SCALES ACCORDINGLY

DESIGNED	DRAWN	CHECKED	DATE
DAG	OB	CHK	APRIL 2013

carollo

STATE OF NEVADA
DAVID A. GEISLER
Exp: 06-30-13
STRUCTURAL
PROFESSIONAL ENGINEER
No. 20459

REV.	DATE	DESCRIPTION	BY	APP'D

CARSON CITY PUBLIC WORKS
DIGESTER REHABILITATION PROJECT – PHASE I
CARSON CITY CIP NO. 5.1301
STRUCTURAL

DIGESTER
OVERALL ROOF PLAN

DRAWING NO.
S-02

SHEET NO.
8 OF 20

PROJECT NO. 9072A10 FILE NAME: 9072A10_S-02.dwg

LAST SAVED BY: aferrer Model: Layout1 ColorTable: gshade.ctb DesignScript: Carollo_Std_Pen_v0905.pen PlotScale: 0.083333:1 User: AFerrer Plot Date: 24-APR-2013 10:19:01 AM

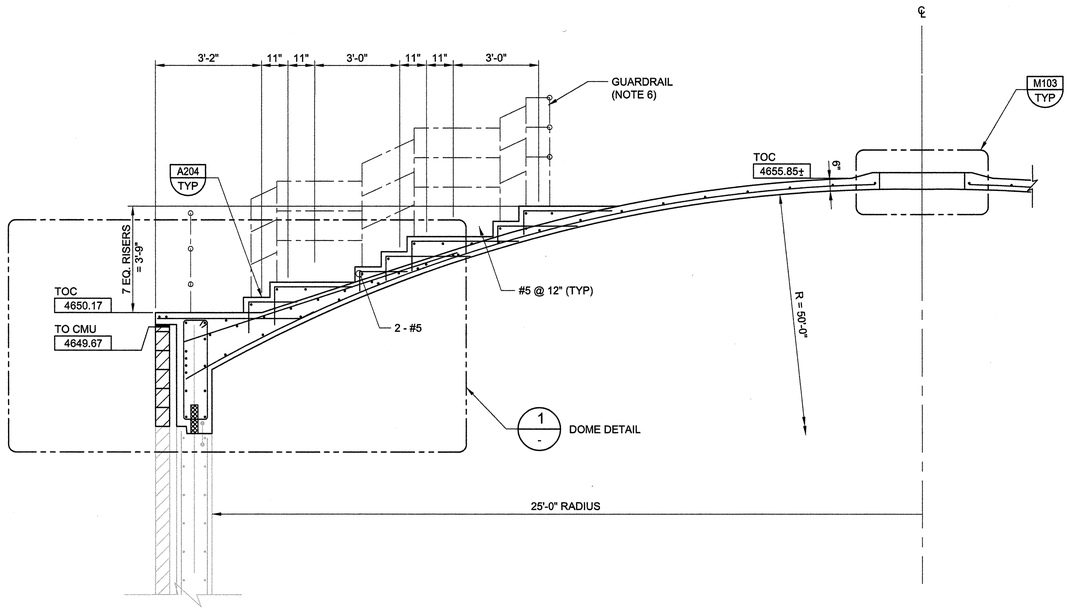

B S-02 SECTION - DIGESTER NO.1
SCALE: 3/8" = 1'-0"
FILE: 9072A.10_S-9301.dwg

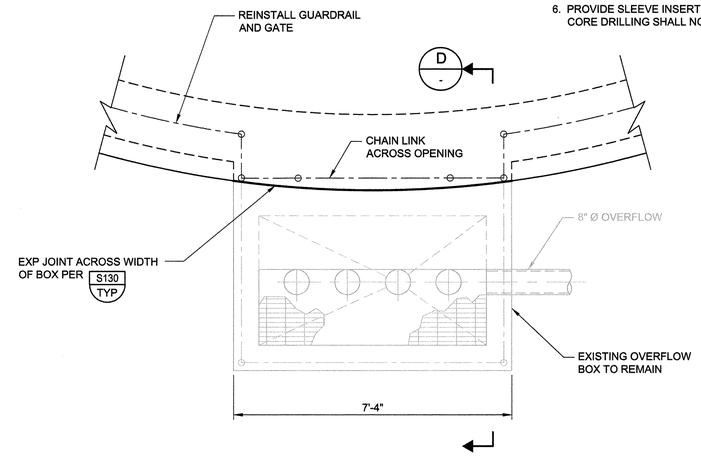

C S-02 OVERFLOW BOX - PARTIAL PLAN
SCALE: 1/2" = 1'-0"
FILE: 9072A.10_S-9301.dwg

NORTH

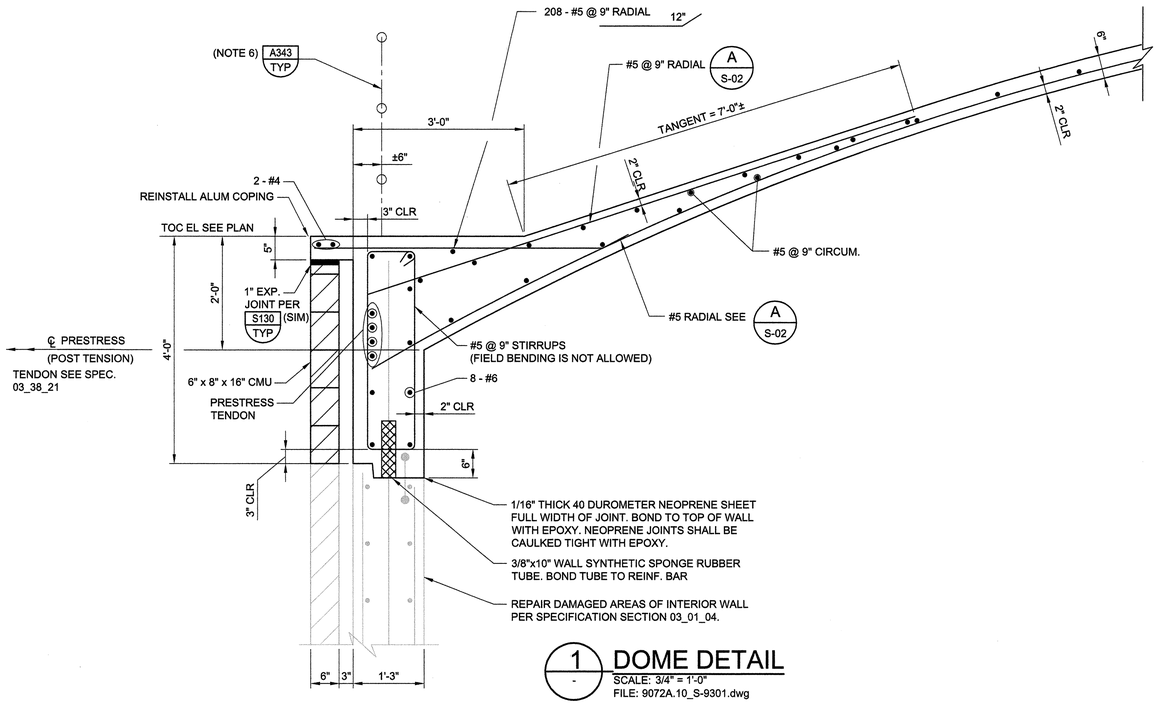

1 - DOME DETAIL
SCALE: 3/4" = 1'-0"
FILE: 9072A.10_S-9301.dwg

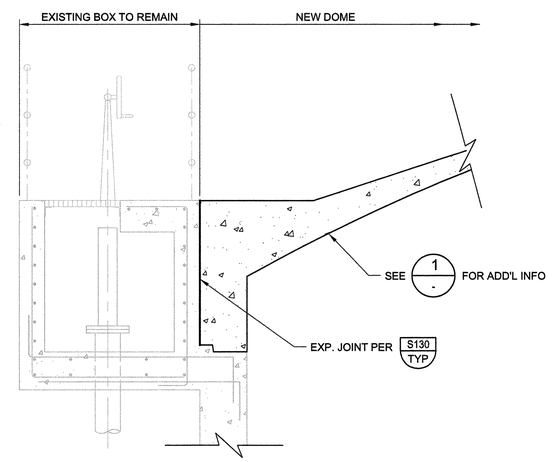

D - OVERFLOW BOX - SECTION
SCALE: 1/2" = 1'-0"
FILE: 9072A.10_S-9301.dwg

GENERAL NOTES:

1. DIGESTER DOME SHALL BE GAS TIGHT.
2. PLACE CONCRETE FOR DOME MONOLITHICALLY WITH NO CONSTRUCTION JOINTS.
3. PLACE CONCRETE FOR DOME STARTING AT THE BOTTOM AND WORKING TOWARDS THE TOP.
4. ADJACENT LAP SPLICES FOR DOME SHELL AND TENSION/ COMPRESSION RING BEAM CIRCUMFERENTIAL BARS SHALL BE STAGGERED HORIZONTALLY BY NOT LESS THAN ONE LAP LENGTH NOR 3 FEET FROM CENTER OF LAP BELOW TO ADJACENT CENTER OF LAP ABOVE, AND SHALL NOT COINCIDE IN VERTICAL ARRAYS MORE FREQUENTLY THAN EVERY THIRD BAR.
5. ADJUST #5 STIRRUPS TO CLEAR THE GUADRAIL SLEEVES.
6. PROVIDE SLEEVE INSERTS AT POSTS. CORE DRILLING SHALL NOT BE USED.

VERIFY SCALES
BAR IS ONE INCH ON ORIGINAL DRAWING
0 1"
IF NOT ONE INCH ON THIS SHEET, ADJUST SCALES ACCORDINGLY

DESIGNED DAG
DRAWN OB
CHECKED CHK
DATE APRIL 2013

carollo

PROFESSIONAL ENGINEER STATE OF NEVADA
DAVID A. GEISLER
Exp: 06-30-13
STRUCTURAL
No. 20450
4/24/13

REV.	DATE	DESCRIPTION	BY	APP'D

CARSON CITY PUBLIC WORKS
DIGESTER REHABILITATION PROJECT – PHASE I
CARSON CITY CIP NO. 5.1301
STRUCTURAL
DIGESTER
PARTIAL PLAN AND SECTIONS

DRAWING NO. S-03
SHEET NO. 9 OF 20

Plot Date: 22-APR-2013 9:21:22 AM
User: AFerrer
Model: Layout1 ColorTable: gshade.ctb DesignScript: Carollo_Std_Pen_v0905.pen PlotScale: 1
LAST SAVED BY: aferrer

PROJECT NO. 9072A10 FILE NAME: 9072A10_S-03.dwg

Plot Date: 22-APR-2013 9:21:40 AM
User: AFerrer
Model: Layout1 ColorTable: gshade.ctb DesignScript: Carollo_Std_Pen_v0905.pen PlotScale: 1:1
LAST SAVED BY: aferrer

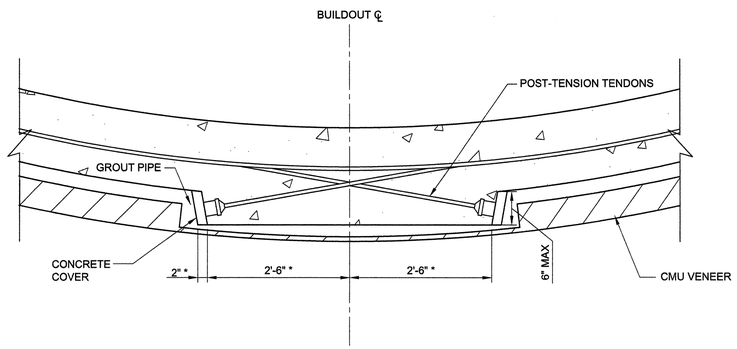

1 / S-02 **BUILDOUT DETAIL**
SCALE: 3/4" = 1'-0"
FILE: 9072A.10_S-9301.dwg

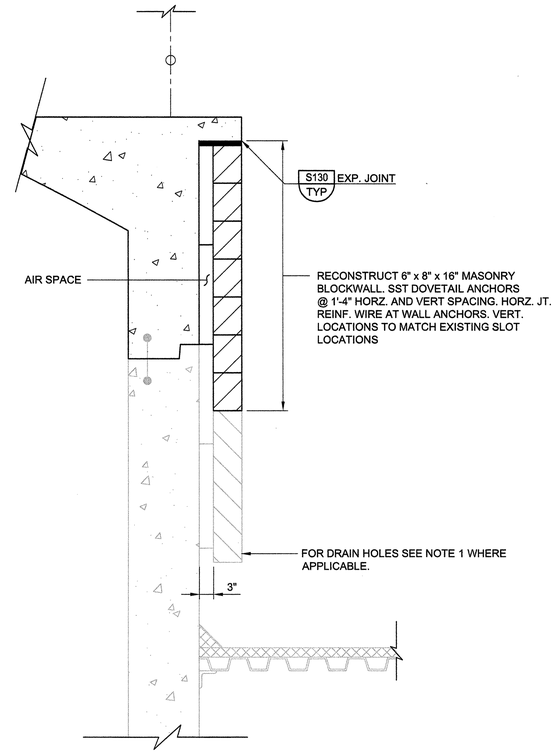

2 / S-02 **DETAIL**
SCALE: 3/4" = 1'-0"
FILE: 9072A.10_S-9301.dwg

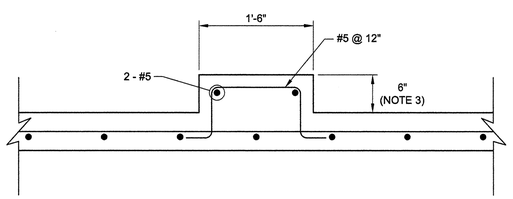

3 / S-02 **DETAIL**
SCALE: 1" = 1'-0"
FILE: 9072A.10_S-9301.dwg

GENERAL NOTES:

1. OMIT MORTAR AT EVERY 6TH VERTICAL JOINT ON BOTTOM COURSE OF DIGESTER. CMU VENEER WALL ONLY FOR DRAINAGE.
2. * ACTUAL DIMENSIONS BY POST TENSION CONTRACTOR.
3. INCREASE AT SEDIMENT TRAP. COORDINATE WITH EQUIPMENT SUPPLIED.

VERIFY SCALES
BAR IS ONE INCH ON ORIGINAL DRAWING
0 1"
IF NOT ONE INCH ON THIS SHEET, ADJUST SCALES ACCORDINGLY

DESIGNED	DAG
DRAWN	OB
CHECKED	CHK
DATE	APRIL 2013

carollo

STATE OF NEVADA
REGISTERED PROFESSIONAL ENGINEER
DAVID A. GESLER
Exp: 06-30-13
STRUCTURAL
No. 20469

REV.	DATE	DESCRIPTION	BY	APP'D

CARSON CITY PUBLIC WORKS
DIGESTER REHABILITATION PROJECT – PHASE I
CARSON CITY CIP NO. 5.1301
STRUCTURAL

DIGESTER DETAILS

DRAWING NO.
S-04

SHEET NO.
10 OF 20

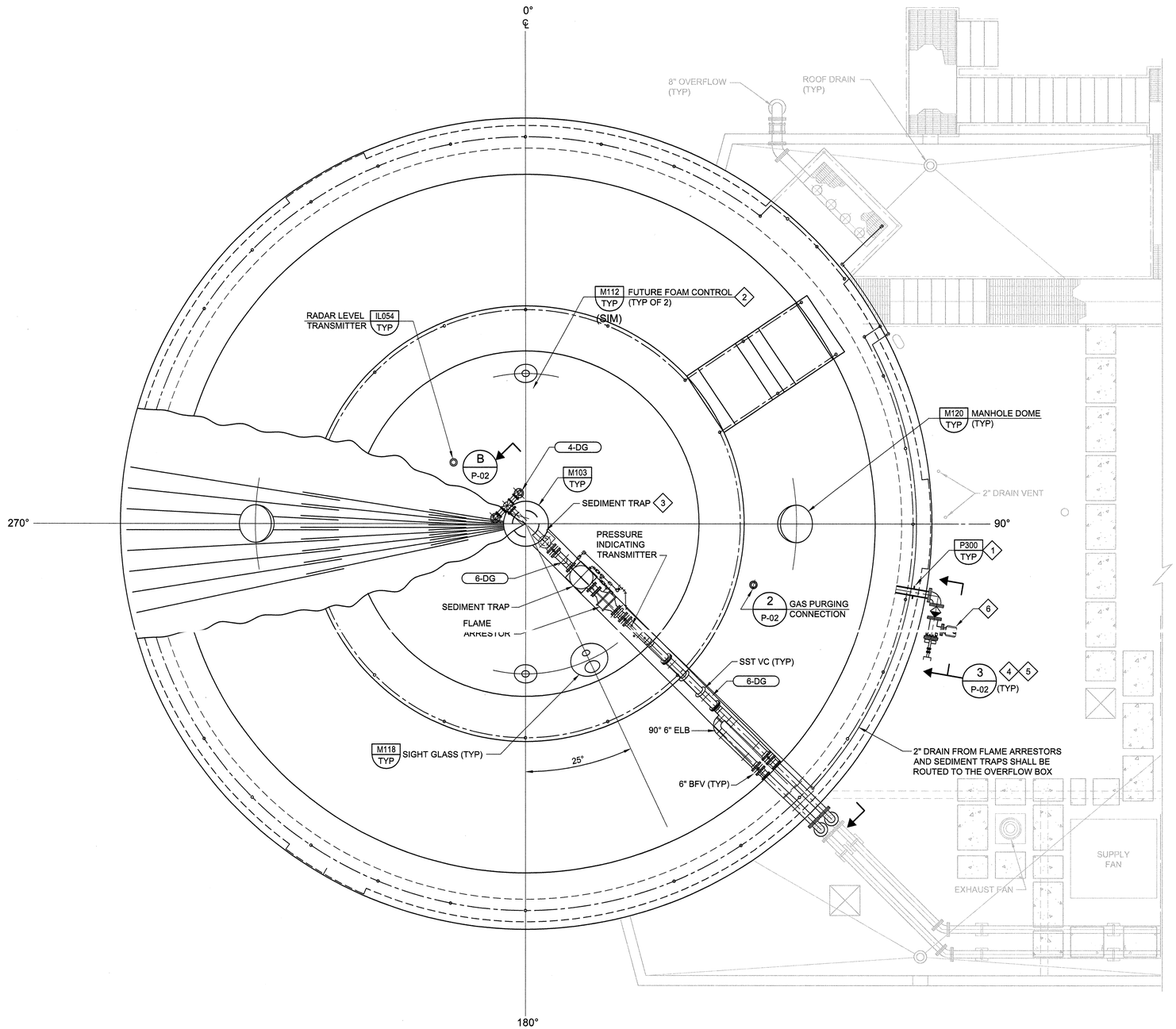

DIGESTER NO. 1

A OVERALL PLAN

SCALE: 1/4" = 1'-0"
FILE: 9072A.10_M-101.dwg

NORTH

GENERAL NOTES:

1. SEE DETAIL 2 / P-02
2. UNLESS OTHERWISE INDICATED, REFER TO INDIVIDUAL PRESSURE GAUGE SWITCH, AND TRANSMITTER SPECIFICATIONS FOR INSTALLATION DETAILS AND REQUIREMENTS FOR ALL PRESSURE INSTRUMENTS.

KEY NOTES:

1. SHOWN LOCATION OF PIPE PENETRATION IS APPROXIMATE. CONFER WITH OPERATIONS STAFF FOR ACTUAL LOCATION
2. PROVIDE 6" PIPE SCH40 SST PIPE THRU THE NEW DOME ROOF FOR FUTURE CONNECTION. ROOF PENETRATION SIMILAR TO TYPICAL DETAIL M112 TYP DO NOT PROVIDE PVC PIPE EXTENSION AND SUPPORTS. PROVIDE 316L SST BLIND FLANGES ON BOTH ENDS OF THE PIPE.
3. SUPPORT 2-D FROM SEDIMENT TRAP OF 6-DG PER P601 TYP
4. INSTALL DIFFERENTIAL PRESSURE LEVEL MONITORING IN THE DIGESTER CONTROL BUILDING PER MANUFACTURER'S INSTRUCTIONS. PROVIDE 1" PIPE WITH BALL VALVE FROM EXISTING DG PIPE TO THE PRESSURE TRANSMITTER.
5. INSTALL PRESSURE INSTRUMENT INSIDE THE DIGESTER CONTROL BUILDING, ABOUT 3' ABOVE EXISTING GRADE.
6. COORDINATE WITH OPERATIONS STAFF FOR EXACT LOCATION OF PRESSURE TRANSMITTER

VERIFY SCALES
BAR IS ONE INCH ON ORIGINAL DRAWING
0 1"
IF NOT ONE INCH ON THIS SHEET, ADJUST SCALES ACCORDINGLY

DESIGNED	DRAWN	CHECKED	DATE
RD	OB	CHK	APRIL 2013

carollo

STATE OF NEVADA PROFESSIONAL ENGINEER
MANUEL C. LOPEZ Jr.
Exp. 12-31-13
No. 18792

REV.	DATE	DESCRIPTION	BY	APP'D

CARSON CITY PUBLIC WORKS
DIGESTER REHABILITATION PROJECT – PHASE I
CARSON CITY CIP NO. 5.1301
PROCESS

DIGESTER TOP PLAN

DRAWING NO. P-01

SHEET NO. 11 OF 20

Model: Layout1 ColorTable: gshade.ctb DesignScript: Carollo_Std_Pen_v0905.pen PlotScale: 1
LAST SAVED BY: aferrer User: AFerrer Plot Date: 24-APR-2013 3:38:04 PM

PROJECT NO. 9072A10 FILE NAME: 9072A10_M-01.dwg

KEY NOTES:

1. DIGESTER GAS PIPING SUPPORTS SHALL BE LOCATED OVER THICKENED DOME SECTION. REFER TO DWG T-03 FOR DETAILS.
2. INSULATE ALL FLAME ARRESTERS AND DRAIN PIPES ON TOP OF THE DIGESTERS PER SPECIFICATIONS.
3. INSTALL PER SPECIFICATIONS AND MANUFACTURER'S REQUIREMENTS.
4. COORDINATE LOCATION OF PIT WITH PLANT STAFF PRIOR TO INSTALLATION.
5. TIE IN TO EXISTING PIPE AT THE ROOF LEVEL.

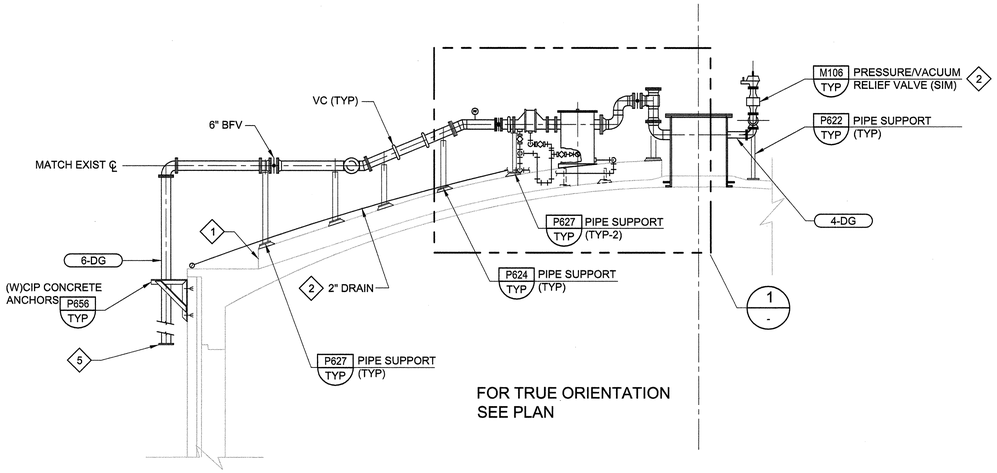

B M-01 SECTION
SCALE: 1/4" = 1'-0"
FILE: 9072A.10_M-301.dwg

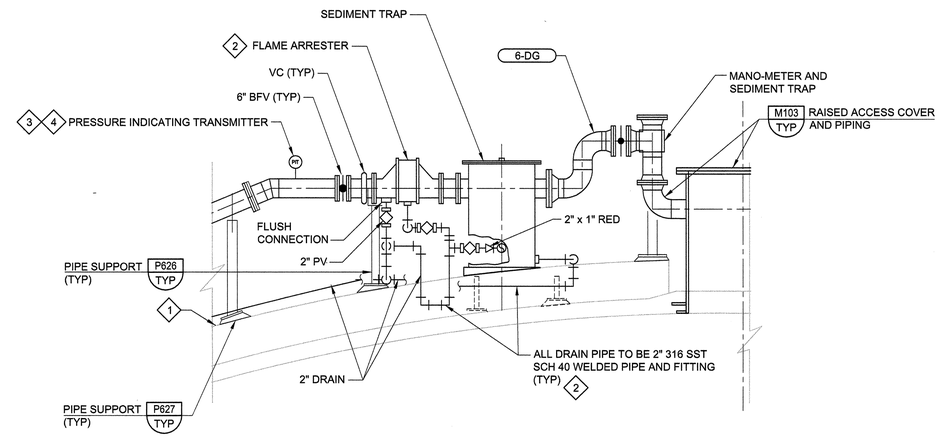

1 - DETAIL
SCALE: 1/2" = 1'-0"
FILE: 9072A.10_M-301.dwg

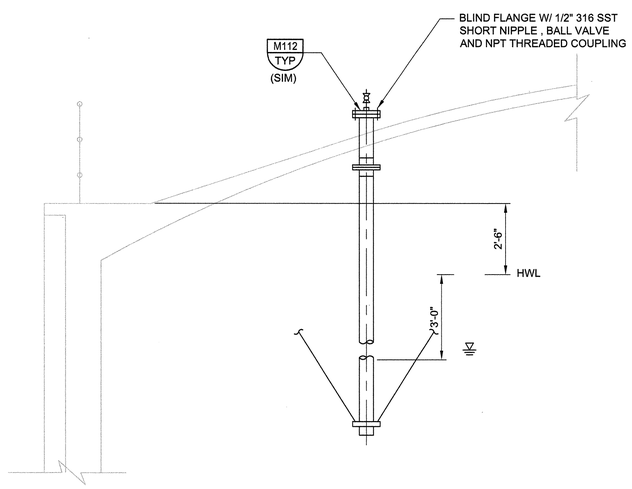

2 M-01 GAS PURGING CONNECTION DETAIL
SCALE: 3/8" = 1'-0"
FILE: 9072A.10_M-301.dwg

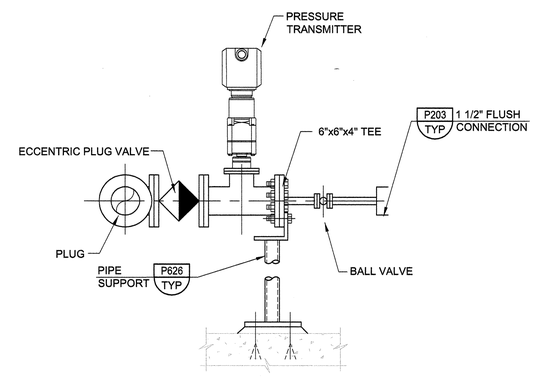

3 M-01 DIGESTER LEVEL MOUNTING DETAIL
SCALE: NTS
FILE: 9072A.10_M-301.dwg

VERIFY SCALES
BAR IS ONE INCH ON ORIGINAL DRAWING
0 1"
IF NOT ONE INCH ON THIS SHEET, ADJUST SCALES ACCORDINGLY

DESIGNED	DRAWN	CHECKED	DATE
RD	OB	CHK	APRIL 2013

carollo

PROFESSIONAL ENGINEER - STATE OF NEVADA
JOSE C. MACHADO, JR.
Exp. 12-31-13
CIVIL
No. 18792

REV.	DATE	DESCRIPTION	BY	APP'D

CARSON CITY PUBLIC WORKS
DIGESTER REHABILITATION PROJECT – PHASE I
CARSON CITY CIP NO. 5.1301

PROCESS

DIGESTER
SECTION AND DETAILS

DRAWING NO.
P-02

SHEET NO.
12 OF 20

Plot Date: 22-APR-2013 9:22:19 AM
User: AFerrer
Model: Layout1 ColorTable: gshade.ctb DesignScript: Carollo_Std_Pen_v0905.pen PlotScale: 1:1
LAST SAVED BY: aferrer

PROJECT NO. 9072A10 FILE NAME: 9072A10_M-02.dwg

ELECTRICAL PLAN SYMBOLS

IDENTIFICATION SYMBOLS

■ EQUIPMENT/INSTRUMENT LOCATOR

a (X) b c — LUMINAIRE IDENTIFICATION
a = DEVICE SWITCHED FROM
b = CIRCUIT DESIGNATION
c = MOUNTING HEIGHT IN FEET TO BOTTOM OF FIXTURE

◇1 — INDICATES KEYNOTE 1 (PERTAINS ONLY TO SHEET WHERE NOTE IS FOUND)

LUMINAIRES

LUMINAIRE POLE MOUNTED

RACEWAY

EXPOSED CONDUIT

EXPOSED CONDUIT HIDDEN BEHIND WALLS, FLOORS OR OTHER STRUCTURES

CONDUIT VERTICAL CHANGE IN DIRECTION

(J) JUNCTION BOX

LUMINAIRE SCHEDULE

3/28/2013

ITEM	DESCRIPTION	MOUNTING METHOD	LAMP QUANTITY	LAMP TYPE	MANUFACTURER	CATALOG	VOLTS	VA
A	CROUSE-HINDS HAZARD-GARD EVLL SERIES, CLASS 1, DIVISION 1, GROUP D, FACTORY-SEALED LED LUMINAIRE, 5625 LUMEN OUTPUT, .99% PF, SHATTER-RESISTANT EXPLOSIONPROOF LENS, NEMA 4X, MARINE AND WET LOCATION RATED, COPPER-FREE ALUMINUM BODY, EXPOXY COATED.	STANCHION	ARRAY	LED	CROUSE-HINDS	EVLL5LCJ50/UNV	120	80

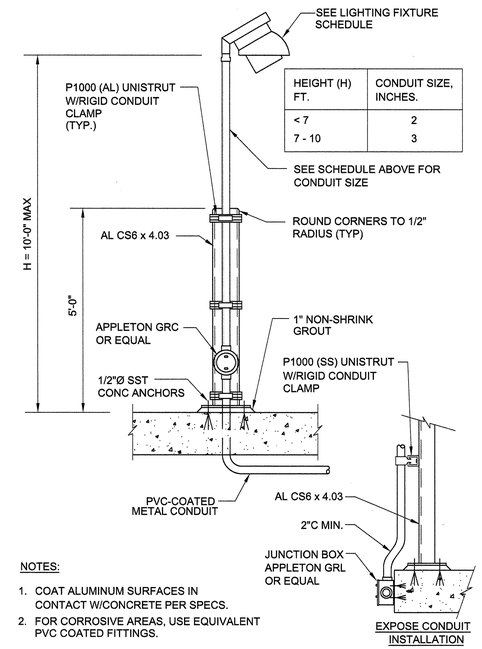

HEIGHT (H) FT.	CONDUIT SIZE, INCHES.
< 7	2
7 - 10	3

NOTES:

1. COAT ALUMINUM SURFACES IN CONTACT W/CONCRETE PER SPECS.
2. FOR CORROSIVE AREAS, USE EQUIVALENT PVC COATED FITTINGS.

A / E-02 R — LIGHT FIXTURE MOUNTING
CLASS 1, DIVISION 1 & 2 INSTALLATION

VERIFY SCALES
BAR IS ONE INCH ON ORIGINAL DRAWING
0 1"
IF NOT ONE INCH ON THIS SHEET, ADJUST SCALES ACCORDINGLY

DESIGNED JB
DRAWN VACP
CHECKED JB
DATE APRIL 2013

carollo

STATE OF NEVADA — JOHN R. JACOBS — Exp. 06-30-14 — ELECTRICAL — No. 12210 — PROFESSIONAL ENGINEER
4/26/13

REV.	DATE	DESCRIPTION	BY	APP'D

CARSON CITY PUBLIC WORKS
DIGESTER REHABILITATION PROJECT – PHASE I
CARSON CITY CIP NO. 5.1301
ELECTRICAL

LEGEND, SCHEDULE, DETAILS

DRAWING NO. E-01

SHEET NO. 13 OF 20

LAST SAVED BY: aferrer Model: Layout1 ColorTable: gshade.ctb DesignScript: Carollo_Std_Pen_v0905.pen PlotScale: 0.083333:1 User: AFerrer Plot Date: 22-APR-2013 9:22:36 AM

GENERAL NOTES:

1. NEW ELECTRICAL INSTALLATION SHALL COMPLY WITH A CLASS 1, DIVISION 1, GROUP D HAZARDOUS LOCATION IN ACCORDANCE WITH NEC ARTICLE 500 AND SPECIFICATION 26-05-00.
2. SUPPORT EXPOSED CONDUITS PER TYPICAL DETAIL EM101.

KEY NOTES:

1. ROUTE DOWN THE EXTERIOR DIGESTER WALL AND THROUGH ELECTRICAL ROOM CEILING PER TYPICAL DETAIL P504. TERMINATE RACEWAY TO EXISTING PHOTOCELL BYPASS SWITCH IN ELECTRICAL ROOM, RECONNECTING CONDUCTORS TO EXISTING DIGESTER NO. 1 DOME LIGHT CIRCUIT CONTROLS. VERIFY LOCATION OF SWITCH WITH OWNER.
2. ROUTE THROUGH ELECTRICAL ROOM WALL. TERMINATE RACEWAY AT EXISTING PLC SYSTEM TERMINAL CABINET. COIL 5'-0" OF CABLE IN CABINET FOR FINAL TERMINATION BY OWNER. VERIFY LOCATION OF EXISTING CABINET WITH OWNER.
3. ROUTE RACEWAY BELOW EXISTING STAIRWAY.

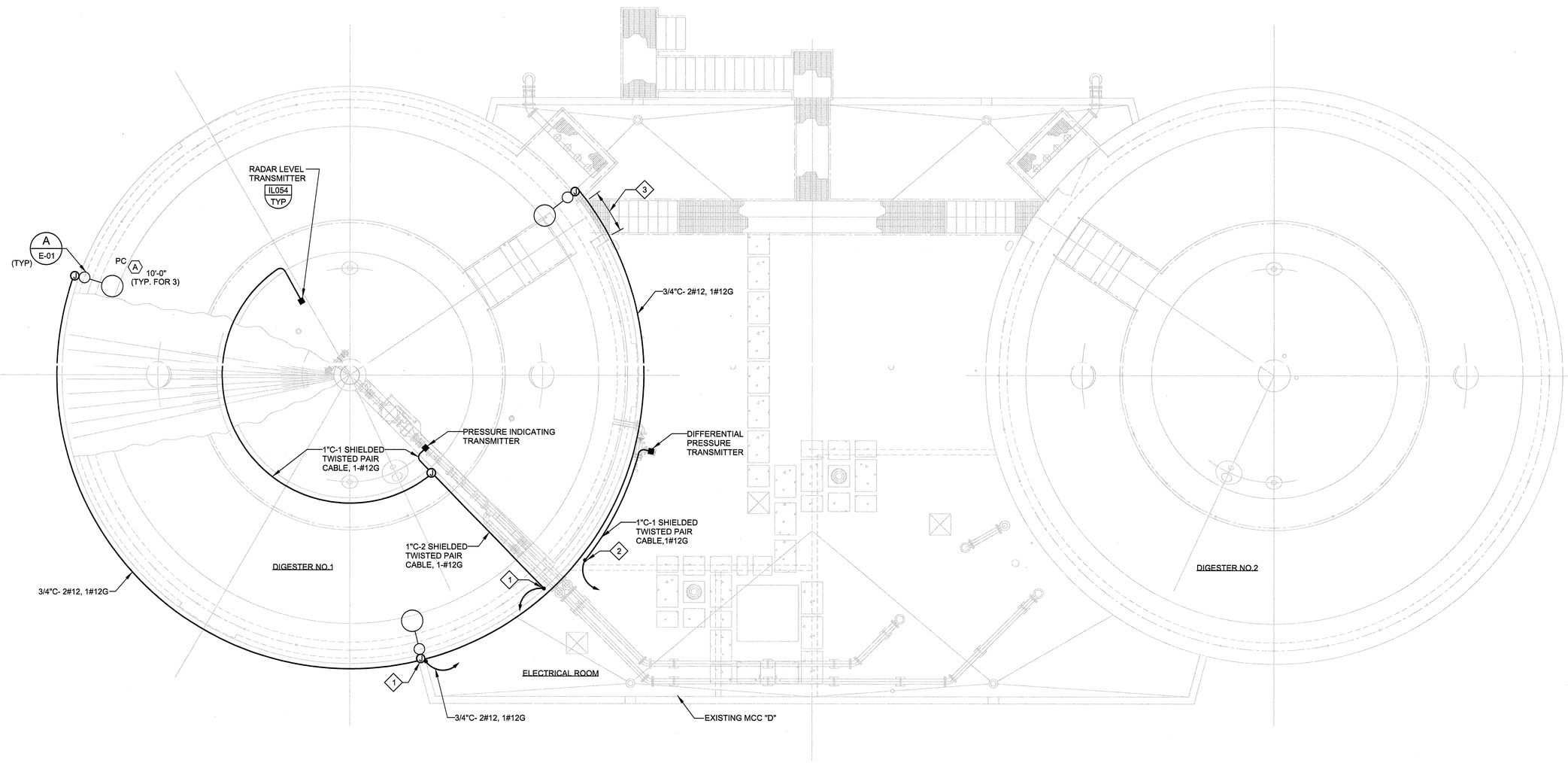

A OVERALL PLAN

SCALE: 3/16"=1'-0"
FILE: 9072A10-00-080-100.2dm

VERIFY SCALES
BAR IS ONE INCH ON ORIGINAL DRAWING
0 1"
IF NOT ONE INCH ON THIS SHEET, ADJUST SCALES ACCORDINGLY

DESIGNED	DRAWN	CHECKED	DATE
JB	VACP	JB	APRIL 2013

carollo

PROFESSIONAL ENGINEER STATE OF NEVADA
JOHN M. JACOBS
Exp: 09-30-14
ELECTRICAL
No. 12210
4/26/13

REV.	DATE	DESCRIPTION	BY	APP'D

CARSON CITY PUBLIC WORKS
DIGESTER REHABILITATION PROJECT – PHASE I
CARSON CITY CIP NO. 5.1301
ELECTRICAL
DIGESTER TOP PLAN

DRAWING NO.
E-02

SHEET NO.
14 OF 20

LAST SAVED BY: aferrer Model: Layout1 ColorTable: gshade.ctb DesignScript: Carollo_Std_Pen_v0905.pen PlotScale: 0.083333:1 User: AFerrer Plot Date: 24-APR-2013 9:14:35 AM

PROJECT NO. 9072A10 FILE NAME: 9072A10-E-02.dgn

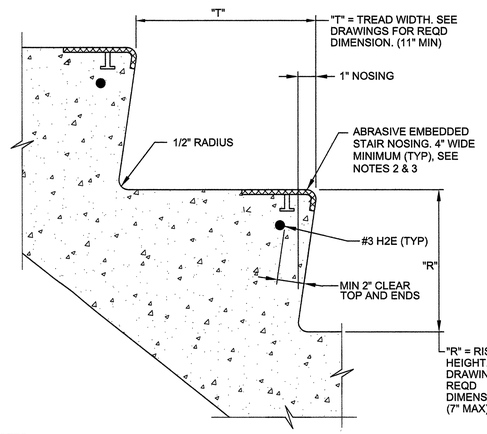

NOTES:

1. ANY FASTENERS FOR THE STAIR NOSING SHALL BE TYPE 304 OR 316 SST.
2. PROVIDE 4" BETWEEN END OF STAIR NOSING AND EDGE OF CONCRETE STEP. EMBEDDED STUD FOR STAIR NOSING SHOULD BE NO CLOSER THAN 6" FROM END OF THE STEP.
3. TOOL A GROOVE, 1/8" WIDE BY FULL WIDTH AND THICKNESS OF EMBEDDED NOSING, AT EACH END OF NOSING INCLUDING VERTICAL FACE AT RISER. FILL GROOVE WITH SYNTHETIC RUBBER SEALING COMPOUND.

A204 TYP — CONCRETE STEP

S 08/10/11

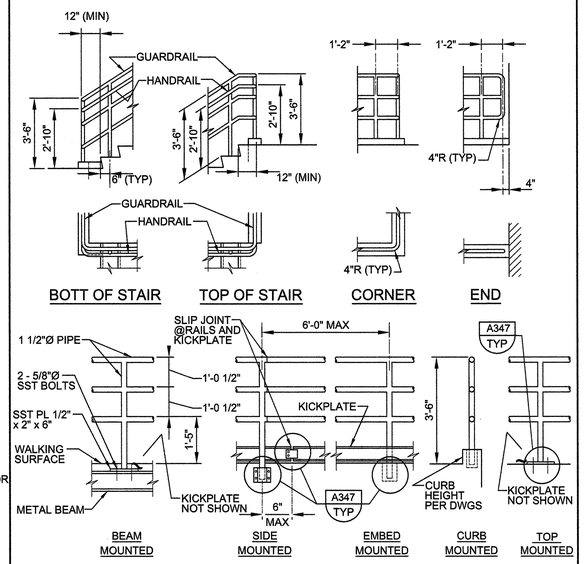

GUARDRAIL ELEVATION

NOTES:

1. THIS DETAIL IS APPLICABLE AT PRIVATE STAIRS IN F, H, AND S OCCUPANCIES WHERE OPERATOR ONLY ACCESSIBILITY IS REQUIRED. DETAILS AND INSTALLATION SHALL COMPLY WITH THE BUILDING CODE.
2. FOR ADDITIONAL REQUIREMENTS, SEE SPECIFICATIONS AND A340 TYP.
3. VARIOUS POST MOUNTING DETAILS ARE ILLUSTRATED. SEE DRAWINGS FOR SPECIFIC MOUNTING REQUIREMENTS.

A343 TYP — THREE RAIL GUARDRAIL (PRIVATE USE)

NS SHEET 03/01/06

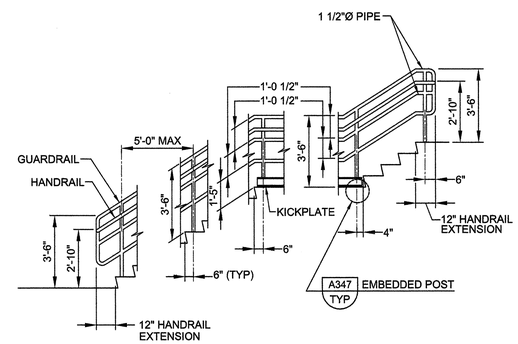

STAIR GUARDRAIL/HANDRAIL ELEVATION

NOTES:

1. SEE SPECIFICATIONS AND A340 TYP FOR ADDITIONAL REQUIREMENTS.
2. HANDRAIL EXTENSIONS ARE REQUIRED ON BOTH SIDES OF STAIR. THEY ARE NOT REQUIRED WHERE HANDRAIL IS CONTINUOUS.

A343 TYP — THREE RAIL GUARDRAIL (PRIVATE USE)

NS SHEET 2 OF 3 03/01/06

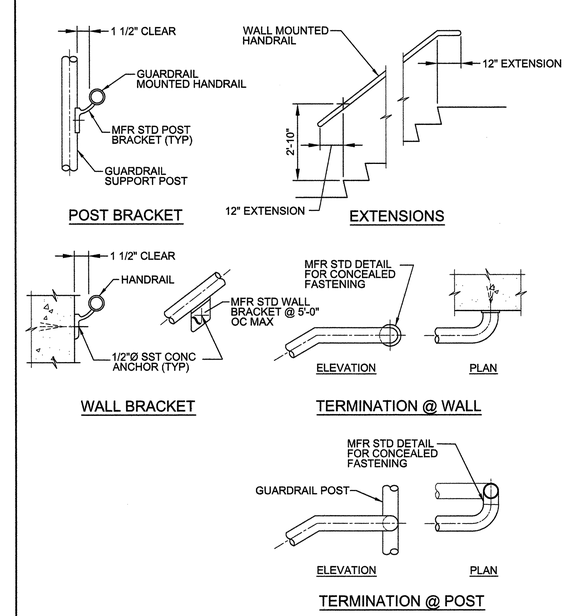

HANDRAIL DETAILS

A343 TYP — THREE RAIL GUARDRAIL (PRIVATE USE)

NS SHEET 3 OF 3 03/01/06

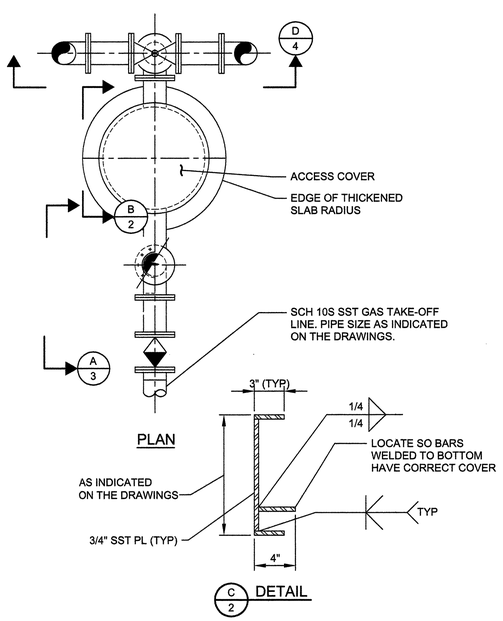

M103 TYP — RAISED ACCESSS COVER AND PIPING FOR CONCRETE DIGESTER DOME

R SHEET 1 OF 4 08/01/05 (NCT)

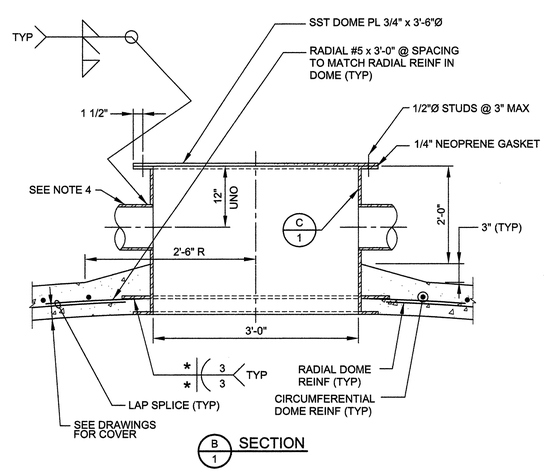

NOTES:

1. ALL BOLTS AND NUTS SHALL CONFORM TO IFI-104 GRADE 316L. ALL NUTS SHALL BE HEAVY HEX TYPE.
2. IF REQUIRED FOR UNIFORM BEARING AND WATER TIGHT SEAL, MACHINE CONTACT SURFACES OF MANHOLE FRAME AND COVER. GREASE CONTACT SURFACES OF NEOPRENE GASKET AND PLATE.
3. SCH 40 SST PIPE. PIPE SIZE AS INDICATED ON THE DRAWINGS.
4.
5. * = 1/3 BAR DIAMETER.

M103 TYP — RAISED ACCESSS COVER AND PIPING FOR CONCRETE DIGESTER DOME

SHEET 2 OF 4 08/01/05

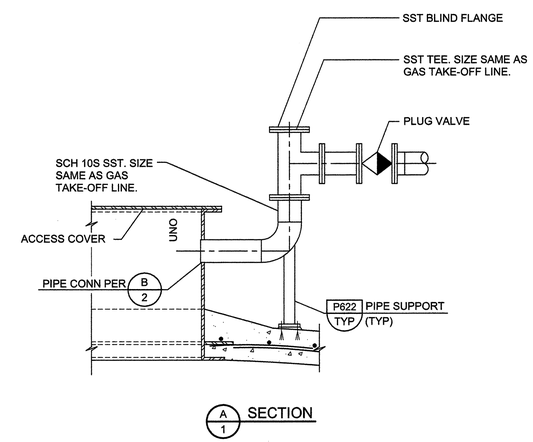

NOTES:

1. MOUNT MANOMETER AND MOISTURE/SEDIMENT TRAP TO SST PLATE WITH SST BOLTS, NUTS, AND WASHERS.
2. ISOLATE MANOMETER FROM PLATE WITH 1/8" THICK NEOPRENE GASKET.
3. COAT METAL PARTS OF MANOMETER WITH 2 COATS OF CLEAR ACRYLIC METAL FINISH.

M103 TYP — RAISED ACCESSS COVER AND PIPING FOR CONCRETE DIGESTER DOME

SHEET 3 OF 4 08/01/05 (NCT)

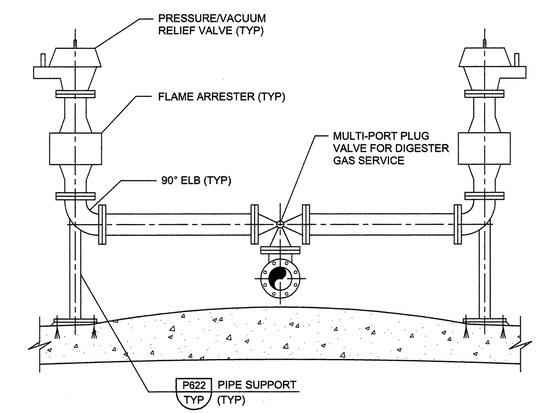

M103 TYP — RAISED ACCESSS COVER AND PIPING FOR CONCRETE DIGESTER DOME

SHEET 4 OF 4 08/01/05

PROFESSIONAL ENGINEER - STATE OF NEVADA
JOSE C. MACHADO JR.
Exp: 12-31-13
CIVIL
No. 18792

VERIFY SCALES
BAR IS ONE INCH ON ORIGINAL DRAWING
0 1"
IF NOT ONE INCH ON THIS SHEET, ADJUST SCALES ACCORDINGLY

DESIGNED	CE
DRAWN	OB
CHECKED	CHK
DATE	APRIL 2013

carollo

PROFESSIONAL ENGINEER - STATE OF NEVADA
DAVID A. GEISLER
Exp: 06-30-13
STRUCTURAL
No. 20469

REV.	DATE	DESCRIPTION	BY	APP'D

CARSON CITY PUBLIC WORKS
DIGESTER REHABILITATION PROJECT – PHASE I
CARSON CITY CIP NO. 5.1301

TYPICAL DETAILS

TYPICAL DETAILS 1

DRAWING NO. T-01

SHEET NO. 15 OF 20

Plot Date: 22-APR-2013 9:23:20 AM User: AFerrer Model: Layout1 ColorTable: gshade.ctb DesignScript: Carollo_Std_Pen_v0905.pen PlotScale: 1 LAST SAVED BY: aferrer

PROJECT NO. 9072A10 FILE NAME: 9072A10_T-01.dwg

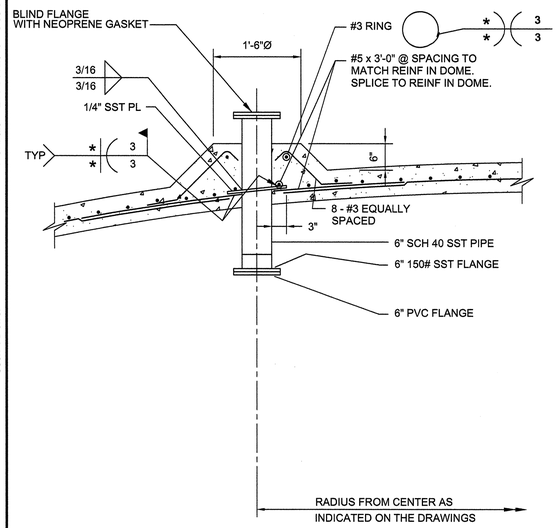

CLAMP

NOTES:

1. * = 1/3 BAR DIAMETER.

M112 TYP R — SAMPLE HATCH FOR CONCRETE DIGESTER DOME

SHEET 1 OF 2 — 08/01/05

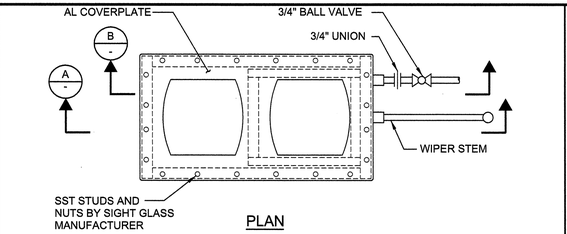

PLAN

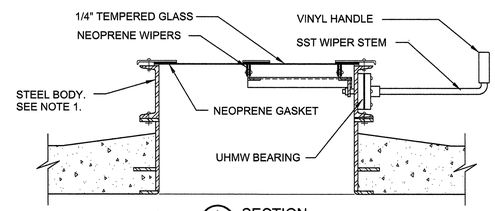

A SECTION

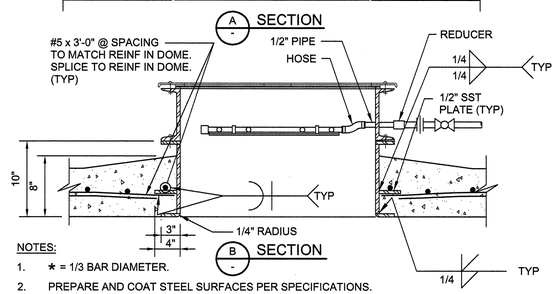

B SECTION

NOTES:

1. * = 1/3 BAR DIAMETER.
2. PREPARE AND COAT STEEL SURFACES PER SPECIFICATIONS.

M118 TYP — SIGHT GLASS FOR CONCRETE DIGESTER DOME

SHEET 1 OF 2 — 08/01/05

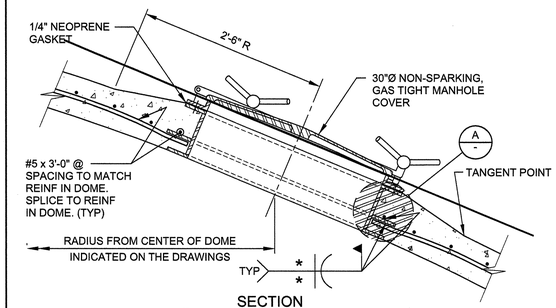

SECTION

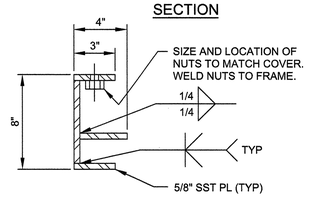

A DETAIL

NOTES:

1. * = 1/3 BAR DIAMETER.
2. ALL BOLTS AND NUTS SHALL CONFORM TO IFI-104 GRADE 316L. ALL NUTS SHALL BE HEAVY HEX TYPE.
3. IF REQUIRED FOR UNIFORM BEARING AND WATER TIGHT SEAL, MACHINE CONTACT SURFACES OF MANHOLE FRAME AND COVERS.
4. GREASE CONTACT SURFACES OF NEOPRENE GASKET AND STEEL.

M120 TYP — MANHOLE FOR CONCRETE DIGESTER DOME

08/01/05

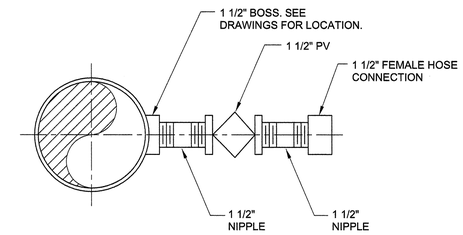

P203 TYP — FLUSHING CONNECTION

08-01-05

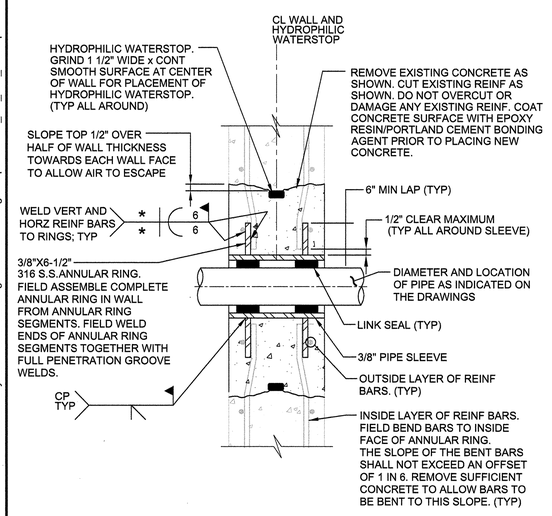

P300 TYP NS — PIPE PENETRATION THROUGH EXISTING TANK WALL

SHEET 1 OF 2 — 09/12/12

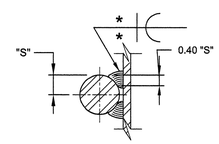

WELDED SPLICE BAR

NOTES:

1. FABRICATE SLEEVES FROM 3/8" THICK 316 STAINLESS STEEL PLATE. WELD JOINTS WITH FULL PENETRATION WELDS.
2. IN WALLS THICKER THAN 12", LINK SEAL SHALL BE INSTALLED AT BOTH ENDS OF WALL SLEEVE. SLEEVE DIAMETER SHALL BE PER LINK SEAL MANUFACTURER'S RECOMMENDATION.
3. CUT WALL REINF THAT INTERFERS WITH PIPE SLEEVE. DO NOT CUT OR DAMAGE ANY OTHER BARS.
4. * = 0.40 "S" REINF BAR RADIUS.
5. E 70 ELECTRODE FOR GRADE 40 REINF BARS; E 90 ELECTRODE FOR GRADE 60 REINF BARS.
6. SEE AWS D1.4 FOR WELDING PROCESS, PREHEAT REQUIREMENTS, AND OTHER DETAILS. SUBMIT WELDING PROCEDURE PER AWS.
7. USE FORMING WITH "BIRDS PEAK" ON BOTH WALL FACES FOR ACCESS FOR VIBRATOR AND TO ALLOW CONCRETE TO BE PLACED UNDER SLIGHT PRESSURE. AFTER FORMS REMOVED, REMOVE PROJECTING CONCRETE AND FINISH TO MATCH FINISH OF EXISTING WALL.

P300 TYP NS — PIPE PENETRATION THROUGH EXISTING TANK WALL

SHEET 2 OF 2 — 09/12/12

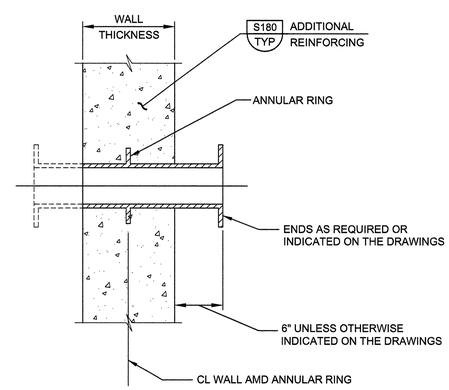

P312 TYP N — WALL THIMBLE FOR DIP

07/31/08

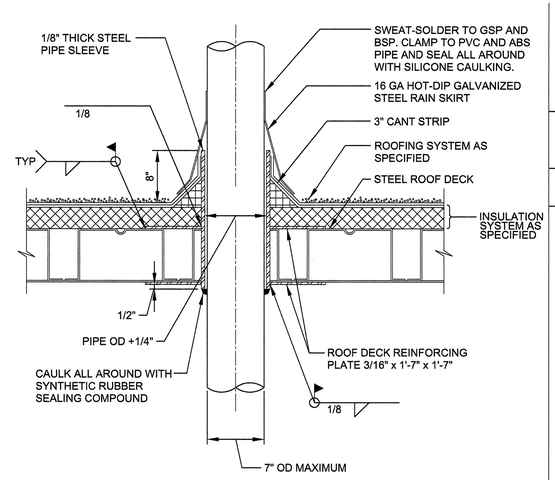

NOTES:

1. LOCATE PIPE BETWEEN WEBS ONLY.
2. SLEEVE LENGTH VARIES WITH INSULATION SYSTEM THICKNESS.

P504 TYP N — PIPE THROUGH STEEL ROOF DECK

08/01/05

VERIFY SCALES
BAR IS ONE INCH ON ORIGINAL DRAWING
0 1"
IF NOT ONE INCH ON THIS SHEET, ADJUST SCALES ACCORDINGLY

DESIGNED	DRAWN	CHECKED	DATE
CE	OB	CHK	APRIL 2013

carollo

STATE OF NEVADA — PROFESSIONAL ENGINEER — JAMES C. CHAMBERLIN JR. — Exp. 12-31-13 — Civil — No. 15792

REV.	DATE	DESCRIPTION	BY	APP'D

CARSON CITY PUBLIC WORKS
DIGESTER REHABILITATION PROJECT – PHASE I
CARSON CITY CIP NO. 5.1301
TYPICAL DETAILS
TYPICAL DETAILS 2

DRAWING NO. T-02

SHEET NO. 16 OF 20

Plot Date: 24-APR-2013 3:38:31 PM
User: AFerrer
Model: Layout1 ColorTable: gsitade.ctb DesignScript: Carollo_Std_Pen_v0905.pen PlotScale: 1
LAST SAVED BY: aferrer

PROJECT NO. 9072A10 FILE NAME: 9072A10_T-02.dwg

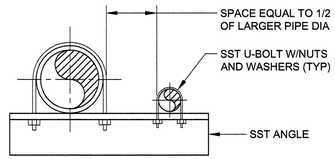

POSITION " A "

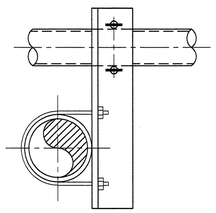

POSITION " B "

P601 CARRIER SUPPORT

TYP R 08/20/08

PIPE SIZE	
"D"	"A"
4	2
6	3
8	4
10	4
12	6

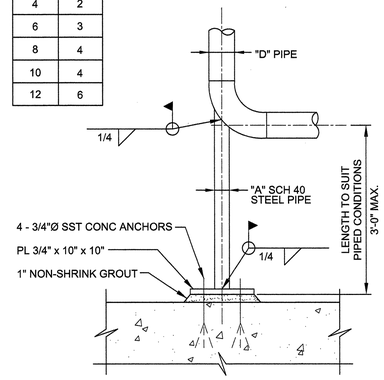

NOTES:

1. FOR SST PIPE, ALL PIPE SUPPORT MATERIALS SHALL BE SST.
2. HOT-DIP GALV SUPPORT AFTER FABRICATION, UNLESS MATERIALS ARE STAINLESS STEEL.

P622 STEEL PIPE SUPPORT

TYP N 07/31/08

ADJUSTABLE PIPE SADDLE SUPPORT SCHEDULE (INCHES)					
SIZE OF SUPPORTED PIPE	PIPE SIZE "A"	PIPE SIZE "B"	"C"	"D" MINIMUM	"D" MAXIMUM
2 1/2 *	2 1/2	1 1/2	9	8	13
3	2 1/2	1 1/2	9	8 1/2	13 1/2
3 1/2	2 1/2	1 1/2	9	8 1/2	13 1/2
4	3	2 1/2	9	9 1/2	14
6	3	2 1/2	9	10 1/2	15 1/2
8	3	2 1/2	9	11 1/2	16 1/2
10	3	2 1/2	9	13 1/2	18 1/2
12	3	2 1/2	9	15	19 1/2
14	4	3	11	16 1/2	20 1/2
16	4	3	11	17 1/2	22 1/2
18	6	3 1/2	13 1/2	19 1/2	24
20	6	3 1/2	13 1/2	21	25 1/2
24	6	4	13 1/2	23 1/2	28 1/2
30	6	4	13 1/2	27	31 1/2
32	6	4	13 1/2	28 1/2	32 1/2
36	6	4	13 1/2	30 1/2	34 1/2

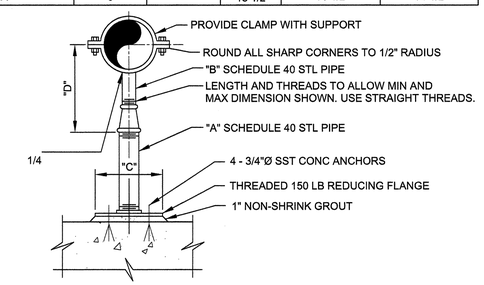

NOTES:

1. FOR SST PIPE, ALL PIPE SUPPORT MATERIALS SHALL BE SST.
2. * = USE 2 1/2" SUPPORTS FOR PIPES LESS THAN 2 1/2"Ø.

P624 ADJUSTABLE PIPE SUPPORT

TYP R 9072A10 05/16/09

PIPE SIZE	
"D"	"A"
4	2
6	2 1/2
8	4

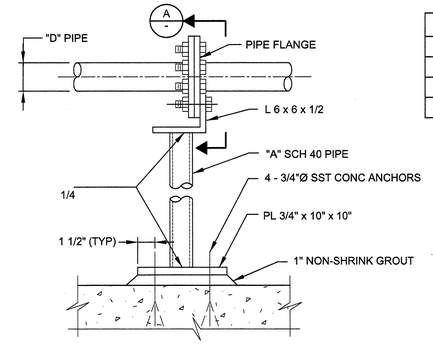

ELEVATION

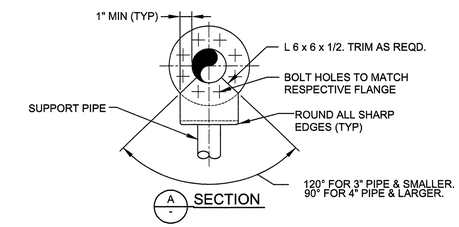

A SECTION

NOTE:

1. FOR SST PIPE, ALL PIPE SUPPORT MATERIALS SHALL BE SST.

P626 PIPE SUPPORT POST WITH PIPE FLANGE CONNECTION

TYP R 9072A10 07/31/08

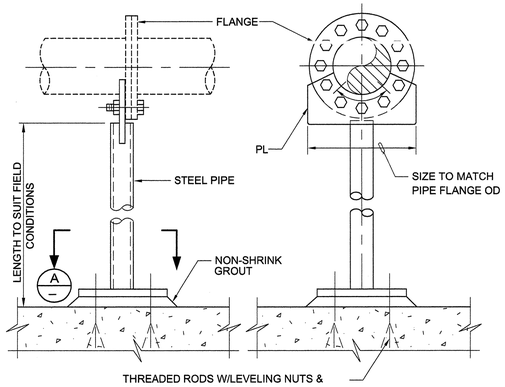

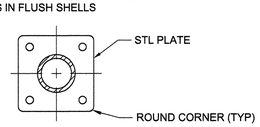

A SECTION

NOTES:

1. FOR SST PIPE, ALL PIPE SUPPORT MATERIALS SHALL BE SST.
2. CHEMICAL ANCHORS MAY BE SUBSTITUTED FOR FLUSH SHELLS AND ALL THREAD RODS.
3. IF SUPPORT IS SUBMERGED OR LOCATED BELOW THE TOP OF WALL IN WATER BEARING STRUCTURE, MATERIAL SHALL BE STAINLESS STEEL. IN ALL OTHER AREAS, MATERIAL SHALL BE HOT-DIP GALVANIZED STEEL UNLESS OTHERWISE INDICATED ON THE DRAWINGS.
4. PROVIDE PIPE FLANGES AT PIPE SUPPORT LOCATIONS.

P627 PIPE SUPPORT

TYP R 9072A10 08-20-08

1. CONCRETE CONSTRUCTION SHALL COMPLY WITH ACI "BUILDING CODE REQUIREMENTS FOR STRUCTURAL CONCRETE" (ACI 318) AND "CODE REQUIREMENTS FOR ENVIRONMENTAL ENGINEERING CONCRETE STRUCTURES (ACI 350-06) AND COMMENTARY (ACI 350R-06)."
2. UNLESS OTHERWISE INDICATED ON THE DRAWINGS, MINIMUM REINFORCEMENT OF CONCRETE WALLS OR SLABS SHALL BE:
   10" THICK OR LESS - USE #5 @ 12" EW
   MORE THAN 10" THICK - USE #5 @ 12" EW EF
3. WALL REINFORCEMENT AT CORNERS OR JUNCTIONS OF WALLS SHALL BE CONTINUOUS, LAP SPLICED, OR TERMINATED IN AN ACI STANDARD 90 DEGREE HOOK. LAP SPLICES SHALL CONFORM WITH NOTE 12.
4. UNLESS OTHERWISE INDICATED ON THE DRAWINGS, BARS SHALL BE DOWELED. DOWELS SHALL BE THE SAME SIZE AND SPACING AS THE REINFORCEMENT WHICH IS SPLICED TO THE DOWELS.
5. SLABS, BEAMS AND COLUMN REINFORCING BARS SHALL HAVE A MINIMUM EXTENSION OR ANCHORAGE INTO SUPPORTS IN ACCORDANCE WITH ACI 318 AND ACI 350.
6. STIRRUP SUPPORT BARS SHALL BE PROVIDED TO SECURE TOP BARS AGAINST DISPLACEMENT AS REQUIRED.
7. UNLESS OTHERWISE INDICATED ON THE DRAWINGS, CONCRETE COVER OVER #11 AND SMALLER REINF BARS SHALL BE AS FOLLOWS:
   A. SLABS AND JOISTS:
      FORMED CONCRETE SURFACES AND UNFORMED TOP SURFACES FOR DRY CONDITIONS:
      #7 BARS AND SMALLER.....1"
      #8 BARS AND LARGER.....1 1/2"
      FORMED CONCRETE SURFACES AND UNFORMED TOP SURFACES EXPOSED TO WEATHER, IN CONTACT WITH SOIL OR WATER, OR LOCATED OVER WATER.....2"
   B. BEAMS AND COLUMNS:
      FORMED CONCRETE SURFACES FOR DRY CONDITIONS:
      STIRRUPS, SPIRALS, AND TIES.....1 1/2"
      PRINCIPAL REINFORCEMENT.....2"
      FORMED CONCRETE SURFACES EXPOSED TO WEATHER, IN CONTACT WITH SOIL OR WATER, OR BEAMS LOCATED OVER WATER:
      STIRRUPS AND TIES.....2"
      PRINCIPAL REINFORCEMENT.....2 1/2"
   C. WALLS:
      FORMED CONCRETE SURFACES FOR DRY CONDITIONS:
      #7 BARS AND SMALLER.....1"
      #8 BARS AND LARGER.....1 1/2"
      FORMED CONCRETE SURFACES EXPOSED TO WEATHER, OR IN CONTACT WITH SOIL OR WATER.....2"

S101 REINFORCED CONCRETE NOTES

TYP S SHEET 1 OF 3 08/31/07

   D. FOOTINGS AND BASE SLABS:
      FORMED VERTICAL CONCRETE SURFACES.....2"
      AT UNFORMED CONCRETE SURFACES CAST AGAINST THE SOIL OR CONCRETE WORK MATS.....3"
      TOP SURFACE OF FOOTINGS AND BASE SLABS.....SAME AS SLABS
8. KEYWAYS AND WATERSTOP SHALL END 3" BELOW THE TOP OF WALLS, UNLESS THERE IS A SLAB ON TOP OF THE WALL, IN WHICH CASE IT SHALL END AT THE BOTTOM OF THE SLAB. IN JOINTS WHERE WATERSTOP TERMINATES AT ADJOINING SLAB OR WALL, WATERSTOP SHALL BE EMBEDDED IN ADJOINING SLAB OR WALL A MINIMUM OF 6".
9. CONCRETE CURING SHALL BE IN ACCORDANCE WITH THE CONTRACT DOCUMENTS. WHERE WATER CURING IS REQUIRED, MEMBRANE CURING IS NOT ALLOWED. THE CONTRACTOR IS WARNED THAT WATER CURING IS DIFFICULT AT TIMES DUE TO WIND AND DRY CONDITIONS. THE CONTRACTOR SHALL STUDY REQUIREMENTS AND SHALL FURNISH ADEQUATE SYSTEMS TO PROVIDE WATER CURING WHERE REQUIRED. TOP OF WALLS SHALL BE KEPT VISIBLY MOIST AT ALL TIMES AND SHALL BE FLOODED NOT LESS THAN THREE TIMES DAILY.
10. WATERSTOP SHALL BE PLACED IN CONSTRUCTION, AND EXPANSION JOINTS IN WATERBEARING SLABS AND WALLS UNLESS OTHERWISE INDICATED ON THE DRAWINGS, AND IN WALLS AND SLABS SUBJECTED TO GROUNDWATER. WATERSTOP IN THE WALLS SHALL BE CARRIED INTO SLABS AND SHALL BE SPLICED WITH THE WATERSTOP IN THE SLABS.
11. NO BACKFILL SHALL BE PLACED AGAINST WALLS UNTIL:
    A. WALLS HAVE BEEN CAST FULL HEIGHT OF STRUCTURE AND CONCRETE HAS REACHED THE SPECIFIED STRENGTH
    B. CONNECTING SLABS AND BEAMS HAVE BEEN CAST AND CONCRETE HAS REACHED THE SPECIFIED STRENGTH.
12. LAP SPLICES:
    A. WHEN MULTIPLE BARS ARE SPLICED AT THE SAME SECTION, THE CLEAR BAR SPACING IS THE MINIMUM CLEAR DISTANCE BETWEEN THE BARS OUTSIDE THE SPLICE LENGTH LESS ONE BAR DIAMETER.
    B. UNLESS OTHERWISE INDICATED ON THE DRAWINGS, THE BARS AT A LAP SPLICE SHALL BE IN CONTACT WITH EACH OTHER.
    C. FOLLOWING TABULATED VALUES ARE CALCULATED FOR:
       F_y = 60,000 PSI FOR REINFORCING BARS
       F'_c = 4,000 PSI FOR CONCRETE
    D. TOP BARS ARE HORIZONTAL REINFORCEMENT SO PLACED THAT MORE THAN 12 INCHES OF FRESH CONCRETE IS CAST IN THE MEMBER BELOW THE BAR.

S101 REINFORCED CONCRETE NOTES

TYP S SHEET 2 OF 3 08/31/07

PROFESSIONAL ENGINEER-STATE OF NEVADA
JOSE C. MACHADO JR.
Exp: 12-31-13
CIVIL
No. 18792

VERIFY SCALES
BAR IS ONE INCH ON ORIGINAL DRAWING
0 1"
IF NOT ONE INCH ON THIS SHEET, ADJUST SCALES ACCORDINGLY

DESIGNED	DRAWN	CHECKED	DATE
CE	OB	CHK	APRIL 2013

carollo

PROFESSIONAL ENGINEER-STATE OF NEVADA
DAVID A. GEISLER
Exp: 06-30-13
STRUCTURAL
No. 20459

REV.	DATE	DESCRIPTION	BY	APP'D

CARSON CITY PUBLIC WORKS
DIGESTER REHABILITATION PROJECT – PHASE I
CARSON CITY CIP NO. 5.1301
TYPICAL DETAILS
TYPICAL DETAILS 3

DRAWING NO. T-03

SHEET NO. 17 OF 20

Plot Date: 22-APR-2013 9:24:07 AM User: AFerrer Model: Layout1 ColorTable: gshade.ctb DesignScript: Carollo_Std_Pen_v0905.pen PlotScale: 1:1 LAST SAVED BY: aferrer

PROJECT NO. 9072A10 FILE NAME: 9072A10_T-03.dwg

E. HORIZONTAL BARS IN CIRCULAR WALLS OF HYDRAULIC STRUCTURES SHALL BE SPLICED WITH TOP BAR LAP SPLICES. ADJACENT LAP SPLICES SHALL BE STAGGERED HORIZONTALLY BY NOT LESS THAN ONE LAP LENGTH NOR 3 FEET FROM CENTER OF LAP SPLICE BELOW TO ADJACENT CENTER OF LAP SPLICE ABOVE, AND SHALL NOT COINCIDE IN VERTICAL ARRAYS MORE FREQUENTLY THAN EVERY THIRD BAR.

REINFORCING BAR LAP SPLICE				
BAR SIZE	MINIMUM COVER (BAR DIA)	MINIMUM CLEAR BAR SPACING (BAR DIA)	LAP SPLICE LENGTH (INCHES)	
			TOP BARS	OTHER BARS
#4	MORE THAN 1	MORE THAN 2	32 *	25 *
	MORE THAN 2	MORE THAN 4	20	16
#5	MORE THAN 1	MORE THAN 2	40 *	31 *
	MORE THAN 2	MORE THAN 4	26	20
#6	MORE THAN 1	MORE THAN 2	48 *	37 *
	MORE THAN 2	MORE THAN 4	30	24
#7	MORE THAN 1	MORE THAN 2	70 *	54 *
	MORE THAN 2	MORE THAN 4	43	33
#8	MORE THAN 1	MORE THAN 2	81 *	62 *
	MORE THAN 2	MORE THAN 4	50	38
#9	MORE THAN 1	MORE THAN 2	90 *	70 *
	MORE THAN 2	MORE THAN 4	56	42
#10	MORE THAN 1	MORE THAN 2	104 *	81 *
	MORE THAN 2	MORE THAN 4	62	48
#11	MORE THAN 1	MORE THAN 2	114 *	88 *
	MORE THAN 2	MORE THAN 4	69	54

NOTES:

1. THE SPLICE LENGTH SHALL BE SELECTED ONLY WHEN BOTH REQUIREMENTS OF THE COVER AND BAR SPACING ARE SATISFIED.
2. * IF THE CLEAR SPACING IS LESS THAN OR EQUAL TO TWO BAR DIAMETERS OR THE COVER IS LESS THAN OR EQUAL TO ONE BAR DIAMETER, THE LAP SPLICE LENGTH SHALL BE INCREASED BY 50 PERCENT.

S101 TYP S — REINFORCED CONCRETE NOTES

SHEET 3 OF 3 06-01-03

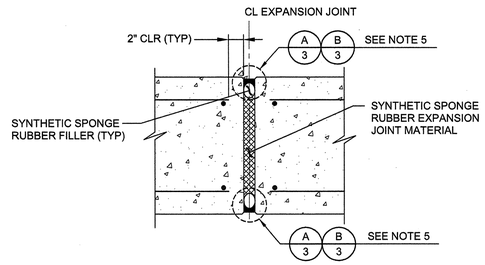

NON-WATER BEARING SLAB OR WALL

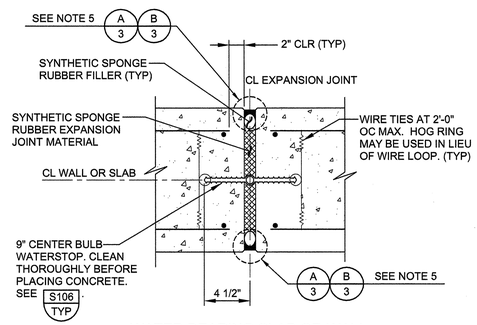

WATER BEARING SLAB OR WALL

S130 TYP NS — EXPANSION JOINT

SHEET 1 OF 3 03/16/09

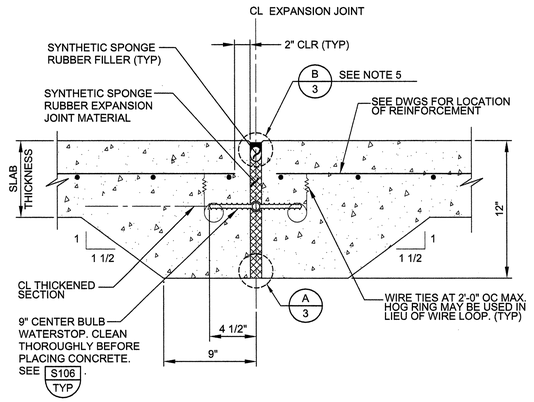

WATER BEARING SLAB LESS THAN 12" THICK

S130 TYP NS — EXPANSION JOINT

SHEET 2 OF 3 03/16/09

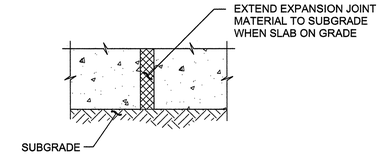

A 1 DETAIL - SLAB ON GRADE

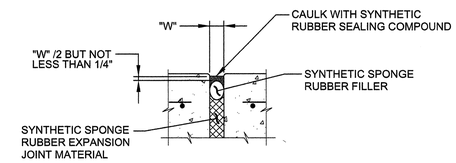

B 1 DETAIL

NOTES:

1. FOR WALLS, FORM ALL JOINT EDGES AT 1/4" CHAMFER.
2. FOR SLABS, EDGE TOP OF EXPOSED SLAB JOINT EDGES AT 1/4" RADIUS.
3. FOR UNDERSIDE OF EXPOSED SLABS, FORM JOINT EDGES AT 1/4" CHAMFER.
4. "W" = 1" UNLESS OTHERWISE INDICATED ON THE DRAWINGS. MIN JOINT WIDTH = 3/8". MIN JOINT WIDTH =3/8".
5. USE A - AT UNDERSIDE OF SLABS ON GRADE ONLY. USE B - AT ALL OTHER LOCATIONS.

S130 TYP NS — EXPANSION JOINT

SHEET 3 OF 3 03/16/09

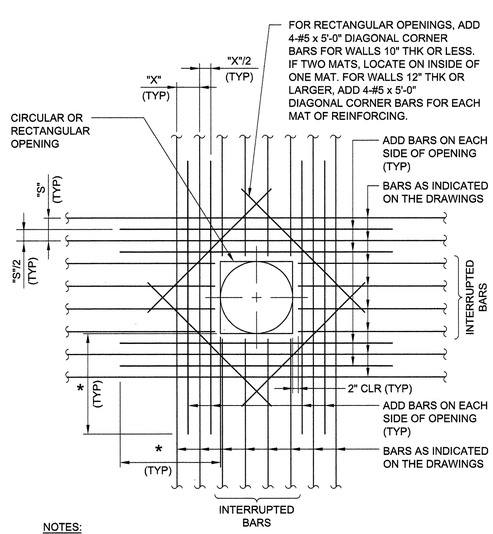

NOTES:

1. AREA OF ADD BARS AT EACH EDGE OF OPENING IN EACH DIRECTION SHALL MATCH 1/2 THE CROSS SECTIONAL AREA OF THE INTERRUPTED BARS.
2. PROVIDE STANDARD ACI HOOKS ON BARS IF STRAIGHT EXTENSION, PAST THE OPENING, CANNOT BE ACHIEVED.
3. PLACE ADD BARS IN SAME PLANES AS INTERRUPTED REINFORCING.
4. PLACE #5 DIAGONAL BARS UNDER INTERRUPTED REINFORCING.
5. *DIMENSION EQUALS OPENING DIMENSION MEASURED PERPENDICULAR TO ADD BARS PLUS LAP SPLICE LENGTH.

S180 TYP NS — ADDITIONAL REINFORCING AT OPENING IN CONCRETE SLABS OR WALLS

PROJECT NO. 9072A10 FILE NAME: 9072A10_T-04.dwg

VERIFY SCALES
BAR IS ONE INCH ON ORIGINAL DRAWING
0 1"
IF NOT ONE INCH ON THIS SHEET, ADJUST SCALES ACCORDINGLY

DESIGNED CE
DRAWN OB
CHECKED CHK
DATE APRIL 2013

carollo

STATE OF NEVADA PROFESSIONAL ENGINEER DAVID A. GEISLER No. 20456 Exp: 06-30-13 STRUCTURAL

REV.	DATE	DESCRIPTION	BY	APP'D

CARSON CITY PUBLIC WORKS
DIGESTER REHABILITATION PROJECT – PHASE I
CARSON CITY CIP NO. 5.1301
TYPICAL DETAILS
TYPICAL DETAILS 4

DRAWING NO. T-04

SHEET NO. 18 OF 20

Plot Date: 22-APR-2013 9:24:27 AM User: AFerrer
Model: Layout1 ColorTable: gstrade.ctb DesignScript: Carollo_Std_Pen_v0905.pen PlotScale: 1
LAST SAVED BY: aferrer

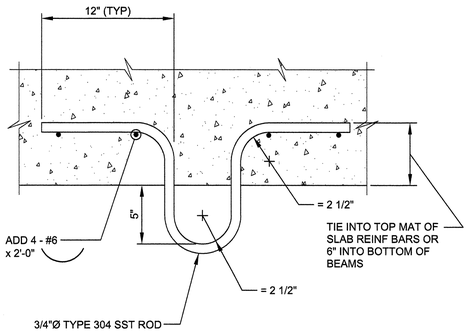

NOTE:

1. VERTICAL LOAD LIMIT EQUALS 2,000 POUNDS.

S250 / TYP — LIFTING RING

NS 08/01/05

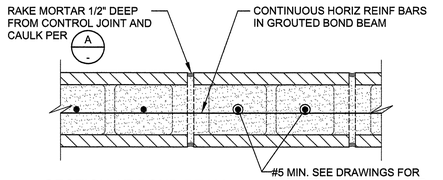

SECTION AT BOND BEAM
WITH SINGLE WALL REINF MAT

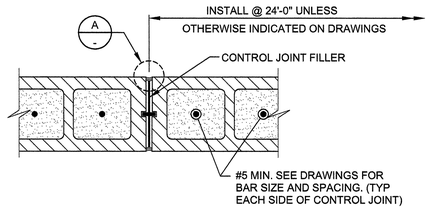

SECTION ABOVE OR BELOW BOND BEAM
WITH SINGLE WALL REINF MAT

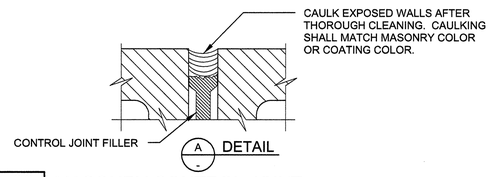

S430 / TYP — MASONRY CONTROL JOINT

S SHEET 1 OF 2 08/01/05

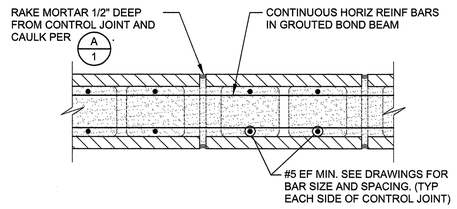

SECTION AT BOND BEAM
WITH DOUBLE WALL REINF MAT

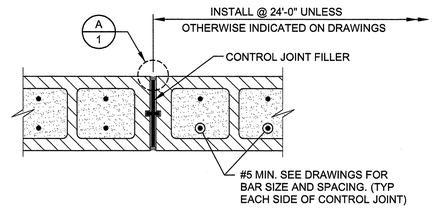

SECTION ABOVE OR BELOW BOND BEAM
WITH DOUBLE WALL REINF MAT

S430 / TYP — MASONRY CONTROL JOINT

S SHEET 2 OF 2 08/01/05

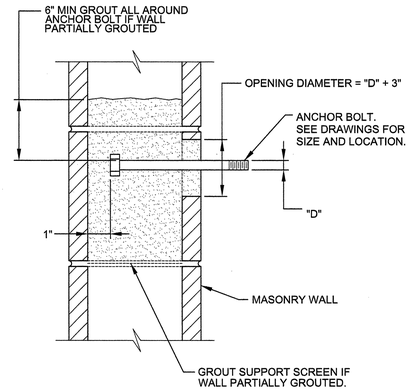

NOTES:

1. "D" = DIAMETER OF ANCHOR BOLT.
2. SET ANCHOR BOLTS WITH TEMPLATE.
3. CUT BLOCK WEB AS REQUIRED TO ALLOW PLACEMENT OF ANCHOR BOLT WITH 1/2" MINIMUM OF GROUT BETWEEN ANCHOR BOLT AND BLOCK.

S440 / TYP — ANCHOR BOLTS IN MASONRY

08/01/05

VERIFY SCALES
BAR IS ONE INCH ON ORIGINAL DRAWING
0 1"
IF NOT ONE INCH ON THIS SHEET, ADJUST SCALES ACCORDINGLY

DESIGNED	DRAWN	CHECKED	DATE
CE	OB	CHK	APRIL 2013

carollo

STATE OF NEVADA
DAVID A. GEISLER
Exp: 06-30-13
STRUCTURAL
No. 20429
PROFESSIONAL ENGINEER

REV.	DATE	DESCRIPTION	BY	APP'D

CARSON CITY PUBLIC WORKS
DIGESTER REHABILITATION PROJECT – PHASE I
CARSON CITY CIP NO. 5.1301
TYPICAL DETAILS

TYPICAL DETAILS 5

DRAWING NO.
T-05

SHEET NO.
19 OF 20

LAST SAVED BY: aferrer Model: Layout1 ColorTable: gshade.ctb DesignScript: Carollo_Std_Pen_v0905.pen PlotScale: 1 User: AFerrer Plot Date: 22-APR-2013 9:24:46 AM

PROJECT NO. 9072A10 FILE NAME: 9072A10_T-05.dwg