EAST FIFTH STREET SEWER REHABILITATION

CARSON CITY, NEVADA
PROJECT 5.1202

BOARD OF SUPERVISORS

Robert Crowell	Mayor
Karen Abowd	Supervisor
Brad Bonkowski	Supervisor
John McKenna	Supervisor
Jim Shirk	Supervisor
Alan Glover	City Clerk

DESIGNED FOR:

CARSON CITY PUBLIC WORKS DEPARTMENT
OPERATIONS DIVISION
3505 BUTTI WAY
CARSON CITY, NV 89701
887-2355

GENERAL NOTES:

1. ALL WORK SHALL CONFORM TO THE "STANDARD SPECIFICATIONS FOR PUBLIC WORKS CONSTRUCTION" (SSPWC) AND THE "STANDARD DETAILS FOR PUBLIC WORKS CONSTRUCTION" (SDPWC) AS ADOPTED BY CARSON CITY. THE CONTRACTOR SHALL OBTAIN A PERMIT FOR PUBLIC WORKS CONSTRUCTION FROM THE CARSON CITY PERMIT CENTER PRIOR TO THE START OF CONSTRUCTION.

   ALL WORK IN NDOT RIGHT-OF-WAY SHALL CONFORM TO THE STATE OF NEVADA DEPARTMENT OF TRANSPORTATION STANDARD SPECIFICATIONS FOR ROAD AND BRIDGE CONSTRUCTION, 2001 EDITION AND THE STATE OF NEVADA DEPARTMENT OF TRANSPORTATION STANDARD PLANS FOR ROAD AND BRIDGE CONSTRUCTION, 2007 EDITION.

2. ALL TRAFFIC CONTROL AND BARRICADING WITHIN THE CARSON CITY RIGHT-OF-WAY SHALL CONFORM TO SECTION 100.33, 332.04 AND 332.05 OF THE STANDARD SPECIFICATIONS, PART VI OF THE MANUAL ON UNIFORM TRAFFIC CONTROL DEVICES, LATEST EDITION, AND THE UNR T2 CENTER, TEMPORARY TRAFFIC CONTROL GUIDELINES LATEST EDITION. A TRAFFIC CONTROL PLAN MUST BE SUBMITTED AND APPROVED BY THE CARSON CITY ENGINEERING DIVISION PRIOR TO ANY STREET CLOSURES.

3. THE CONTRACTOR SHALL CALL UNDERGROUND SERVICE ALERT "CALL BEFORE YOU DIG" (811) OR (1-800-227-2600) AT LEAST TWO (2) WORKING DAYS PRIOR TO START OF CONSTRUCTION AND COMPLY WITH THE REQUIREMENTS OF NRS AND NAC 455 THROUGHOUT THE COURSE OF THE WORK, SEWER SERVICE LATERALS ARE NOT OWNED OR MARKED BY CARSON CITY.

4. THE CONTRACTOR SHALL CALL THE CARSON CITY ENGINEERING DIVISION (887-2300) TWO (2) WORKING DAYS PRIOR TO THE START OF CONSTRUCTION. THE CONTRACTOR SHALL CALL ONE (1) WORKING DAY PRIOR TO REQUIRED INSPECTIONS AND TESTING. THE REQUIRED INSPECTIONS AND TESTING ARE LISTED ON THE INSPECTION RECORD ISSUED WITH EACH PERMIT. THE CONTRACTOR MUST HAVE THE PERMIT NUMBER AND THE DESCRIPTION LISTED ON THE INSPECTION RECORD TO SCHEDULE REQUIRED INSPECTIONS AND TESTING. FOR CITY CONTRACTED PROJECTS, THE CONTRACTOR SHALL SCHEDULE INSPECTIONS PER THE CONTRACT DOCUMENTS.

5. FINAL INSPECTIONS WILL BE PERFORMED BY CARSON CITY ENGINEERING DIVISION ACCORDING TO THE CARSON CITY INSPECTIONS AND TESTING PROCEDURES. NOTE: THESE PROCEDURES REQUIRE SUBMITTAL OF RECORD DRAWING PRINTS BY THE CONTRACTOR AND 10 WORKING DAYS TO PREPARE A FINAL PUNCH LIST. ALL CONDITIONS OF THE FINAL INSPECTION MUST BE COMPLETED PRIOR TO FINAL ACCEPTANCE OR ANY APPROVAL OF A CERTIFICATE OF OCCUPANCY BY THE CARSON CITY ENGINEERING DIVISION.

6. MODIFICATIONS TO THE APPROVED PLANS REQUIRES REVIEW AND APPROVAL BY THE CARSON CITY ENGINEERING DIVISION. WORK PERFORMED WITHOUT WRITTEN APPROVAL BY CARSON CITY ENGINEERING WILL REQUIRE REMOVAL AT THE CONTRACTORS EXPENSE.

7. THE APPROVED PLAN, PERMIT AND INSPECTION RECORD MUST BE ON THE JOB SITE AT ALL TIMES.

8. PLAN APPROVAL FOR SEWER AND WATER CONSTRUCTION SHALL EXPIRE ONE YEAR FROM DATE OF APPROVAL UNLESS CONSTRUCTION HAS BEEN INITIATED. (CCMC 12.06.180F, 12.01.140D)

9. THE CONTRACTOR WILL BE SOLELY AND COMPLETELY RESPONSIBLE FOR ACQUIRING A STORMWATER DISCHARGE PERMIT FROM THE NEVADA DIVISION OF ENVIRONMENTAL PROTECTION (NDEP) INCLUDING DEVELOPING, SUBMITTING AND IMPLEMENTING A STORM WATER POLLUTION PREVENTION PLAN (SWPPP). THE CONTRACTOR SHALL DEVELOP, PLACE AND MAINTAIN STORM WATER PROTECTION DEVICES IN COMPLIANCE WITH THE NEVADA CONTRACTORS FIELD GUIDE FOR CONSTRUCTION SITE BEST MANAGEMENT PRACTICES (JUNE 2008).

10. THE LOCATION OF EXISTING UTILITIES SHOWN ON THESE DRAWINGS IS BASED ON THE BEST INFORMATION AVAILABLE TO THE ENGINEER. IT SHALL BE THE CONTRACTORS' RESPONSIBILITY TO VERIFY THESE LOCATIONS AT THE PROPOSED POINTS OF CONNECTIONS AND IN AREAS OF POSSIBLE CONFLICT WITH NEW UTILITY INSTALLATION, PRIOR TO BEGINNING CONSTRUCTION. POTHOLING IS REQUIRED. SHOULD THE CONTRACTOR FIND ANY DISCREPANCIES BETWEEN THE CONDITIONS EXISTING IN THE FIELD AND THE INFORMATION SHOWN ON THESE DRAWINGS, HE SHALL NOTIFY THE ENGINEER BEFORE PROCEEDING WITH CONSTRUCTION.

11. THE CONTRACTOR WILL BE SOLELY AND COMPLETELY RESPONSIBLE FOR THE CONDITIONS OF THE JOB SITE, INCLUDING SAFETY OF ALL PERSONS AND PROPERTY DURING PERFORMANCE OF THE WORK. THIS REQUIREMENT WILL APPLY CONTINUOUSLY AND NOT BE LIMITED TO NORMAL WORKING HOURS. THE CONTRACTOR SHALL BE RESPONSIBLE FOR THE DESIGN AND CONSTRUCTION OF PROPER SHORING OF TRENCHES IN ACCORDANCE WITH OCCUPATIONAL SAFETY LAWS. THE DUTIES OF THE ENGINEER DO NOT INCLUDE REVIEW OF THE ADEQUACY OF THE CONTRACTOR'S SAFETY IN, ON, OR NEAR THE CONSTRUCTION SITE.

12. SHOULD IT APPEAR THAT THE WORK TO BE DONE, OR ANY MATTER RELATIVE THERETO, IS NOT SUFFICIENTLY DETAILED OR EXPLAINED ON THESE PLANS, THE CONTRACTOR SHALL CONTACT THE ENGINEER FOR SUCH FURTHER EXPLANATIONS AS MAY BE NECESSARY.

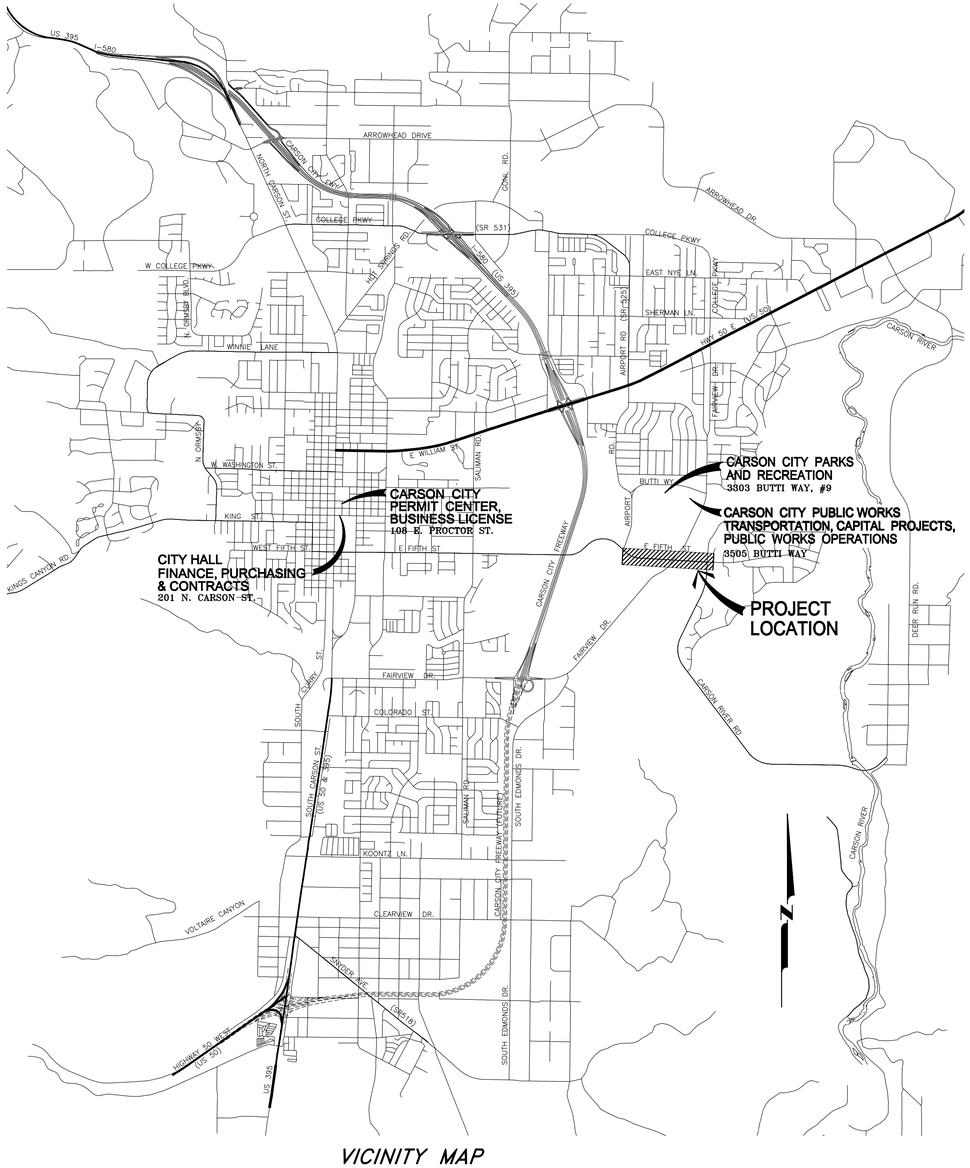

VICINITY MAP

N.T.S.

SHEET INDEX

1	TITLE SHEET
2	INDEX SHEET & STORMWATER PROTECTION
3	E. FIFTH ST. – PLAN & PROFILE (STA 111+00 TO STA 119+00)
4	E. FIFTH ST. – PLAN & PROFILE (STA 119+00 TO STA 127+00)
5	E. FIFTH ST. – PLAN & PROFILE (STA 127+00 TO 134+00)
6	DETAILS
7	DETAILS

REVIEWED FOR CITY REQUIREMENTS:

DARREN SCHULZ, P.E., – DEPUTY PUBLIC WORKS DIRECTOR DATE

Call before you Dig
Avoid cutting underground utility lines. It's costly.
Call 811
OR
1-800-227-2600

APPLICATION NO. _____

DESIGNED BY: BD
DRAWN BY: BD
CHECKED BY: DR
DWG NO.: 5-1202TS
SCALE (HORIZ): N/A
SCALE (VERT): XX
PLOT DATE: 2013_MAY_01

CARSON CITY
PUBLIC WORKS DEPARTMENT
3505 BUTTI WAY CARSON CITY, NEVADA 89701
PH: 887-2112 FAX: 887-2112

REV.	DATE	DESCRIPTION	BY	APP'D

EAST FIFTH STREET
SEWER REHABILITATION
PROJECT No. 5.1202

TITLE SHEET

SHEET 1 OF 7

PERMIT No.

H:\PROJECTS\5.1202 5th Street SS Rehab\dwg\5-1202sDWG, TITLE-SHT, 5/21/2013 8:58:35 AM, bdogal

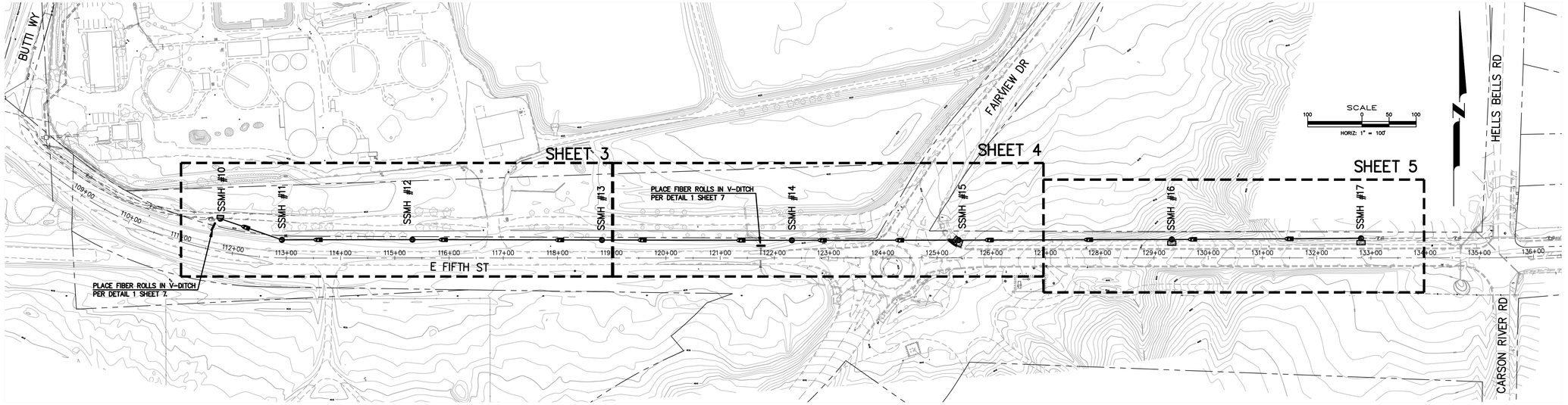

SHEET INDEX

SCALE: 1"=100'

LEGEND

EXISTING		PROPOSED
	APPROX. PROPERTY LINE	
	DESIGN LINE	
	EASEMENT	
	FENCE	
	EDGE OF PAVEMENT	
	CONSTRUCTION NOTE	(XX)
W	WATER MAIN	
	WATER VALVE	
	FIRE HYDRANT	
	AIR RELEASE VALVE	
18"SS	SEWER PIPE	
S	SEWER MANHOLE	S
18"SD	STORM DRAIN PIPE	
D	STORM DRAIN MANHOLE	
	STORM DRAIN CURB INLET	
61 + 4644.45 DESC	SURVEY POINT	
	SURVEY CONTROL POINT	
4800	CONTOUR ELEVATION	
x 4627.30	SPOT ELEVATION	
PP	POWER POLE	
OHP	OVERHEAD POWER	
	GUY WIRE	
	AC PATCH	

ABBREVIATIONS

AB	AGGREGATE BASE	Q	FLOW (CFS)	R	RADIUS
AC	ASPHALTIC CONCRETE	R	RADIUS	REQ'D	REQUIRED
ACP	ASBESTOS CEMENT PIPE	RCP	REINFORCED CONCRETE PIPE	R/W, ROW	RIGHT OF WAY
AGG	AGGREGATE	RCW	RECLAIMED WATER	RT	RIGHT
APN	ASSESSORS PARCEL NUMBER	GV	GAS VALVE/GATE VALVE	S	SLOPE, SOUTH
ASTM	AMERICAN SOCIETY FOR TESTING AND MATERIALS	HORIZ	HORIZONTAL	SCH	SCHEDULE
		HP	HIGH POINT	SD	STORM DRAIN
BC	BEGIN CURVE	HYD	HYDRANT	SDMH	STORM DRAIN MANHOLE
BVC	BEGIN VERTICAL CURVE	IE	INVERT ELEVATION	SDR	STANDARD DIMENSION RATIO
BLDG	BUILDING	INST	INSTALL	SDWK	SIDEWALK
BOW	BACK OF WALK	IRRG	IRRIGATION LINE	SF	SQUARE FEET
CATV	CABLE TV	L	LENGTH	SHT	SHEET
CB	CATCH BASIN	LAT	LATERAL	SQ	SQUARE
C&G	CURB & GUTTER	LF	LINEAL FEET	SS	SANITARY SEWER
CL	CENTER LINE, CLASS	MAX	MAXIMUM	SSMH	SANITARY SEWER MANHOLE
CMP	CORRUGATED METAL PIPE	MDD	MAXIMUM DRY DENSITY	STA	STATION
CONC	CONCRETE	MH	MANHOLE	STD	STANDARD
DTL	DETAIL	MJ	MECHANICAL JOINT	STL	STEEL
DIA, ø	DIAMETER	MIN	MINIMUM	T	TANGENT
DWG	DRAWING	MMD	MAXIMUM MARSHAL DENSITY	TC	TOP OF CURB
E	EAST	MAX	MAXIMUM	TELE	TELEPHONE
EA	EACH	N	NORTH	TBC	TOP BACK OF CURB
EC	END CURVE	NIC	NOT IN CONTRACT	TOP	TOP OF PIPE
ELEC	ELECTRIC/ELECTRICAL	NTS	NOT TO SCALE	TRAF	TRAFFIC
EL, ELEV	ELEVATION	OC	ON CENTER	TRANS	TRANSFORMER
EP	EDGE OF PAVEMENT	OD	OUTSIDE DIAMETER	TYP	TYPICAL
EX, EXIST	EXISTING	PC	POINT OF CURVATURE	UG	UNDERGROUND
FG	FINISH GRADE	PCC	PORTLAND CEMENT CONCRETE	VC	VERTICAL CURVE
FL	FLOWLINE	PIP	PROTECT IN PLACE	VG	VALLEY GUTTER
FF	FINISH FLOOR	PL	PROPERTY LINE	VERT	VERTICAL
F/O	FIBER OPTIC	PT	POINT	W	WEST, WATER
G	GAS	PVC	POLYVINYL CHLORIDE	W/	WITH
GALV	GALVANIZED	PVI	POINT OF VERTICAL INTERSECTION	W/O	WITHOUT
		PVM'T	PAVEMENT	WV	WATER VALVE

STORMWATER PROTECTION NOTES:

1. PRIOR TO ANY CONSTRUCTION ACTIVITY, THE CONTRACTOR SHALL INSTALL AND MAINTAIN ALL STORM WATER PROTECTION DEVICES IN ACCORDANCE WITH THE "NEVADA CONTRACTORS FIELD GUIDE FOR CONSTRUCTION SITE BEST MANAGEMENT PRACTICES" AND DETAILS AS SHOWN.
2. ALL INSTALLED PROTECTION DEVICES SHALL BE INSPECTED AND APPROVED BY THE CARSON CITY CONSTRUCTION INSPECTOR PRIOR TO ANY CONSTRUCTION ACTIVITY.
3. BMP'S IN ADDITION TO THOSE INDICATED ON PLAN SHEETS, AND THE CONTRACTOR'S SWPPP MAY BE REQUIRED IF THEY DON'T MEET LOCAL PERFORMANCE STANDARDS.
4. ALL BMPs MUST BE INSPECTED WEEKLY, PRIOR TO FORECASTED RAIN EVENTS, AND WITHIN 24 HOURS AFTER ANY EVENT THAT CREATES RUNOFF AT THE SITE.
5. ACCUMULATED SEDIMENT MUST BE REMOVED FROM BMPs WHEN THE DESIGN CAPACITY HAS BEEN REDUCED BY 50 PERCENT OR MORE. SEDIMENT MUST ALSO BE REMOVED WITHIN SEVEN DAYS AFTER A RUNOFF EVENT OR PRIOR TO THE NEXT FORECASTED RAIN EVENT WHICHEVER IS EARLIER.
6. CONTRACTOR SHALL INSPECT LOCAL ROADS ADJACENT TO THE SITE DAILY, SWEEP OR VACUUM TO REMOVE ANY VISIBLE ACCUMULATED SEDIMENT.
7. ANY SEDIMENT THAT IS TRACKED ONTO PAVEMENT SHALL BE REMOVED BY SHOVELING, STREET SWEEPING OR VACUUMING. THE SEDIMENT COLLECTED BY SWEEPING SHALL BE REMOVED OR STABILIZED ON SITE. THE PAVEMENT SHALL NOT BE CLEANED BY WASHING DOWN THE STREET, EXCEPT WHEN SWEEPING IS INEFFECTIVE AND THERE IS A THREAT TO PUBLIC SAFETY. IF IT IS NECESSARY TO WASH THE STREETS, THE CONSTRUCTION OF A SMALL SUMP SHALL BE CONSIDERED. THE SEDIMENT WOULD THEN BE WASHED INTO THE SUMP WHERE IT CAN BE CONTROLLED
8. CONTRACTOR SHALL BE RESPONSIBLE FOR MAINTAINING DUST CONTROL WITHIN THE CONSTRUCTION LIMITS AT ALL TIMES.
9. STORM DRAIN INLET PROTECTION SHALL BE PLACED ACCORDINGLY ON THE NEAREST INLETS DOWNSTREAM OF ALL CONSTRUCTION ACTIVITIES PER STANDARD DRAWING C-4.1.7.
10. THE CONTRACTOR OR HIS QUALIFIED AGENT IS REQUIRED TO ROUTINELY INSPECT ALL AREAS OF DISTURBED AND BARE SOIL, AREAS USED FOR STORAGE OF MATERIALS AND EQUIPMENT THAT ARE EXPOSED TO PRECIPITATION, ONSITE VEHICLE ENTRANCE AND EXIT LOCATIONS AND ALL ONSITE EROSION AND SEDIMENT CONTROL BMPS.

BASIS OF BEARINGS

FOUND CENTERLINE MONUMENT (HV-1) AT CENTERLINE INTERSECTION OF DESATOYA DR AND LADERA DR AND FOUND CENTERLINE MONUMENT (HV-2) AT CENTERLINE INTERSECTION OF DESATOYA DR AND SISKIYOU DR WITH A LINE BETWEEN SAID POINTS HAVING A BEARING OF N 88°55'44" W AND DISTANCE OF 1569.90'.

BASIS OF ELEVATIONS

FOUND CENTERLINE MONUMENT (HV-1) AT CENTERLINE INTERSECTION OF DESATOYA DR AND LADERA DR

ELEVATION = 4734.44'

PROJECT LOCATION

SECTION 15 & 16 OF T 15 N, R 20 E M.D.B.& M.

HORIZONTAL & VERTICAL CONTROL POINT DATA

POINT	NORTHING	EASTING	ELEVATION	DESCRIPTION / LOCATION
HV-1	1610985.68	176280.10	4634.44	CENTER LINE MONUMENT, INTX DESATOYA DR & LADERA DR
HV-2	1611015.03	174710.47	4627.07	CENTER LINE MONUMENT, INTX DESATOYA DR & SISKIYOU DR

DESIGNED BY: BD
DRAWN BY: BD
CHECKED BY: DR
DWG NO.: 5-1202ss
SCALE (HORIZ): 1"=100'
SCALE (VERT): N/A
PLOT DATE: 2013 MAY 01

CARSON CITY
PUBLIC WORKS DEPARTMENT
3505 BUTTI WAY CARSON CITY, NEVADA 89701
PH: 887-2355 FAX: 887-2112

PROFESSIONAL ENGINEER - STATE OF NEVADA
JEFFERY A. SHARP
Exp: 6/30/14
CIVIL
No.017677

REV.	DATE	DESCRIPTION	BY	APP'D

EAST FIFTH STREET
SEWER REHABILITATION
PROJECT No. 5.1202

INDEX SHEET
& STORMWATER PROTECTION

SHEET 2 OF 7

H:\PROJECTS\5.1202 5th Street SS Rehab\dwg\5-1202ss.DWG; MON, 4/29/2013 9:09:22 AM, kelvyn

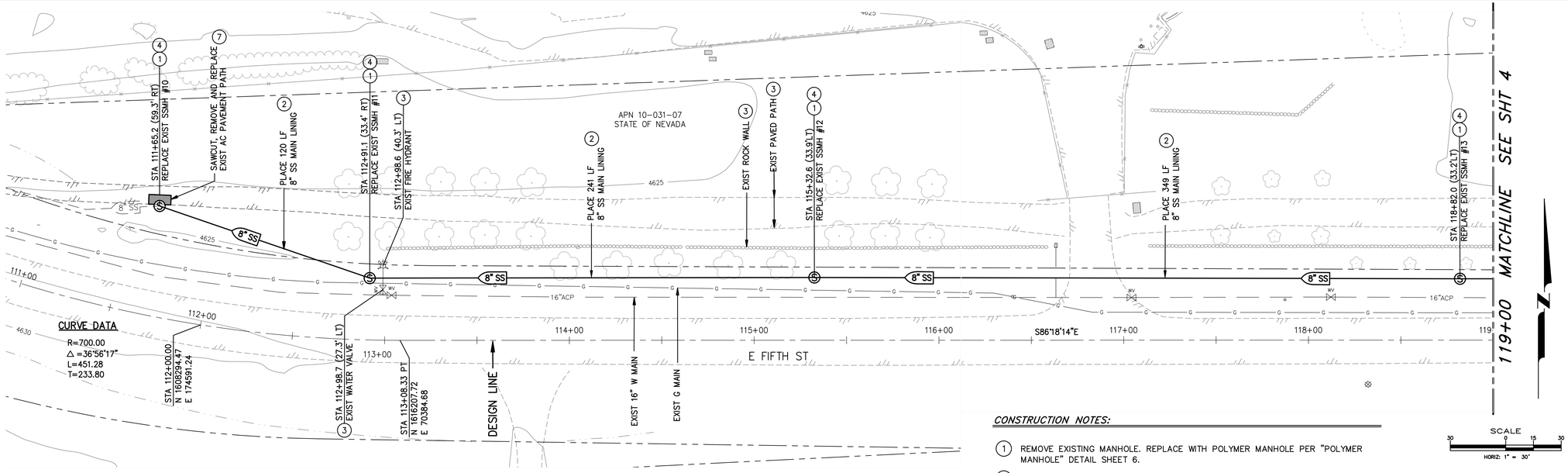

PLAN – E. FIFTH STREET

SCALE: 1" = 30' HORIZ.

NOTES:

1. PEAK FLOW IN E. FIFTH STREET 8" SEWER MAIN IS ESTIMATED BETWEEN 225 – 275 GPM. CONTRACTOR TO VERIFY PRIOR TO CONSTRUCTION.
2. CONTRACTOR TO NOTIFY TODD MITCHELL AT 721-0372 48 HOURS PRIOR TO CONSTRUCTION.
3. POTHOLE EXISTING UTILITIES PRIOR TO EXCAVATION.

CONSTRUCTION NOTES:

1. REMOVE EXISTING MANHOLE. REPLACE WITH POLYMER MANHOLE PER "POLYMER MANHOLE" DETAIL SHEET 6.
2. INSTALL TRENCHLESS LINER SYSTEM INSIDE EXISTING 8" CONCRETE SEWER MAIN PER MANUFACTURER'S RECOMMENDATION.
3. PROTECT IN PLACE.
4. INSTALL CARSONITE MARKER PER "MANHOLE NOTES" SHEET 6.
5. SAWCUT, REMOVE AND REPLACE EXISTING TYPE "A" SIDEWALK PER DETAIL C-5.2.2.
6. SAWCUT, REMOVE AND REPLACE EXISTING CURB RAMP PER DETAIL C-5.3.3.
7. SAWCUT REMOVE AND REPLACE EXISTING AC PAVEMENT PATH PER DETAIL C-5.1.6.

Call before you Dig
Avoid cutting underground utility lines. It's easily.
Call 811
OR
1-800-227-2600

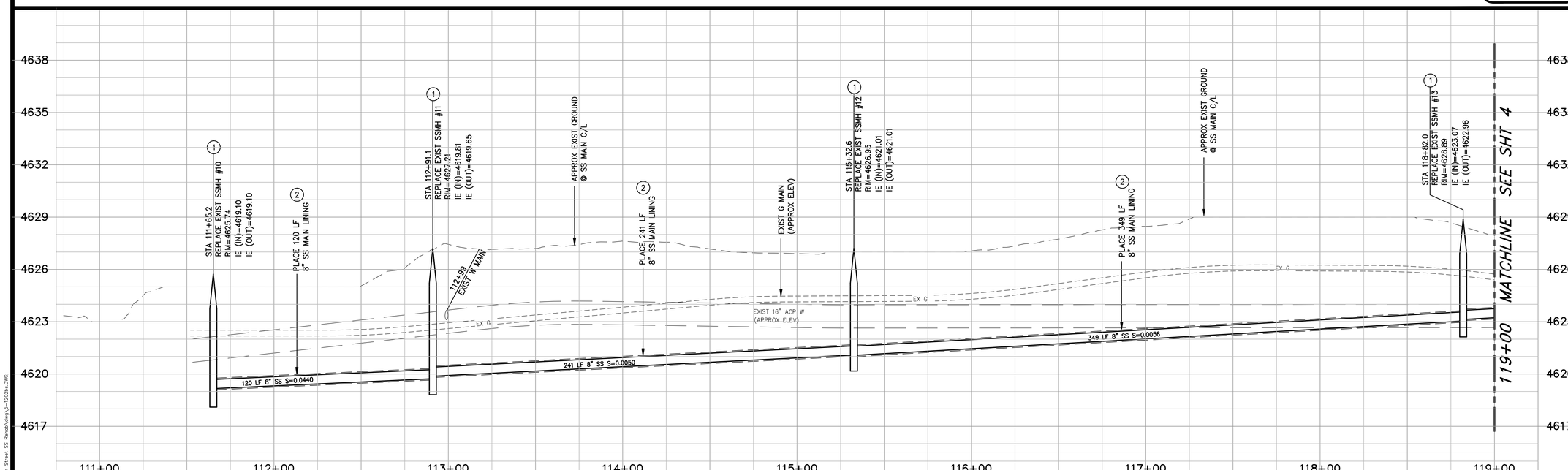

PROFILE – E. FIFTH STREET

SCALE: 1" = 30' HORIZ.
1" = 3' VERT.

DESIGNED BY: BD
DRAWN BY: BD
CHECKED BY: DR
DWG NO.: 5-1202bs
SCALE (HORIZ): 1"=30'
SCALE (VERT): 1"=3'
PLOT DATE: 2013 MAY 01

CARSON CITY
PUBLIC WORKS DEPARTMENT
3505 BUTTI WAY CARSON CITY, NEVADA 89701
PH: 887-2355 FAX: 887-2112

PROFESSIONAL ENGINEER – STATE OF NEVADA
JEFFERY A. SHARP
Exp: 6/30/14
CIVIL
No. 017677

REV.	DATE	DESCRIPTION	BY	APP'D

EAST FIFTH STREET
SEWER REHABILITATION
PROJECT No. 5.1202
E. FIFTH ST.
PLAN & PROFILE
STA 111+00 TO STA 119+00

SHEET 3 OF 7

H:\PROJECTS\5.1202 5th Street SS Rehab\dwg\5-1202bs.DWG, pp-3, 5/21/2013 9:09:30 AM, bdsyd

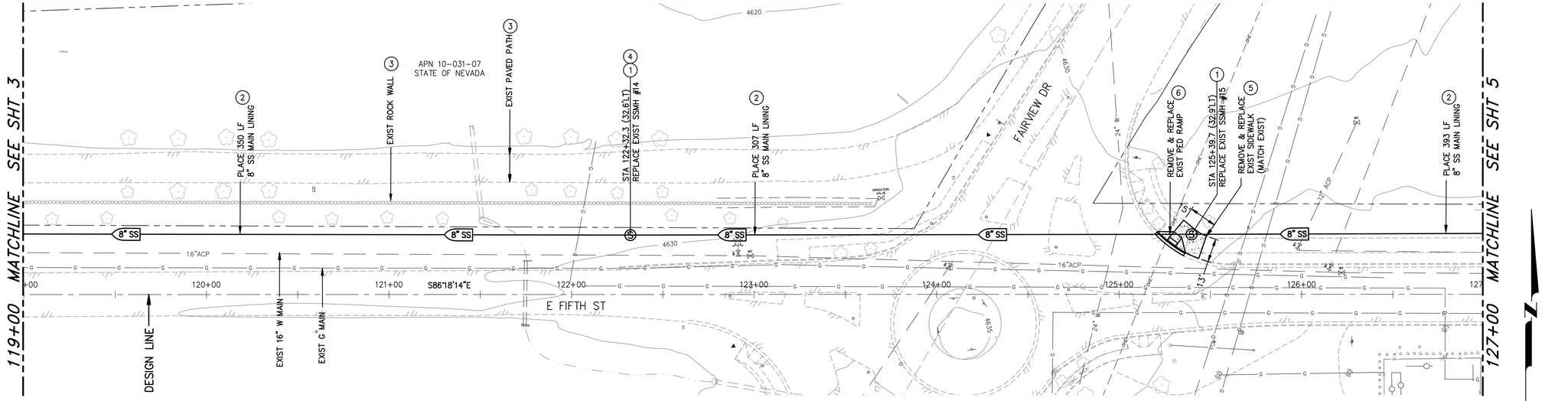

PLAN – E. FIFTH STREET

SCALE: 1" = 30' HORIZ.

NOTES:

1. PEAK FLOW IN E. FIFTH STREET 8" SEWER MAIN IS ESTIMATED BETWEEN 225 – 275 GPM. CONTRACTOR TO VERIFY PRIOR TO CONSTRUCTION.
2. CONTRACTOR TO NOTIFY TODD MITCHELL AT 721-0372 48 HOURS PRIOR TO CONSTRUCTION.
3. POTHOLE EXISTING UTILITIES PRIOR TO EXCAVATION.

CONSTRUCTION NOTES:

1. REMOVE EXISTING MANHOLE. REPLACE WITH POLYMER MANHOLE PER "POLYMER MANHOLE" DETAIL SHEET 6.
2. INSTALL TRENCHLESS LINER SYSTEM INSIDE EXISTING 8" CONCRETE SEWER MAIN PER MANUFACTURER'S RECOMMENDATION.
3. PROTECT IN PLACE.
4. INSTALL CARSONITE MARKER PER "MANHOLE NOTES" SHEET 6.
5. SAWCUT, REMOVE AND REPLACE EXISTING TYPE "A" SIDEWALK PER DETAIL C-5.2.2.
6. SAWCUT, REMOVE AND REPLACE EXISTING CURB RAMP PER DETAIL C-5.3.3.
7. SAWCUT REMOVE AND REPLACE EXISTING AC PAVEMENT PATH PER DETAIL C-5.1.6.

Call before you Dig
Avoid costly underground utility hits. It's easy.
Call 811
OR
1-800-227-2600

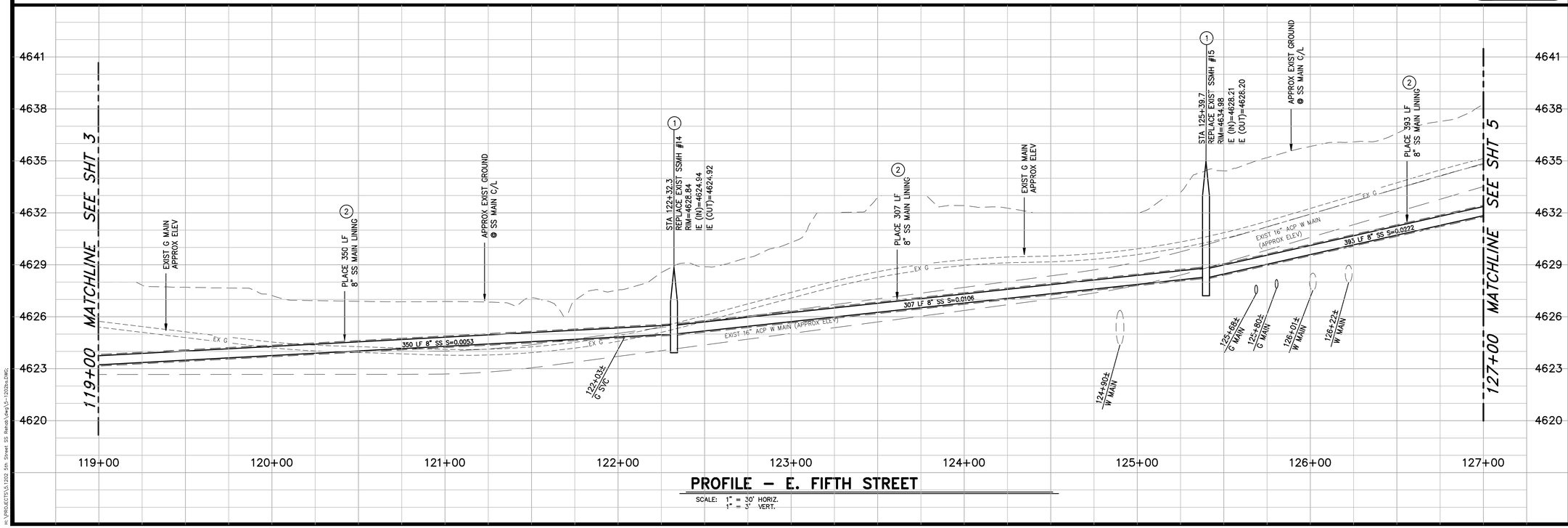

PROFILE – E. FIFTH STREET

SCALE: 1" = 30' HORIZ.
1" = 3' VERT.

DESIGNED BY:	BD
DRAWN BY:	BD
CHECKED BY:	DR
DWG NO.: 5-1202ss	
SCALE (HORIZ):	1"=30'
SCALE (VERT):	1"=3'
PLOT DATE:	2013 MAY 01

CARSON CITY
PUBLIC WORKS DEPARTMENT
3505 BUTTI WAY CARSON CITY, NEVADA 89701
PH: 887-2355 FAX: 887-2112

PROFESSIONAL ENGINEER STATE OF NEVADA
JEFFERY A. SHARP
Exp: 6/30/14
CIVIL
No.017677

REV.	DATE	DESCRIPTION	BY	APP'D

EAST FIFTH STREET SEWER REHABILITATION
PROJECT No. 5.1202
E. FIFTH ST. PLAN & PROFILE
STA 119+00 TO STA 127+00

SHEET 4 OF 7

H:\PROJECTS\5.1202 5th Street SS Rehab\dwg\5-1202ss.DWG, pp=4, 5/31/2013 8:08:35 AM, bdoyd

H:\PROJECTS\5.1202 5th Street SS Rehab\dwg\5-1202ss.DWG,

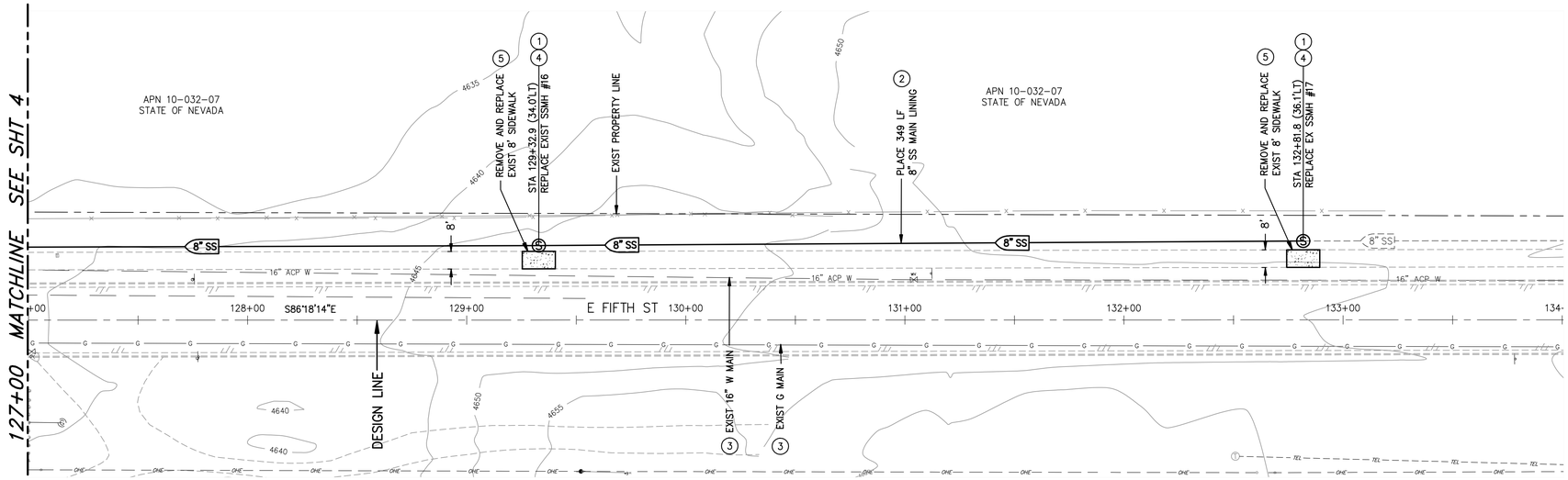

PLAN – E. FIFTH STREET

SCALE: 1" = 30' HORIZ.

NOTES:

1. PEAK FLOW IN E. FIFTH STREET 8" SEWER MAIN IS ESTIMATED BETWEEN 225 – 275 GPM. CONTRACTOR TO VERIFY PRIOR TO CONSTRUCTION.
2. CONTRACTOR TO NOTIFY TODD MITCHELL AT 721-0372 48 HOURS PRIOR TO CONSTRUCTION.
3. POTHOLE EXISTING UTILITIES PRIOR TO EXCAVATION.

CONSTRUCTION NOTES:

1. REMOVE EXISTING MANHOLE. REPLACE WITH POLYMER MANHOLE PER "POLYMER MANHOLE" DETAIL SHEET 6.
2. INSTALL TRENCHLESS LINER SYSTEM INSIDE EXISTING 8" CONCRETE SEWER MAIN PER MANUFACTURER'S RECOMMENDATION.
3. PROTECT IN PLACE.
4. INSTALL CARSONITE MARKER PER "MANHOLE NOTES" SHEET 6.
5. SAWCUT, REMOVE AND REPLACE EXISTING TYPE "A" SIDEWALK PER DETAIL C-5.2.2.
6. SAWCUT, REMOVE AND REPLACE EXISTING CURB RAMP PER DETAIL C-5.3.3.
7. SAWCUT REMOVE AND REPLACE EXISTING AC PAVEMENT PATH PER DETAIL C-5.1.6.

Call before you Dig
Avoid cutting underground utility lines. It's easily.
Call 811
OR
1-800-227-2600

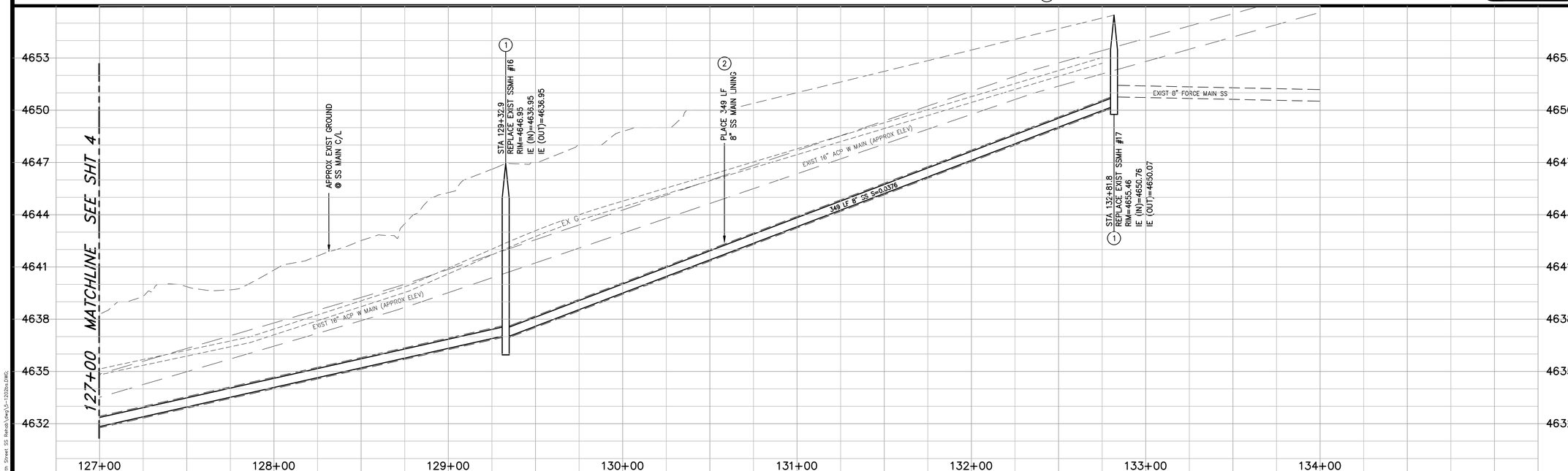

PROFILE – E. FIFTH STREET

SCALE: 1" = 30' HORIZ.
1" = 3' VERT.

DESIGNED BY: BD
DRAWN BY: BD
CHECKED BY: DR
DWG NO.: 5-1202bs
SCALE (HORIZ): 1"=30'
SCALE (VERT): 1"=3'
PLOT DATE: 2013 MAY 01

CARSON CITY
PUBLIC WORKS DEPARTMENT
3505 BUTTI WAY CARSON CITY, NEVADA 89701
PH: 887-2355 FAX: 887-2112

PROFESSIONAL ENGINEER – STATE OF NEVADA
JEFFERY A. SHARP
Exp: 6/30/14
CIVIL
No.017677

REV.	DATE	DESCRIPTION	BY	APP'D

EAST FIFTH STREET
SEWER REHABILITATION
PROJECT No. 5.1202
E. FIFTH ST.
PLAN & PROFILE
STA 127+00 TO STA 134+00

SHEET 5 OF 7

H:\PROJECTS\5.1202 5th Street SS Rehab\dwg\5-1202bs.DWG, pp-5, 5/21/2013 9:09:40 AM, bdsyst

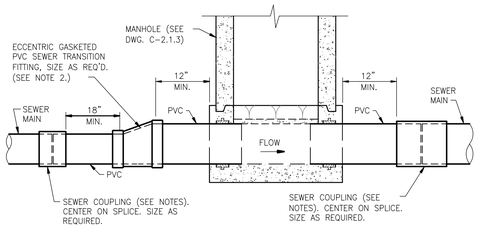

TYPICAL SEWER LINE & MANHOLE TRANSITION
NTS

NOTES:

1. SEWER COUPLINGS SHALL BE USED AT LOCATIONS WHERE TWO PIPES OF EQUAL NOMINAL SIZE AND EQUAL OR DIFFERENT DIAMETERS ARE BEING JOINED. (ie. 8 INCH SDR PVC TO 8 INCH SDR PVC, OR 8 INCH PVC TO 8 INCH CLAY.)
2. ECCENTRIC GASKETED PVC SEWER TRANSITION FITTINGS SHALL BE USED AT ALL LOCATIONS WHERE TWO PIPES OF UNEQUAL NOMINAL SIZES ARE TO BE JOINED. (ie. 6 INCH PIPE TO 8 INCH PIPE)
3. GASKETED PVC SEWER FITTINGS, SEWER CLAMP COUPLINGS OR SEWER STRAIGHT COUPLINGS SHALL BE USED AT LOCATIONS WHERE TWO PIPES OF EQUAL SIZE AND DIAMETER ARE BEING JOINED. (ie. 8 INCH SDR PVC TO 8 INCH SDR PVC, 8 INCH C900 PVC TO 8 INCH C900 PVC)
4. SEWER TRANSITION COUPLINGS SHALL BE USED AT LOCATIONS WHERE TWO PIPES OF EQUAL NOMINAL SIZE AND UNEQUAL DIAMETER ARE BEING JOINED. (ie. 8 INCH SDR PVC TO 8 INCH CLAY, 8 INCH SDR PVC TO 8 INCH C900 PVC) ECCENTRIC COUPLINGS WHICH MATCH PIPE INVERTS SHALL BE USED AT LOCATIONS WHERE THE EXISTING DOWNSTREAM PIPE INNER DIAMETER IS LESS THAN THE UPSTREAM PIPE INNER DIAMETER.
5. SEWER CLAMP COUPLING BODY AND CLAMP BOLTS, WASHERS & NUTS SHALL BE 304 STAINLESS STEEL, CLAMP COUPLING LENGTH SHALL BE 12 INCH MINIMUM FOR 8 INCH PIPE AND LARGER, ROMAC STYLE LSS1, LSS2, LSS3 FOR SEWER OR APPROVED EQUAL.
6. SEWER STRAIGHT AND TRANSITION COUPLINGS SHALL BE RIGID TYPE, DUCTILE IRON BODY AND END RINGS WITH HIGH STRENGTH LOW ALLOY STEEL NUTS & BOLTS, ROMAC STYLE 501 FOR SEWER OR APPROVED EQUAL, COAT ALL EXPOSED BARE METAL, NUTS AND BOLTS WITH COLD-APPLIED WATER BASED ENAMEL OR BLACK ASPHALT.
7. ECCENTRIC COUPLINGS FOR MATCHING INVERTS OF NEW PIPE FLOWING INTO EXISTING PIPE SHALL BE ROMAC OR FERNCO ECCENTRIC COUPLINGS OR APPROVED EQUAL. COAT ALL EXPOSED BARE METAL, NUTS AND BOLTS ON ROMAC COUPLINGS WITH COLD-APPLIED WATER BASED ENAMEL OR BLACK ASPHALT.

NO.	REVISION	DATE	STANDARD DETAIL FOR PUBLIC WORKS CONSTRUCTION	SECTION
			SEWER MAIN AND LATERAL TRANSITIONS	CARSON CITY
				DRAWING NO. C-2.1.6 (203,306)
APPROVED BY:		7/09		DATE 7/2009

1. ALL SEWER MAINS AND LATERALS IN THE RIGHT-OF-WAY/EASEMENT SHALL BE PVC SDR35 UNLESS OTHERWISE NOTED.
2. NON-FLEXIBLE TRANSITION COUPLINGS ARE REQUIRED WHEN CONNECTING NEW SEWER LINES TO EXISTING LINES AND/OR FITTINGS, SEE DWG. C-2.1.6.
3. THE CONTRACTOR SHALL INSTALL A PLUG AT THE POINT OF EXTENSION OF A SEWER MAIN PRIOR TO THE START OF CONSTRUCTION. THE PLUG SHALL REMAIN IN PLACE UNTIL ALL LINES HAVE BEEN INSPECTED, TESTED, CLEANED AND FLUSHED. REMOVAL OF THE PLUG BY THE CONTRACTOR PRIOR TO APPROVAL IS A VIOLATION OF THE CARSON CITY MUNICIPAL CODE AND MAY RESULT IN FINES UP TO $1,000 A DAY.
4. SEWER LINES SHALL BE TESTED PER SECTION 336.03.07 OF THE SSPWC AS ADOPTED BY CARSON CITY. AN AIR PRESSURE TEST PER SECTION 336.03.07.04 AND A DEFLECTION TEST PER SECTION 336.03.09 OF THE CARSON CITY AMENDMENT TO THE SSPWC SHALL BE PERFORMED ON ALL SEWER LINES.
5. MARKING TAPE SHALL BE INSTALLED 12 INCHES ABOVE ALL SEWER MAINS AND LATERALS. TAPE WIDTH SHALL BE 3 INCHES; THICKNESS SHALL BE FOUR 4 MIL OR GREATER AND SHALL BE GREEN AND BEAR LARGE PRINTING DENOTING "CAUTION BURIED SEWER LINE BELOW" OR EQUIVALENT WORDING.
6. TRACER WIRE SHALL BE ATTACHED TO ANY SEWER LATERAL WHICH IS NOT PERPENDICULAR TO THE SEWER MAIN. SEE DWG C-2.2.1

NO.	REVISION	DATE	STANDARD DETAIL FOR PUBLIC WORKS CONSTRUCTION	SECTION
			SEWER GENERAL NOTES	CARSON CITY
				DRAWING NO. C-2.1.1 (204, 306, 323)
APPROVED BY:		07/09		DATE 7/2009

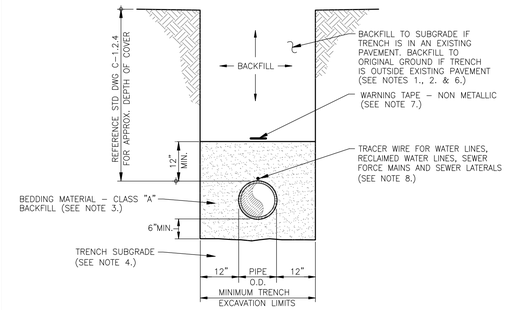

TYPICAL TRENCH SECTION
NTS

NOTES:

1. WATER DENSIFIED BACKFILL AND TUNNELING SHALL BE BY SPECIAL PROVISION ONLY.
2. BACKFILL SHALL CONFORM TO THE REQUIREMENTS OF CLASS E BACKFILL AS SPECIFIED IN SUBSECTION 200.03.06 OF THE SSPWC. MATERIAL SHALL BE PLACED IN LIFT THICKNESS SPECIFIED IN SUBSECTION 305.10 OF THE SSPWC AND DENSIFIED TO 90% RELATIVE COMPACTION.
3. BEDDING SHALL CONFORM TO THE REQUIREMENTS OF CLASS A BACKFILL AS SPECIFIED IN SUBSECTION 200.03.02 OF THE SSPWC. MATERIAL SHALL BE DENSIFIED TO 90% RELATIVE COMPACTION.
4. PLANS SHALL INCLUDE A DETAIL FOR SUBGRADE STABILIZATION INCLUDING BACKFILL MATERIAL, STRUCTURAL GEOTEXTILE FILTER FABRIC AND MODIFIED CUTOFF COLLARS WHEN POTENTIAL FOR UNSTABLE SUBGRADES EXIST, SUBJECT TO THE APPROVAL OF THE CARSON CITY ENGINEER OR PUBLIC WORKS DIRECTOR.
5. FOR TRENCHES IN ROADWAY SECTION, SEE PAVEMENT PATCH DETAIL (DWG. No. C-5.1.6).
6. FOR THE PURPOSE OF PAYMENT; EXCAVATION AND BACKFILL QUANTITIES ARE BASED ON THESE STANDARD DRAWINGS, AND NO ADDITIONAL COMPENSATION WILL BE MADE. SHORING OR SLOPED CUT SLOPES MAY BE NECESSARY, BUT THERE WILL BE NO ADDITIONAL PAYMENT. ALL EXCAVATIONS SHALL CONFORM TO THE LATEST O.S.H.A. REQUIREMENTS.
7. PLACE NON METALLIC WARNING TAPE 1 FOOT ABOVE ALL BURIED PIPES AND CONDUITS.
8. TRACER WIRE SHALL BE 12 GAUGE (MINIMUM THICKNESS) INSULATED SOLID COPPER OR COPPER-CLAD STEEL CORE WIRE. INSULATION SHALL BE 30 MIL HDPE. PLANS SHALL SPECIFY WIRE STRENGTH AND INSULATION THICKNESS FOR BORING APPLICATIONS. SPLICES SHALL BE CONNECTED BY WIRE NUTS, SEALED WITH AQUA SEAL OR SILICON FILLED, AND DOUBLE WRAPPED WITH U/L LISTED ELECTRICAL TAPE. TRACER WIRE COLOR SHALL BE, BLUE FOR WATER, PURPLE FOR RECLAIMED WATER, AND GREEN FOR SEWER.

NO.	REVISION	DATE	STANDARD DETAIL FOR PUBLIC WORKS CONSTRUCTION	SECTION
			TRENCH EXCAVATION AND BACKFILL	CARSON CITY
				DRAWING NO. C-2.2.1 (305)
APPROVED BY:		7/09		DATE 7/2009

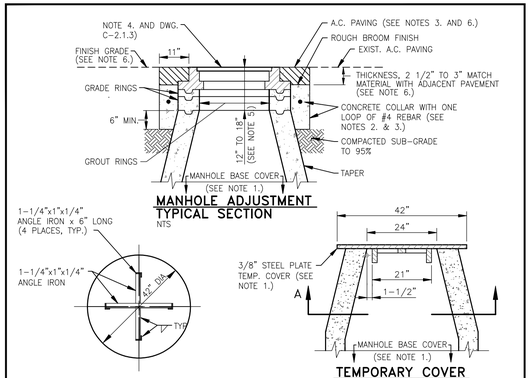

MANHOLE ADJUSTMENT TYPICAL SECTION
NTS

SECTION A–A
NTS

TEMPORARY COVER TYPICAL SECTION
NTS

NOTES:

1. INSTALL TEMPORARY COVER WITH CONE INSTALLATION WHEN INSTALLING NEW MANHOLE OR PRIOR TO REMOVING EXISTING FRAME & COVER AND GRADE RINGS TO ADJUST TO FINISH GRADE. INSTALL COVER OVER MANHOLE BASE TO PREVENT DEBRIS FROM ENTERING SEWER SYSTEM. THE MANHOLE BASE COVER SHALL BE IN PLACE PRIOR TO PERFORMING ANY ADJUSTMENTS OR GROUTING AND SHALL REMAIN IN PLACE WHILE ADJUSTMENTS OR GROUTING ARE BEING PERFORMED. REMOVE BASE COVER UPON ADJUSTMENT APPROVAL BY CARSON CITY.
2. CONCRETE SHALL CONFORM TO THE SSPWC SECTION 202.01.12. REBAR SHALL BE USED ONLY WHEN THE MANHOLE IS LOCATED OUTSIDE PAVED AREAS.
3. THE CONCRETE COLLAR SHALL BE LEFT 2 1/2 INCHES TO 3 INCHES BELOW FINISHED ASPHALT SURFACE. APPLY AN APPROVED TACK COAT (CONFORMING TO THE SSPWC SECTION 316) AND FILL VOID BETWEEN ADJACENT PAVEMENT AND FRAME WITH TYPE 3 AC 20 PAVING (CONFORMING TO THE SSPWC SECTION 320). APPLY FOG SEAL (CONFORMING TO SSPWC SECTION 317) TO THE ASPHALT SURFACE. ALL CUTS IN PAVING SHALL BE STRAIGHT AND EVEN. EXCEPTION: WHEN STRUCTURE NOT LOCATED IN ASPHALT PAVEMENT OR LOCATED IN AN UNPAVED AREA, EXTEND CONCRETE TO FINISH GRADE.
4. INSTALL NEW FRAME & COVER UNLESS OTHERWISE SHOWN ON THE PLANS OR SPECIAL CONDITIONS. FRAME & COVER SHALL BE SET FLUSH WITH FINISH GRADE UNLESS OTHERWISE NOTED.
5. FOR NEW MANHOLE INSTALLATIONS, DISTANCE FROM COVER TO CONE SHALL BE 12 INCHES MINIMUM AND 15 INCHES MAXIMUM FOR MINOR RESIDENTIAL STREETS AND 15 INCHES MINIMUM AND 18 INCHES MAXIMUM FOR ALL OTHER STREETS. FOR ADJUSTING EXISTING FRAME & COVERS THE DISTANCE FROM COVER TO CONE SHALL NOT EXCEED 18 INCHES.
6. ~~WHEN LOCATED IN NDOT RIGHT-OF-WAY, CONCRETE COLLAR SHALL CONFORM TO NDOT STANDARD PLAN SHT R-4.7.3 AND STANDARD SPECIFICATION 609.~~

NO.	REVISION	DATE	STANDARD DETAIL FOR PUBLIC WORKS CONSTRUCTION	SECTION
1	NOTE 6	4/9	**MANHOLE FRAME & COVER ADJUSTMENT (REVISED)**	CARSON CITY
				DRAWING NO. C-2.1.5 (204, 323)
APPROVED BY:		7/09		DATE 7/2009

1. ALL WORK SHALL CONFORM TO THE "STANDARD SPECIFICATIONS FOR PUBLIC WORKS CONSTRUCTION" (SSPWC) AND THE "STANDARD DETAILS FOR PUBLIC WORKS CONSTRUCTION" (SDPWC) AS ADOPTED BY CARSON CITY. THE CONTRACTOR SHALL OBTAIN A PERMIT FOR PUBLIC WORKS CONSTRUCTION FROM THE CARSON CITY PERMIT CENTER PRIOR TO THE START OF CONSTRUCTION.
2. ALL TRAFFIC CONTROL AND BARRICADING WITHIN THE CARSON CITY RIGHT-OF-WAY SHALL CONFORM TO SECTION 100.33, 332.04 AND 332.05 OF THE STANDARD SPECIFICATIONS, PART VI OF THE MANUAL ON UNIFORM TRAFFIC CONTROL DEVICES, LATEST EDITION, AND THE UNR T2 CENTER, TEMPORARY TRAFFIC CONTROL GUIDELINES LATEST EDITION. A TRAFFIC CONTROL PLAN MUST BE SUBMITTED AND APPROVED BY THE CARSON CITY ENGINEERING DIVISION PRIOR TO ANY STREET CLOSURES.
3. THE CONTRACTOR SHALL CALL UNDERGROUND SERVICE ALERT "CALL BEFORE YOU DIG" (811) OR (1-800-227-2600) AT LEAST TWO (2) WORKING DAYS PRIOR TO START OF CONSTRUCTION AND COMPLY WITH THE REQUIREMENTS OF NRS AND NAC 455 THROUGHOUT THE COURSE OF THE WORK. SEWER SERVICE LATERALS ARE NOT OWNED OR MARKED BY CARSON CITY.
4. THE CONTRACTOR SHALL CALL THE CARSON CITY ENGINEERING DIVISION (887-2300) TWO (2) WORKING DAYS PRIOR TO THE START OF CONSTRUCTION. THE CONTRACTOR SHALL CALL ONE (1) WORKING DAY PRIOR TO REQUIRED INSPECTIONS AND TESTING. THE REQUIRED INSPECTIONS AND TESTING ARE LISTED ON THE INSPECTION RECORD ISSUED WITH EACH PERMIT. THE CONTRACTOR MUST HAVE THE PERMIT NUMBER AND THE DESCRIPTION LISTED ON THE INSPECTION RECORD TO SCHEDULE REQUIRED INSPECTIONS AND TESTING. FOR CITY CONTRACTED PROJECTS, THE CONTRACTOR SHALL SCHEDULE INSPECTIONS PER THE CONTRACT DOCUMENTS.
5. FINAL INSPECTIONS WILL BE PERFORMED BY CARSON CITY ENGINEERING DIVISION ACCORDING TO THE CARSON CITY INSPECTIONS AND TESTING PROCEDURES. NOTE: THESE PROCEDURES REQUIRE SUBMITTAL OF RECORD DRAWING PRINTS BY THE CONTRACTOR AND 10 WORKING DAYS TO PREPARE A FINAL PUNCH LIST. ALL CONDITIONS OF THE FINAL INSPECTION MUST BE COMPLETED PRIOR TO FINAL ACCEPTANCE OR ANY APPROVAL OF A CERTIFICATE OF OCCUPANCY BY THE CARSON CITY ENGINEERING DIVISION.
6. MODIFICATIONS TO THE APPROVED PLANS REQUIRES REVIEW AND APPROVAL BY THE CARSON CITY ENGINEERING DIVISION. WORK PERFORMED WITHOUT WRITTEN APPROVAL BY CARSON CITY ENGINEERING WILL REQUIRE REMOVAL AT THE CONTRACTORS EXPENSE.
7. THE APPROVED PLAN, PERMIT AND INSPECTION RECORD MUST BE ON THE JOB SITE AT ALL TIMES.
8. PLAN APPROVAL FOR SEWER AND WATER CONSTRUCTION SHALL EXPIRE ONE YEAR FROM DATE OF APPROVAL UNLESS CONSTRUCTION HAS BEEN INITIATED. (CCMC 12.06.180F, 12.01.140D)
9. THE CONTRACTOR WILL BE SOLELY AND COMPLETELY RESPONSIBLE FOR ACQUIRING A STORMWATER DISCHARGE PERMIT FROM THE NEVADA DIVISION OF ENVIRONMENTAL PROTECTION (NDEP) INCLUDING DEVELOPING, SUBMITTING AND IMPLEMENTING A STORM WATER POLLUTION PREVENTION PLAN (SWPPP). THE CONTRACTOR SHALL DEVELOP, PLACE AND MAINTAIN STORM WATER PROTECTION DEVICES IN COMPLIANCE WITH THE NEVADA CONTRACTORS FIELD GUIDE FOR CONSTRUCTION SITE BEST MANAGEMENT PRACTICES (JUNE 2008).

NO.	REVISION	DATE	STANDARD DETAIL FOR PUBLIC WORKS CONSTRUCTION	SECTION
			GENERAL NOTES	CARSON CITY
				DRAWING NO. C-1.1.1
APPROVED BY:		7/09		DATE 7/2009

1. MANHOLE BASE(S) SHALL BE PRECAST UNLESS OTHERWISE APPROVED BY CARSON CITY PUBLIC WORKS. NO FIELD MODIFICATIONS TO PRECAST BASES WILL BE ALLOWED. TROUGHS AND BENCHES TO BE CAST IN BASE(S) AT PRECAST FACTORY. BASE CONFIGURATION TO BE INSTALLED AS SHOWN ON THE APPROVED PLANS. NO PLUGGING OR FIELD MODIFYING ALLOWED.
2. ARRANGE MANHOLE SECTION LENGTHS TO FIT DEPTH. ALL SHIMS TO BE REMOVED AND VOIDS SEALED.
3. MANHOLE BACKFILL SHALL BE CLASS C OR D BACKFILL AS SPECIFIED IN SECTION 305 OF THE STANDARD SPECIFICATIONS.
4. NO SEWER LINE PIPE WITH A DIAMETER OF LESS THAN 8 INCHES SHALL BE CONNECTED TO A MANHOLE WITHOUT THE APPROVAL OF THE CITY ENGINEER OR PUBLIC WORKS DIRECTOR.
5. MATCH PIPE INVERTS TO MANHOLE INVERTS WHERE PIPES CONNECT TO MANHOLE BASE.
6. ALL MANHOLES SHALL BE SEALED WATERTIGHT. COVERS SHALL HAVE NO "THRU" HOLES. CLOSED PICK HOLES ONLY: SOUTH BAY FOUNDRY 1900 CPH OR APPROVED EQUAL.
7. PRIOR TO BACKFILLING, ALL MANHOLES SHALL BE VACUUM TESTED PER THE REQUIREMENTS OF ASTM C-1244.
8. NO STEPS, LADDERS OR OTHER CLIMBING DEVICES SHALL BE INSTALLED IN MANHOLES.
9. SEWER MANHOLES SHALL BE VACUUM TESTED PER SECTION 336.03.07.05 OF THE CARSON CITY AMENDMENT TO THE SSPWC, LATEST EDITION.
10. GRAY IRON FRAME AND COVER CASTINGS SHALL CONFORM TO ASTM DESIGNATION A48, CLASS 35B. THE COVER AND FRAME SHALL BE MACHINED SO THAT THE COVER MAY BE ROTATED TO ANY POSITION IN THE FRAME AND MAINTAIN A SATISFACTORY SEAT. MANHOLE FRAMES AND COVERS SHALL BE TRAFFIC RATED 36 INCH CAST IRON FRAME AND COVER NO. A-1032 FOR VENTED APPLICATION OR NO. A-1024 FOR NON-VENTED APPLICATION, BOTH AS PROVIDED BY D&L SUPPLY, PROVO, UTAH, OR APPROVED EQUAL, UNLESS OTHERWISE SPECIFIED IN THE PROJECT DOCUMENTS.
11. MANHOLES LOCATED OUTSIDE PAVED AREAS SHALL REQUIRE ALL WEATHER ACCESS ROADWAY CONSISTING OF 6 INCH TYPE 2, CLASS B AGGREGATE BASE (CONFORMING TO THE SSPWC SECTION 200.01.02) AND SEWER MANHOLE MARKERS SHALL BE INSTALLED. SEWER MANHOLE MARKERS SHALL BE GREEN CARSONITE UTILITY MARKER (CUM 375), 5 FEET-2 INCHES (5'-2") WITH MANHOLE DECAL (668-MH) OR APPROVED EQUAL. PLACE MARKERS ON EASEMENT LINE NEAREST TO MANHOLE OR AS DIRECTED BY THE CARSON CITY ENGINEER OR PUBLIC WORKS DIRECTOR.

SEWER MANHOLE NOTES

DATE 1/24/2013

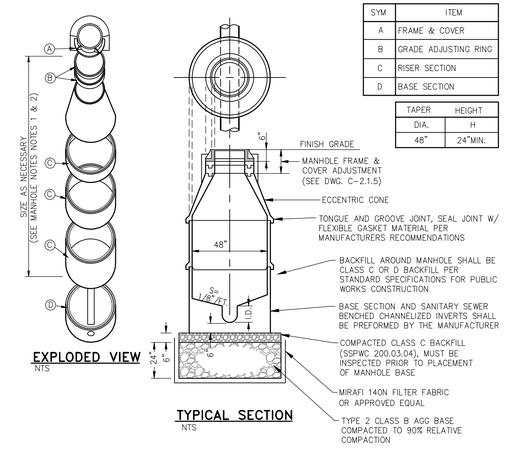

POLYMER MANHOLE

DATE 1/24/2013

DESIGNED BY: BD
DRAWN BY: BD
CHECKED BY: DR
DWG NO.: 5-1202ss
SCALE (HORIZ): N/A
SCALE (VERT): N/A
PLOT DATE: 2013 MAY 01

CARSON CITY
PUBLIC WORKS DEPARTMENT
3505 BUTTI WAY CARSON CITY, NEVADA 89701
PH: 887-2355 FAX: 887-2112

PROFESSIONAL ENGINEER STATE OF NEVADA
JEFFERY A. SHARP
Exp: 6/30/14
CIVIL
No.017677

REV.	DATE	DESCRIPTION	BY	APP'D

EAST FIFTH STREET
SEWER REHABILITATION
PROJECT No. 5.1202

DETAILS

SHEET 6 OF 7

H:\PROJECTS\5.1202 5th Street SS Rehab\dwg\5-1202ss.DWG, DTI-6, 5/21/2013 8:08:43 AM, bshipp

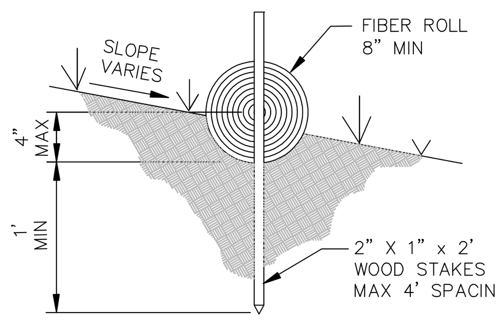

ENTRENCHING DETAIL
NO SCALE

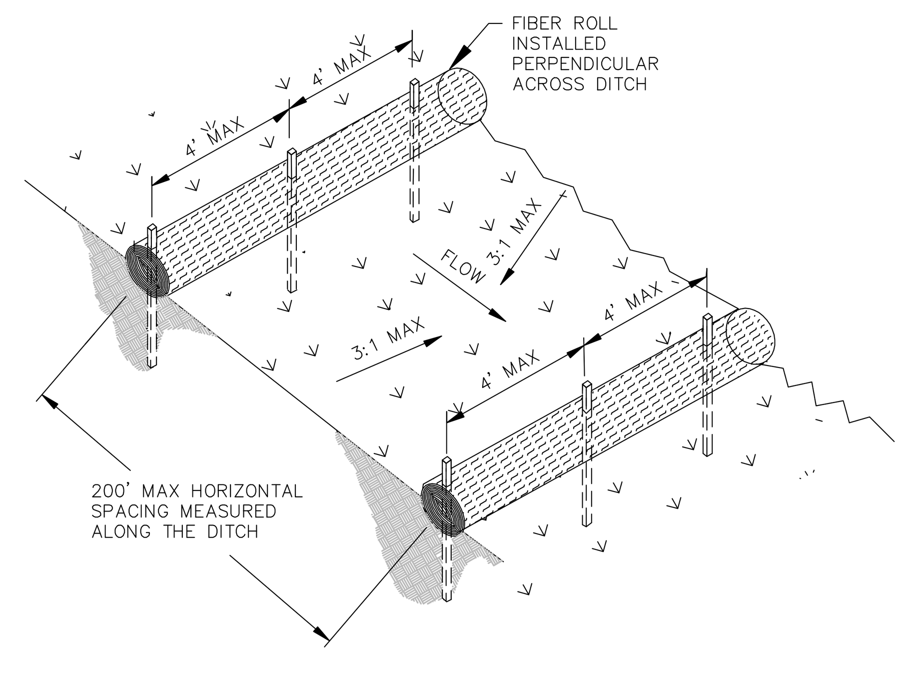

FIBER ROLL CHECK DAM ACROSS DRAINAGE DITCH
NO SCALE

TYPICAL FIBER ROLL INSTALLATION (1/7)
NO SCALE

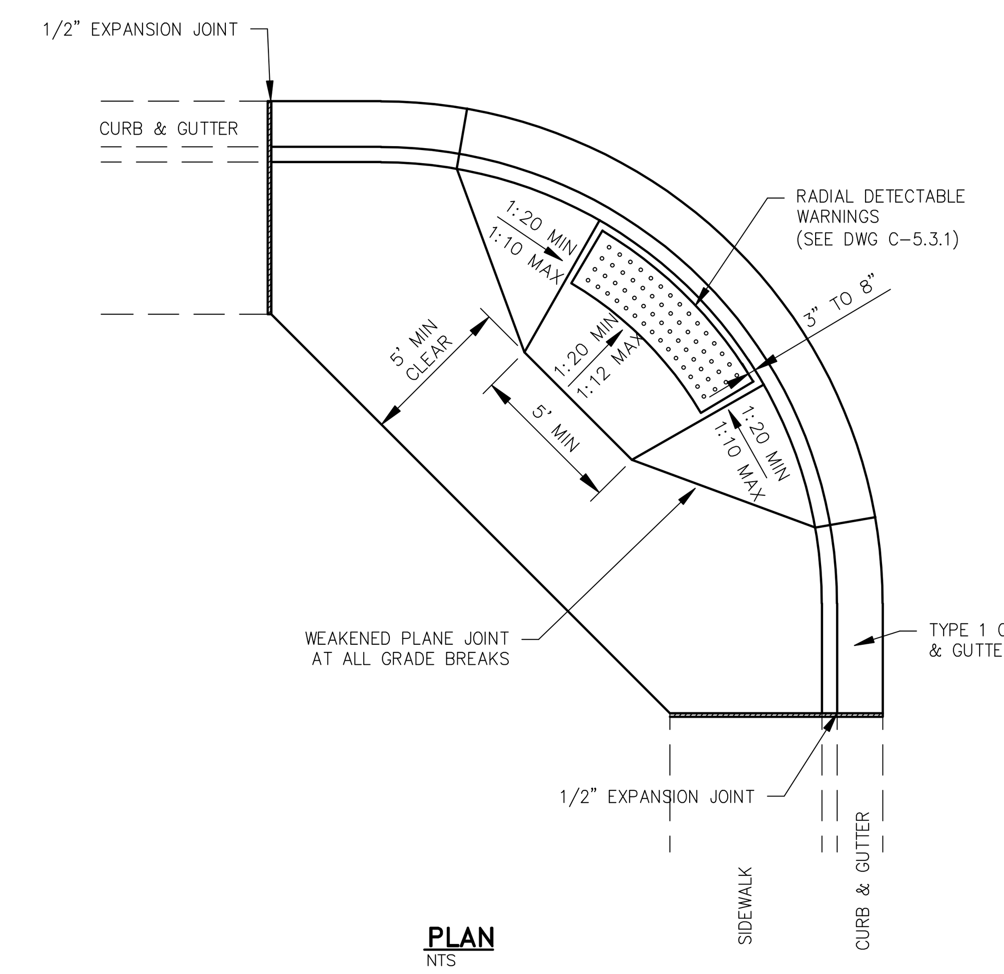

PLAN
NTS

NOTES:

1. SEE "CURB RAMP GENERAL NOTES" DWG C-5.3.1 FOR FURTHER REQUIREMENTS.

NO.	REVISION	DATE	STANDARD DETAIL FOR PUBLIC WORKS CONSTRUCTION	SECTION CARSON CITY
			PERPENDICULAR CURB RAMP APEX	DRAWING NO. C-5.3.3
APPROVED BY:		7/09		DATE 7/2009

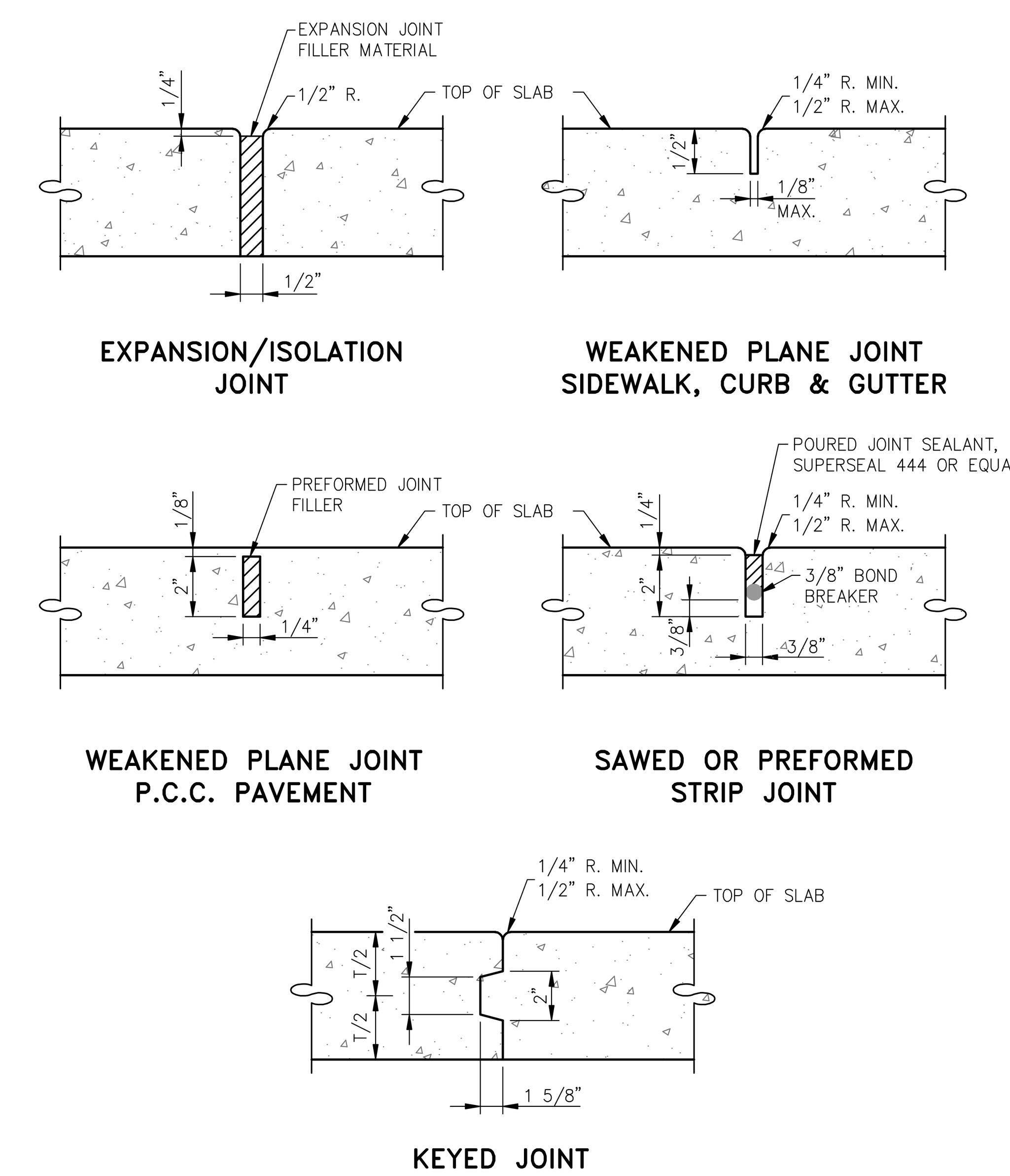

NOTES:

1. ALL CONCRETE EDGING AND JOINTING SHALL CONFORM TO SECTION 312.09 OF THE STANDARD SPECIFICATIONS FOR PUBLIC WORKS CONSTRUCTION (SSPWC).

NO.	REVISION	DATE	STANDARD DETAIL FOR PUBLIC WORKS CONSTRUCTION	SECTION CARSON CITY
			P.C.C. JOINTING DETAILS	DRAWING NO. C-5.1.1 (312)
APPROVED BY:		7/09		DATE 7/2009

1. NO CONCRETE SHALL BE PLACED UNTIL FORMS AND SUBGRADE ARE INSPECTED BY CARSON CITY ENGINEERING DIVISION.
2. PORTLAND CEMENT CONCRETE (P.C.C.) SHALL HAVE THE FOLLOWING CHARACTERISTICS: SYNTHETIC FIBER–REINFORCEMENT (AT A MINIMUM OF 1 POUND PER CUBIC YARD), 4000 PSI MIN COMPRESSIVE STRENGTH @ 28 DAYS, MIN 6 SACKS OF CEMENT PER CUBIC YARDS WITH A MAX. WATER/CEMENT RATIO OF 0.45, AIR ENTRAINMENT 6% ±1.5%, SLUMP AT 1 TO 4 INCHES ALL MATERIALS SHALL CONFORM TO SSPWC SECTION 202. OF THE STANDARD SPECIFICATIONS FOR PUBLIC WORKS CONSTRUCTION.
3. ALL CONCRETE EDGING AND JOINTING SHALL BE CONSTRUCTED IN ACCORDANCE WITH STD. DETAIL C-5.1.1 AND CONFORM TO SEC. 312.09 OF THE STANDARD SPECIFICATIONS FOR PUBLIC WORKS CONSTRUCTION (SSPWC).
4. IF OBSTRUCTIONS SUCH AS INLETS, UTILITY POLES, FIRE HYDRANTS, ETC. ARE ENCOUNTERED, THE LOCATION AND DIMENSIONS MAY BE ADJUSTED UPON APPROVAL BY CARSON CITY ENGINEER OR PUBLIC WORKS DIRECTOR. A MINIMUM LANDING OF 5 FEET X 5 FEET CLEAR IS REQUIRED WHEN DIRECTION OF TRAVEL MAY CHANGE. A MINIMUM OF 4 FEET CLEAR IS MAY BE USED UPON APPROVAL OF THE CARSON CITY ENGINEER OR PUBLIC WORKS DIRECTOR WHERE DIRECTION OF TRAVEL IS NOT EXPECTED TO CHANGE.
5. WHEN A CROSSWALK IS SERVICED BY RAMP, LANDINGS SHALL BE CONTAINED WITHIN THE CROSSWALK AREA.
6. EXISTING CONCRETE SHALL BE REMOVED TO A NEAT SAWCUT LINE OR NEAREST EXPANSION JOINT.
7. PLANTMIX BITUMINOUS SURFACE SHALL BE FLUSH WITH THE EDGE OF THE GUTTER PAN IN THE AREA OF THE CURB RAMP. GUTTER SHALL MAINTAIN POSITIVE DRAINAGE TO PREVENT PONDING.
8. ALL AGGREGATE BASE SHALL BE TYPE 2, CLASS B AND SHALL CONFORM TO SEC.200.01. OF THE STANDARD SPECIFICATIONS FOR PUBLIC WORKS CONSTRUCTION (SSPWC).
9. NEW CONCRETE SHALL HAVE A HEAVY BROOM FINISH PERPENDICULAR TO SIDEWALK.
10. DETECTABLE WARNINGS SHALL BE EAST JORDAN IRON WORKS 7005 SERIES CAST IRON DETECTABLE WARNING PLATES OR APPROVED EQUAL. INSTALLED PER MANUFACTURERS INSTALLATION GUIDELINES AND CONFORM TO ADAAG (4.29) "DETECTABLE WARNINGS". COLOR: ASPHALT DIPPED UNLESS OTHERWISE APPROVED BY CARSON CITY ENGINEER OR PUBLIC WORKS DIRECTOR. RADIAL DETECTABLE WARNINGS SHALL BE USED WHEN REQUIRED TO MAINTAIN MINIMUM CLEARANCE OF 3 INCHES AND MAXIMUM CLEARANCE OF 8 INCHES FROM DETECTABLE WARNINGS TO BACK FACE OF CURB. RADIAL DETECTABLE WARNINGS SHALL HAVE A RADIUS WITHIN 5 FEET OF BACK FACE OF CURB RADIUS.
11. (△1) AC PAVEMENT EDGE SHALL BE 1/4 INCH TO 1/2 INCH ABOVE THE LIP OF GUTTER.
    EXCEPTION: AC PAVEMENT EDGE SHALL BE FLUSH TO 1/4 INCH ABOVE THE LIP OF GUTTER WHEN LOCATED ADJACENT TO A PEDESTRIAN RAMP OR WITHIN AN ACCESSIBLE ROUTE.

NO.	REVISION	DATE	STANDARD DETAIL FOR PUBLIC WORKS CONSTRUCTION	SECTION CARSON CITY
△1	NOTE 11	6/12	**CURB RAMP GENERAL NOTES**	DRAWING NO. C-5.3.1
APPROVED BY:		7/09		DATE 7/2009

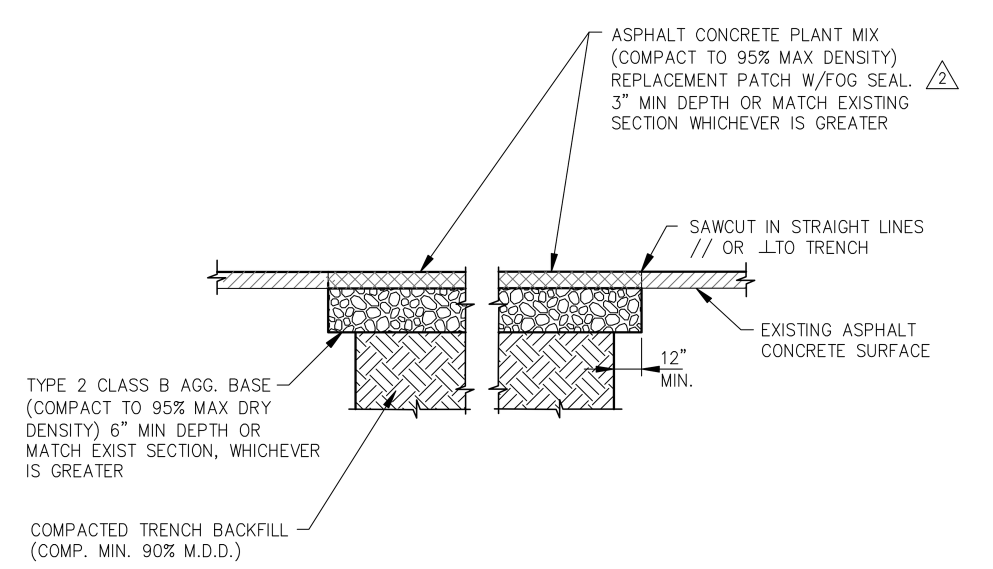

NOTES:

1. IF SAWCUT IS WITHIN 24 INCHES OF EDGE OF A.C. PAVEMENT REMOVE EXISTING PAVEMENT TO THAT EDGE AND REPLACE ENTIRE SECTION.
2. BITUMINOUS MATERIAL SHALL MEET THE REQUIREMENTS OF SECTIONS 201 AND 320 OF THE STANDARD SPECIFICATIONS FOR PUBLIC WORKS CONSTRUCTION.
3. MIXING, SPREADING, AND COMPACTING OF BITUMINOUS PAVEMENT SHALL BE DONE ONLY WHEN THE SURFACE ON WHICH THE MATERIALS ARE TO BE PLACED IS DRY AND WHEN THE ATMOSPHERIC TEMPERATURE IS ABOVE 50 DEGREES FAHRENHEIT AND HAS NOT BEEN BELOW 40 DEGREES FAHRENHEIT DURING THE PRECEDING 24 HOURS.
4. FINISHED SURFACE VARIATIONS SHALL BE 0 TO 0.25 INCHES ABOVE EXISTING SURFACE. ALL HUMPS EXCEEDING THIS TOLERANCE SHALL BE CORRECTED BY REMOVAL OF MATERIAL AND REPLACING IT WITH NEW MATERIAL. FINISHED SURFACE OF PATCH SHALL NOT BE BELOW EXISTING ADJACENT SURFACE.
5. PLANTMIX BITUMINOUS PAVEMENT SURFACE COURSE SHALL BE PG-64-22 TYPE 3 AND SUB SURFACE COURSES SHALL BE PG-64-22 TYPE 3 UNLESS OTHERWISE NOTED.
6. PLANTMIX BITMUMINOUS PAVEMENT PATCHES SHALL MATCH EXISTING SECTION OR HAVE A MINIMUM THICKNESS OF 3 INCHES, WHICHEVER IS GREATER. △2
7. PLANS SHALL SPECIFY PAVEMENT PATCH AND AGGREGATE BASE DEPTHS AS SPECIFIED BY THE DESIGN ENGINEER.

NO.	REVISION	DATE	STANDARD DETAIL FOR PUBLIC WORKS CONSTRUCTION	SECTION CARSON CITY
1	5" AC DEPTH	09/11	**PAVEMENT PATCH (MODIFIED)**	DRAWING NO. C-5.1.6
△2	3" AC DEPTH	05/13		
APPROVED BY:		09/11		DATE 7/2009

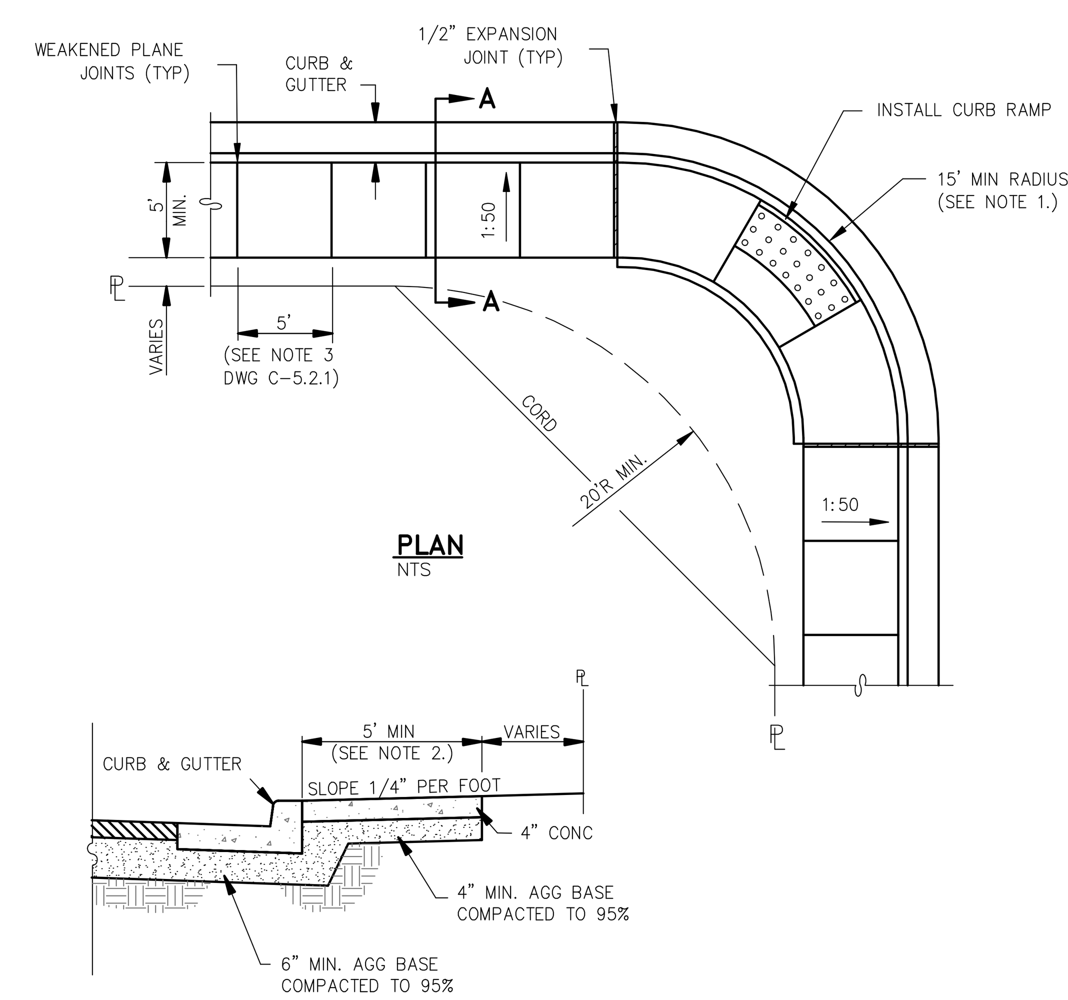

SECTION A–A
NTS

NOTES:

1. MINIMUM CURB RETURN RADIUS SHALL BE 15 FEET UNLESS OTHERWISE APPROVED BY THE CARSON CITY ENGINEER OR PUBLIC WORKS DIRECTOR.
2. SOME STREETS MAY REQUIRE WIDER SIDEWALKS.

NO.	REVISION	DATE	STANDARD DETAIL FOR PUBLIC WORKS CONSTRUCTION	SECTION CARSON CITY
			TYPE "A" SIDEWALK	DRAWING NO. C-5.2.2
APPROVED BY:		7/09		DATE 7/2009

1. NO CONCRETE SHALL BE PLACED UNTIL FORMS AND SUBGRADE ARE INSPECTED AND APPROVED BY CARSON CITY PUBLIC WORKS.
2. PORTLAND CEMENT CONCRETE (P.C.C.) SHALL HAVE THE FOLLOWING CHARACTERISTICS: SYNTHETIC FIBER–REINFORCEMENT (AT A MINIMUM OF 1 POUND PER CUBIC YARD), WITH COARSE AGGREGATE GRADATION CONFORMING TO SIZE No. 67 PER SECTION 200.05.03 OF THE STANDARD SPECIFICATIONS, AND SHALL HAVE A 1 TO 4 INCH SLUMP, AND 4 TO 7 PERCENT ENTRAINED AIR. 4000 PSI MIN COMPRESSIVE STRENGTH @ 28 DAYS, MIN 6 SACKS OF TYPE II CEMENT PER CUBIC YARD WITH A MAX. WATER/CEMENT RATIO OF 0.45, AIR ENTRAINMENT 6% ±1.5%, SLUMP AT 1 TO 4 INCHES ALL MATERIALS SHALL CONFORM TO SSPWC SECTION 202. OF THE STANDARD SPECIFICATIONS FOR PUBLIC WORKS CONSTRUCTION.
3. ALL CONCRETE EDGING AND JOINTING SHALL BE CONSTRUCTED IN ACCORDANCE WITH STD. DETAIL C-5.1.1 AND CONFORM TO SEC. 312.09 OF THE STANDARD SPECIFICATIONS FOR PUBLIC WORKS CONSTRUCTION (SSPWC).
4. IF OBSTRUCTIONS SUCH AS INLETS, UTILITY POLES, FIRE HYDRANTS, ETC. ARE ENCOUNTERED, THE LOCATION AND DIMENSIONS MAY BE ADJUSTED UPON APPROVAL BY CARSON CITY PUBLIC WORKS. A MINIMUM SURFACE OF 5 FEET X 5 FEET CLEAR IS REQUIRED WHEN DIRECTION OF TRAVEL MAY CHANGE AND A MINIMUM SURFACE OF 4 FEET CLEAR IS REQUIRED WHERE DIRECTION OF TRAVEL IS NOT EXPECTED TO CHANGE, UNLESS OTHERWISE APPROVED BY THE CARSON CITY ENGINEER OR PUBLIC WORKS DIRECTOR.
5. EXISTING CONCRETE SHALL BE REMOVED TO A NEAT SAWCUT LINE OR NEAREST EXPANSION JOINT.
6. ALL AGGREGATE BASE SHALL BE TYPE 2, CLASS B AND SHALL CONFORM TO SEC.200.01. OF THE STANDARD SPECIFICATIONS FOR PUBLIC WORKS CONSTRUCTION (SSPWC).
7. NEW CONCRETE SHALL HAVE A HEAVY BROOM FINISH PERPENDICULAR TO SIDEWALK.
8. (△1) AC PAVEMENT EDGE SHALL BE 1/4 INCH TO 1/2 INCH ABOVE THE LIP OF GUTTER.
   EXCEPTION: AC PAVEMENT EDGE SHALL BE FLUSH TO 1/4 INCH ABOVE THE LIP OF GUTTER WHEN LOCATED ADJACENT TO A PEDESTRIAN RAMP OR WITHIN AN ACCESSIBLE ROUTE.

NO.	REVISION	DATE	STANDARD DETAIL FOR PUBLIC WORKS CONSTRUCTION	SECTION CARSON CITY
△1	NOTE 8	6/12	**SIDEWALK AND DRIVEWAY GENERAL NOTES**	DRAWING NO. C-5.2.1
APPROVED BY:		7/09		DATE 7/2009

DESIGNED BY: BD
DRAWN BY: BD
CHECKED BY: DR
DWG NO.: 5-1202bs
SCALE (HORIZ): N/A
SCALE (VERT): N/A
PLOT DATE: 2013 MAY 01

CARSON CITY PUBLIC WORKS DEPARTMENT
3505 BUTTI WAY CARSON CITY, NEVADA 89701
PH: 887-2355 FAX; 887-2112

PROFESSIONAL ENGINEER – STATE OF NEVADA
JEFFERY A. SHARP
Exp: 6/30/14
CIVIL
No.017677

REV.	DATE	DESCRIPTION	BY	APP'D

EAST FIFTH STREET SEWER REHABILITATION
PROJECT No. 5.1202

DETAILS

H:\PROJECTS\5.1202 5th Street SS Rehab\dwg\5-1202bs.DWG;
H:\PROJECTS\5.1202 5th Street SS Rehab\dwg\5-1202bs.DWG, DT2-7, 5/21/2013 9:09:48 AM, bdoyal