KIT SIERRA WAY
WATER MAIN REPLACEMENT
CARSON CITY, NEVADA
PROJECT 4.1201

BOARD OF SUPERVISORS

Bob Crowell	Mayor
Karen Abowd	Supervisor
Brad Bonkowski	Supervisor
John McKenna	Supervisor
Jim Shirk	Supervisor
Alan Glover	City Clerk

DESIGNED FOR:

CARSON CITY PUBLIC WORKS DEPARTMENT
OPERATIONS DIVISION
3505 BUTTI WAY
CARSON CITY, NV 89701
887-2355

GENERAL NOTES:

1. ALL WORK SHALL CONFORM TO THE AMERICAN WATER WORKS ASSOCIATION (AWWA) STANDARDS PER NAC 445A.67145 (1)(a) AND THE "STANDARD SPECIFICATIONS FOR PUBLIC WORKS CONSTRUCTION" (SSPWC) AND THE "STANDARD DETAILS FOR PUBLIC WORKS CONSTRUCTION" (SDPWC) AS ADOPTED BY CARSON CITY. THE CONTRACTOR SHALL OBTAIN A PERMIT FOR PUBLIC WORKS CONSTRUCTION FROM THE CARSON CITY PERMIT CENTER PRIOR TO THE START OF CONSTRUCTION.
2. ALL TRAFFIC CONTROL AND BARRICADING WITHIN THE CARSON CITY RIGHT-OF-WAY SHALL CONFORM TO SECTION 100.33, 332.04 AND 332.05 OF THE STANDARD SPECIFICATIONS, PART VI OF THE MANUAL ON UNIFORM TRAFFIC CONTROL DEVICES, LATEST EDITION, AND THE UNR T2 CENTER, TEMPORARY TRAFFIC CONTROL GUIDELINES LATEST EDITION. A TRAFFIC CONTROL PLAN MUST BE SUBMITTED AND APPROVED BY THE CARSON CITY ENGINEERING DIVISION PRIOR TO ANY STREET CLOSURES.
3. THE CONTRACTOR SHALL CALL UNDERGROUND SERVICE ALERT "CALL BEFORE YOU DIG" (811) OR (1-800-227-2600) AT LEAST TWO (2) WORKING DAYS PRIOR TO START OF CONSTRUCTION AND COMPLY WITH THE REQUIREMENTS OF NRS AND NAC 455 THROUGHOUT THE COURSE OF THE WORK, SEWER SERVICE LATERALS ARE NOT OWNED OR MARKED BY CARSON CITY.
4. THE CONTRACTOR SHALL CALL THE CARSON CITY ENGINEERING DIVISION (887-2300) TWO (2) WORKING DAYS PRIOR TO THE START OF CONSTRUCTION. THE CONTRACTOR SHALL CALL ONE (1) WORKING DAY PRIOR TO REQUIRED INSPECTIONS AND TESTING. THE REQUIRED INSPECTIONS AND TESTING ARE LISTED ON THE INSPECTION RECORD ISSUED WITH EACH PERMIT. THE CONTRACTOR MUST HAVE THE PERMIT NUMBER AND THE DESCRIPTION LISTED ON THE INSPECTION RECORD TO SCHEDULE REQUIRED INSPECTIONS AND TESTING. FOR CITY CONTRACTED PROJECTS, THE CONTRACTOR SHALL SCHEDULE INSPECTIONS PER THE CONTRACT DOCUMENTS.
5. FINAL INSPECTIONS WILL BE PERFORMED BY CARSON CITY ENGINEERING DIVISION ACCORDING TO THE CARSON CITY INSPECTIONS AND TESTING PROCEDURES. NOTE: THESE PROCEDURES REQUIRE SUBMITTAL OF RECORD DRAWING PRINTS BY THE CONTRACTOR AND 10 WORKING DAYS TO PREPARE A FINAL PUNCH LIST. ALL CONDITIONS OF THE FINAL INSPECTION MUST BE COMPLETED PRIOR TO FINAL ACCEPTANCE OR ANY APPROVAL OF A CERTIFICATE OF OCCUPANCY BY THE CARSON CITY ENGINEERING DIVISION.
6. MODIFICATIONS TO THE APPROVED PLANS REQUIRES REVIEW AND APPROVAL BY THE CARSON CITY ENGINEERING DIVISION. WORK PERFORMED WITHOUT WRITTEN APPROVAL BY CARSON CITY ENGINEERING WILL REQUIRE REMOVAL AT THE CONTRACTORS EXPENSE.
7. THE APPROVED PLAN, PERMIT AND INSPECTION RECORD MUST BE ON THE JOB SITE AT ALL TIMES.
8. PLAN APPROVAL FOR SEWER AND WATER CONSTRUCTION SHALL EXPIRE ONE YEAR FROM DATE OF APPROVAL UNLESS CONSTRUCTION HAS BEEN INITIATED. (CCMC 12.06.180F, 12.01.140D)
9. THE CONTRACTOR WILL BE SOLELY AND COMPLETELY RESPONSIBLE FOR ACQUIRING A STORMWATER DISCHARGE PERMIT FROM THE NEVADA DIVISION OF ENVIRONMENTAL PROTECTION (NDEP) INCLUDING DEVELOPING, SUBMITTING AND IMPLEMENTING A STORM WATER POLLUTION PREVENTION PLAN (SWPPP). THE CONTRACTOR SHALL DEVELOP, PLACE AND MAINTAIN STORM WATER PROTECTION DEVICES IN COMPLIANCE WITH THE NEVADA CONTRACTORS FIELD GUIDE FOR CONSTRUCTION SITE BEST MANAGEMENT PRACTICES (JUNE 2008).
10. THE LOCATION OF EXISTING UTILITIES SHOWN ON THESE DRAWINGS IS BASED ON THE BEST INFORMATION AVAILABLE TO THE ENGINEER. IT SHALL BE THE CONTRACTORS' RESPONSIBILITY TO VERIFY THESE LOCATIONS AT THE PROPOSED POINTS OF CONNECTIONS AND IN AREAS OF POSSIBLE CONFLICT WITH NEW UTILITY INSTALLATION, PRIOR TO BEGINNING CONSTRUCTION. POTHOLING IS REQUIRED. SHOULD THE CONTRACTOR FIND ANY DISCREPANCIES BETWEEN THE CONDITIONS EXISTING IN THE FIELD AND THE INFORMATION SHOWN ON THESE DRAWINGS, HE SHALL NOTIFY THE ENGINEER BEFORE PROCEEDING WITH CONSTRUCTION.
11. THE CONTRACTOR WILL BE SOLELY AND COMPLETELY RESPONSIBLE FOR THE CONDITIONS OF THE JOB SITE, INCLUDING SAFETY OF ALL PERSONS AND PROPERTY DURING PERFORMANCE OF THE WORK. THIS REQUIREMENT WILL APPLY CONTINUOUSLY AND NOT BE LIMITED TO NORMAL WORKING HOURS. THE CONTRACTOR SHALL BE RESPONSIBLE FOR THE DESIGN AND CONSTRUCTION OF PROPER SHORING OF TRENCHES IN ACCORDANCE WITH OCCUPATIONAL SAFETY LAWS. THE DUTIES OF THE ENGINEER DO NOT INCLUDE REVIEW OF THE ADEQUACY OF THE CONTRACTOR'S SAFETY IN, ON, OR NEAR THE CONSTRUCTION SITE.
12. SHOULD IT APPEAR THAT THE WORK TO BE DONE, OR ANY MATTER RELATIVE THERETO, IS NOT SUFFICIENTLY DETAILED OR EXPLAINED ON THESE PLANS, THE CONTRACTOR SHALL CONTACT THE ENGINEER FOR SUCH FURTHER EXPLANATIONS AS MAY BE NECESSARY.
13. ALL PVC WATER PIPELINES SHALL BE PRESSURE TESTED IN ACCORDANCE WITH AWWA STANDARD C605 PER NAC 445A.67145 (7)(b) PRIOR TO BEING FLUSHED, DISINFECTED OR SAMPLED FOR AN ANALYSIS OF WATER QUALITY. ALL PVC WATER PIPELINES ARE TO BE DISINFECTED ACCORDING TO AWWA STANDARD C651 PER NAC 445A.67145 (6)(a).

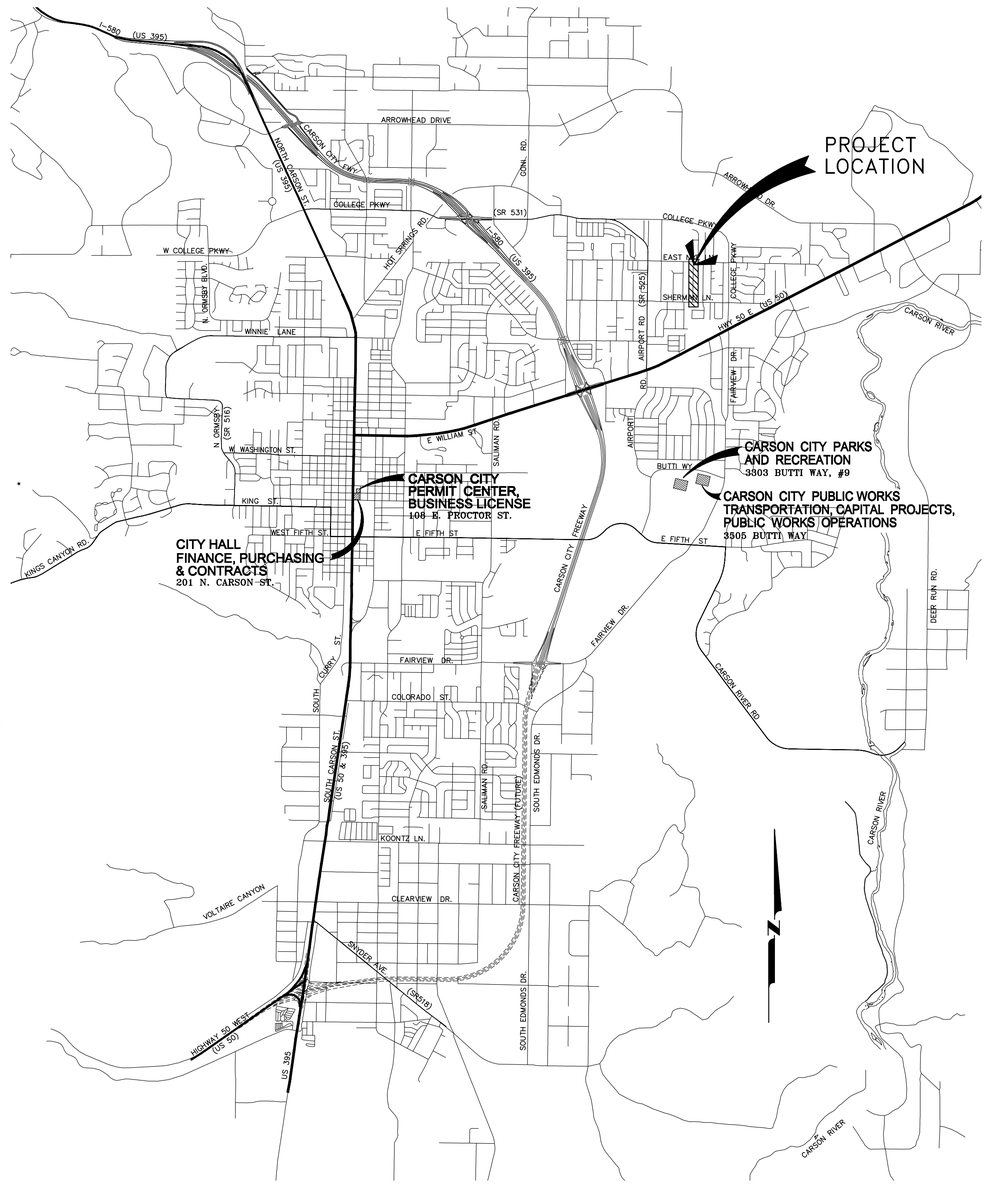

VICINITY MAP
N.T.S.

SHEET INDEX

1 ..... TITLE SHEET
2 ..... INDEX SHEET & STORMWATER PROTECTION PLAN
3 ..... PLAN & PROFILE – KIT SIERRA WAY (STA 10+00 to STA 16+00)
4 ..... PLAN & PROFILE – KIT SIERRA WAY (STA 16+00 to STA 23+50)
5 ..... DETAILS
6 ..... DETAILS

REVIEWED FOR CITY REQUIREMENTS:

DARREN SCHULZ, P.E. – DEPUTY PUBLIC WORKS DIRECTOR DATE

Call before you Dig
Avoid cutting underground utility lines. It's costly.
Call 811 OR 1-800-227-2600

APPLICATION NO. _____

DESIGNED BY: BD
DRAWN BY: BD
CHECKED BY: JS
DWG NO.: 4-1201KIT-TS1.DWG
SCALE (HORIZ): N/A
SCALE (VERT): N/A
DATE: 2013 JULY 18

CARSON CITY
PUBLIC WORKS DEPARTMENT
3505 BUTTI WAY CARSON CITY, NEVADA 89701
PH: 887-2355 FAX: 887-2112

PROFESSIONAL ENGINEER – STATE OF NEVADA
JEFFERY A. SHARP
Exp. 6/30/14
CIVIL
No.017677
7/18/13

REV.	DATE	DESCRIPTION	BY	APP'D

KIT SIERRA WAY
WATER MAIN REPLACEMENT
PROJECT No. 4.1201

TITLE SHEET

SHEET 1 OF 6

BID SET - NOT FOR CONSTRUCTION

H:\PROJECTS\4.1201 Waterline Replacement\dwg\4-1201KIT-TS1.dwg 7/18/13

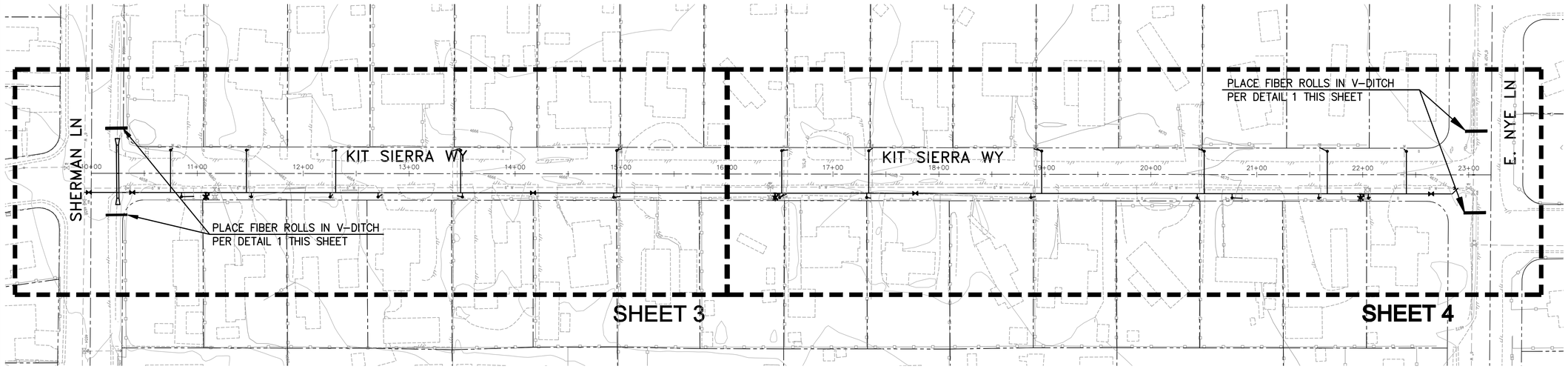

SHEET INDEX

SCALE: 1" = 50'

LEGEND

EXISTING	PROPOSED	
		PROPERTY LINE
WV	WV	WATER VALVE
8"W		WATER LINE
		WATER METER
		FIRE HYDRANT
XX"SS		SEWER LINE
S		SANITARY SEWER MANHOLE
S		SEWER SERVICE
XX"SD		STORM DRAIN CULVERT

EXISTING	PROPOSED	
		DRAINAGE SWALE
		GAS LINE
GV		GAS VALVE
		UTILITY POLE
TYPE	TYPE	SIGN
3221		ELEVATION CONTOUR
		AC PAVEMENT
		AC PAVEMENT PATCH
		PCC PAVEMENT
		FENCE LINE

SCALE
50 0 25 50
HORIZ: 1" = 50'

Call before you Dig
Avoid cutting underground utility lines. It's costly.
Call 811
OR
1-800-227-2600

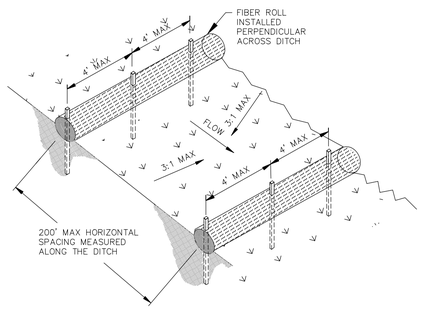

FIBER ROLL CHECK DAM ACROSS DRAINAGE DITCH

NO SCALE

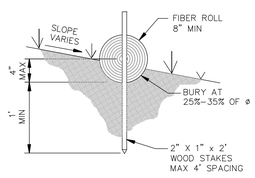

ENTRENCHING DETAIL

NO SCALE

TYPICAL FIBER ROLL INSTALLATION (1)

NO SCALE

STORMWATER PROTECTION NOTES:

1. PRIOR TO ANY CONSTRUCTION ACTIVITY, THE CONTRACTOR SHALL INSTALL AND MAINTAIN ALL STORM WATER PROTECTION DEVICES IN ACCORDANCE WITH THE "NEVADA CONTRACTORS FIELD GUIDE FOR CONSTRUCTION SITE BEST MANAGEMENT PRACTICES" AND DETAILS AS SHOWN.
2. ALL INSTALLED PROTECTION DEVICES SHALL BE INSPECTED AND APPROVED BY THE CARSON CITY CONSTRUCTION INSPECTOR PRIOR TO ANY CONSTRUCTION ACTIVITY.
3. BMP'S IN ADDITION TO THOSE INDICATED ON PLAN SHEETS, AND THE CONTRACTOR'S SWPPP MAY BE REQUIRED IF THEY DON'T MEET LOCAL PERFORMANCE STANDARDS.
4. ALL BMPs MUST BE INSPECTED WEEKLY, PRIOR TO FORECASTED RAIN EVENTS, AND WITHIN 24 HOURS AFTER ANY EVENT THAT CREATES RUNOFF AT THE SITE.
5. ACCUMULATED SEDIMENT MUST BE REMOVED FROM BMPs WHEN THE DESIGN CAPACITY HAS BEEN REDUCED BY 50 PERCENT OR MORE. SEDIMENT MUST ALSO BE REMOVED WITHIN SEVEN DAYS AFTER A RUNOFF EVENT OR PRIOR TO THE NEXT FORECASTED RAIN EVENT WHICHEVER IS EARLIER.
6. CONTRACTOR SHALL INSPECT LOCAL ROADS ADJACENT TO THE SITE DAILY, SWEEP OR VACUUM TO REMOVE ANY VISIBLE ACCUMULATED SEDIMENT.
7. ANY SEDIMENT THAT IS TRACKED ONTO PAVEMENT SHALL BE REMOVED BY SHOVELING, STREET SWEEPING OR VACUUMING. THE SEDIMENT COLLECTED BY SWEEPING SHALL BE REMOVED OR STABILIZED ON SITE. THE PAVEMENT SHALL NOT BE CLEANED BY WASHING DOWN THE STREET, EXCEPT WHEN SWEEPING IS INEFFECTIVE AND THERE IS A THREAT TO PUBLIC SAFETY. IF IT IS NECESSARY TO WASH THE STREETS, THE CONSTRUCTION OF A SMALL SUMP SHALL BE CONSIDERED. THE SEDIMENT WOULD THEN BE WASHED INTO THE SUMP WHERE IT CAN BE CONTROLLED
8. CONTRACTOR SHALL BE RESPONSIBLE FOR MAINTAINING DUST CONTROL WITHIN THE CONSTRUCTION LIMITS AT ALL TIMES.
9. STORM DRAIN INLET PROTECTION SHALL BE PLACED ACCORDINGLY ON THE NEAREST INLETS DOWNSTREAM OF ALL CONSTRUCTION ACTIVITIES.
10. HIGH VISIBILITY ORANGE SILT FENCE SHALL BE INSTALLED PER THE DETAILS SHOWN HEREON, AND MAINTAINED THROUGH OUT THE PROJECT.
11. THE CONTRACTOR OR HIS QUALIFIED AGENT IS REQUIRED TO ROUTINELY INSPECT ALL AREAS OF DISTURBED AND BARE SOIL, AREAS USED FOR STORAGE OF MATERIALS AND EQUIPMENT THAT ARE EXPOSED TO PRECIPITATION, ONSITE VEHICLE ENTRANCE AND EXIT LOCATIONS AND ALL ONSITE EROSION AND SEDIMENT CONTROL BMPS.

BASIS OF BEARING AND ELEVATION

THE BASIS OF BEARING, COORDINATES AND ELEVATION FOR THIS PROJECT IS: THE LINE BETWEEN "HV-1" (N 14740145.39, E 2299207.80 ELEV=4647.89) – CARSON CITY CONTROL POINT CC012 LOCATED ON THE EAST SIDE OF AIRPORT RD. AT 180' NORTH OF THE NORTH EDGE OF HWY 50 E. AND "HV-2" (N 14743452.63 E 2301796.72 ELEV=4672.28) – CARSON CITY CONTROL POINT CC031 LOCATED AT THE NORTHWEST CORNER OF THE INTERSECTION OF E. NYE LN. AND E. COLLEGE PKWY. WITH THE LINE BETWEEN THE TWO POINTS HAVING A BEARING OF N38°03'14"E AND DISTANCE OF 4200.05'.

COORDINATES ARE NEVADA STATE PLANE, WEST ZONE NAD83.

AERIAL MAPPING AND TOPOGRAPHY PREPARED BY NORTH AMERICAN MAPPING, FLOWN 10-5-04, WITH SUPPLEMENTAL FIELD SURVEY DATA PROVIDED BY CARSON CITY PUBLIC WORKS. ELEVATIONS ARE BASED ON NAVD88 DATUM

NOTE:
THE CONTRACTOR SHALL BE HELD RESPONSIBLE TO REPLACE IN KIND ALL EXISTING SURVEY CONTROL MARKERS WHICH ARE DAMAGED OR DISTURBED DUE TO HIS CONSTRUCTION EFFORTS. RE-ESTABLISHMENT OF SURVEY CONTROL MARKERS SHALL BE COMPLETED BY A NEVADA LICENSED PROFESSIONAL LAND SURVEYOR.

HORIZONTAL & VERTICAL CONTROL POINT DATA

POINT	NORTHING	EASTING	ELEVATION	DESCRIPTION / LOCATION
HV-1	14740145.39	2299207.80	4647.89	CARSON CITY CONTROL POINT CC012
HV-2	14743452.63	2301796.72	4672.28	CARSON CITY CONTROL POINT CC031

DESIGNED BY: BD
DRAWN BY: BD
CHECKED BY: JS
DWG NO.: 4-1201KIT-SIERRA
SCALE (HORIZ): 1"=50'
SCALE (VERT): N/A
PLOT DATE: 2013 JULY 18

CARSON CITY
PUBLIC WORKS DEPARTMENT
3505 BUTTI WAY CARSON CITY, NEVADA 89701
PH: 887-2355 FAX: 887-2112

PROFESSIONAL ENGINEER STATE OF NEVADA
JEFFERY A. SHARP
EXP: 6/30/14
CIVIL
No.017677
7/18/13

REV.	DATE	DESCRIPTION	BY	APP'D

KIT SIERRA WAY
WATER MAIN REPLACEMENT
PROJECT No. 4.1201

INDEX SHEET &
STORMWATER PROTECTION PLAN

SHEET 2 OF 6

BID SET - NOT FOR CONSTRUCTION

H:\PROJECTS\4.1201 Waterline Replacement\dwg\4-1201KIT-SIERRA.dwg

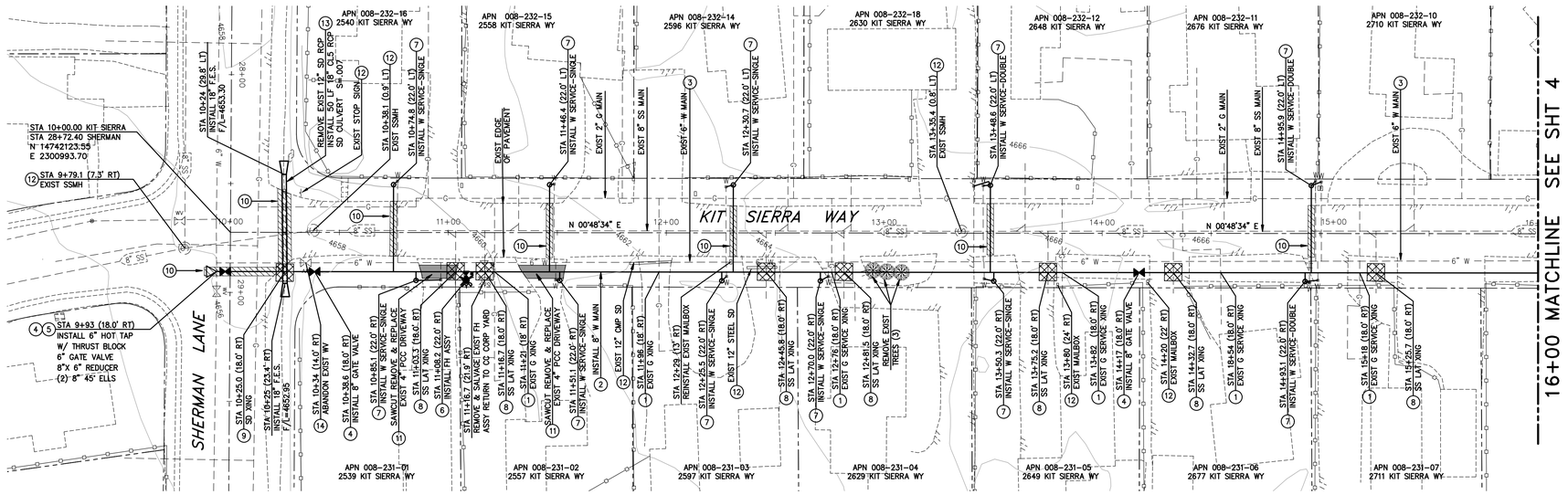

PLAN – KIT SIERRA WAY

SCALE: 1" = 30' HORIZ.

SCALE
30 0 15 30
HORIZ: 1" = 30'

WATER NOTES

PER NAC 445A.67145 (6), WATER MAIN MUST NOT BE PLACED INTO SERVICE UNTIL:

1. THE WATER MAIN HAS BEEN DISINFECTED IN ACCORDANCE WITH AWWA STANDARD C651.
2. THE DISPOSAL OF ANY SPENT CHLORINE SOLUTIONS MUST BE COORDINATED WITH NDEP'S BUREAU OF WATER POLLUTION CONTROL (BWPC).
3. ANALYSES OF THE WATER MAIN WHICH INDICATE THAT THE WATER MEETS PRIMARY DRINKING WATER STANDARDS FOR COLIFORM BACTERIA (ABSENT FOR COLIFORM BACTERIA) HAVE BEEN OBTAINED AND REPORTED TO BSDW. PER AWWA STANDARD C651, TWO SETS OF CONSECUTIVE SAMPLES MUST BE TAKEN AT LEAST 24 HOURS APART FROM EVERY 1200 FEET OF MAIN, AT THE END OF THE LINE, AND FROM EACH BRANCH.

PER NAC 445A.67145 (8), DURING THE CONSTRUCTION OF A DISTRIBUTION SYSTEM, ANY OPENINGS IN UNFINISHED PIPING OR APPURTENANCES MUST BE SEALED AT THE END OF EACH WORKING DAY IN SUCH A MANNER AS TO PREVENT THE ENTRY OF BIRDS AND OTHER ANIMALS, DIRT, TRENCH WATER AND OTHER SOURCES OF POLLUTION OR CONTAMINATION.

CONSTRUCTION NOTES

1. POTHOLE EXISTING UTILITY CROSSINGS. PROTECT EXISTING UTILITY IN PLACE.
2. INSTALL 8" C900 DR18 WATER MAIN PER DETAIL C-1.2.1.
3. ABANDON EXISTING WATER MAIN UPON COMPLETION OF NEW WATER MAIN INSTALLATION. SLURRY FILL MAIN WITH TYPE 'A' EXCAVATABLE SLURRY.
4. INSTALL GATE VALVE PER DETAIL C-3.1.4 AND C-3.1.6.
5. INSTALL 6" HOT TAP PER DETAIL C-3.1.3. INSTALL 8"X 6" REDUCER, RAISE/LOWER WATER MAIN PER DETAIL C-3.1.8.
6. INSTALL FIRE HYDRANT ASSEMBLY PER DETAIL C-3.1.7 AND C-3.1.7.1.
7. CONSTRUCT NEW 3/4" WATER SERVICE PER DETAILS C-3.2.1 AND C-3.2.3. ONCE THE NEW WATER MAIN HAS BEEN DISINFECTED, TESTED, AND APPROVED BY THE CITY, REMOVE EXISTING PIT SETTER AND TIE EXISTING SERVICE LINE(S) INTO NEW PIT SETTER. MAINTAIN MINIMUM 48 INCH HORIZONTAL CLEARANCE FROM SEWER LATERALS.
8. WATER MAIN/SANITARY SEWER LATERAL CROSSING. CENTER 20 LF STICK OF WATER MAIN PIPE AT CROSSING AND RESTRAIN WATER MAIN JOINTS ON BOTH SIDES OF CROSSING. POLYETHYLENE WRAP AND CONCRETE ENCASE SANITARY SEWER PIPE JOINTS WITHIN OPEN PIPE TRENCH PER DETAIL C-3.1.2A.
9. NEW STORM DRAIN CROSSING OVER NEW WATER MAIN. CENTER 20 LF STICK OF WATER PIPE AT CROSSING AND RESTRAIN WATER MAIN JOINTS ON BOTH SIDES OF CROSSING. POLYETHYLENE WRAP AND CONCRETE ENCASE ALL STORM DRAIN JOINTS WITHIN 10 FEET EACH SIDE OF THE CROSSING SIMILAR TO DETAIL C-3.1.2A.
10. SAWCUT, REMOVE AND PATCH EXISTING AC PAVEMENT AS NECESSARY PER DETAIL C-5.1.6
11. SAWCUT AND REMOVE EXIST PCC DRIVEWAY APRON AS NECESSARY. REPLACE WITH 4" PCC CONCRETE ON 6" AGG BASE COMPACTED TO 95%
12. PROTECT IN PLACE
13. INSTALL CLASS 5 REINFORCED CONCRETE PIPE PER DETAIL C-1.2.1 MAINTAIN EXISTING FLOW THROUGHOUT CONSTRUCTION.
14. ABANDON EXISTING WATER VALVE PER "VALVE ABANDONMENT DETAIL" SHEET 7 UPON NEW MAIN BEING PLACED INTO SERVICE.

LEGEND:

- AREAS OF SPECIAL CONSTRUCTION. SEE CONSTRUCTION NOTES 8 AND 9.
- SAWCUT & REMOVE EXISTING ASPHALT PAVEMENT CONST PERMANENT ASPHALT PAVEMENT PATCH PER DETAIL C-5.1.6.
- SAWCUT & REMOVE EXISTNG PCC CONCRETE. REPLACE WITH 4" PCC ON 6" AGG BASE COMPACTED TO 95%

Call before you Dig
Avoid costly underground utility hit & damage.
Call 811
OR
1-800-227-2600

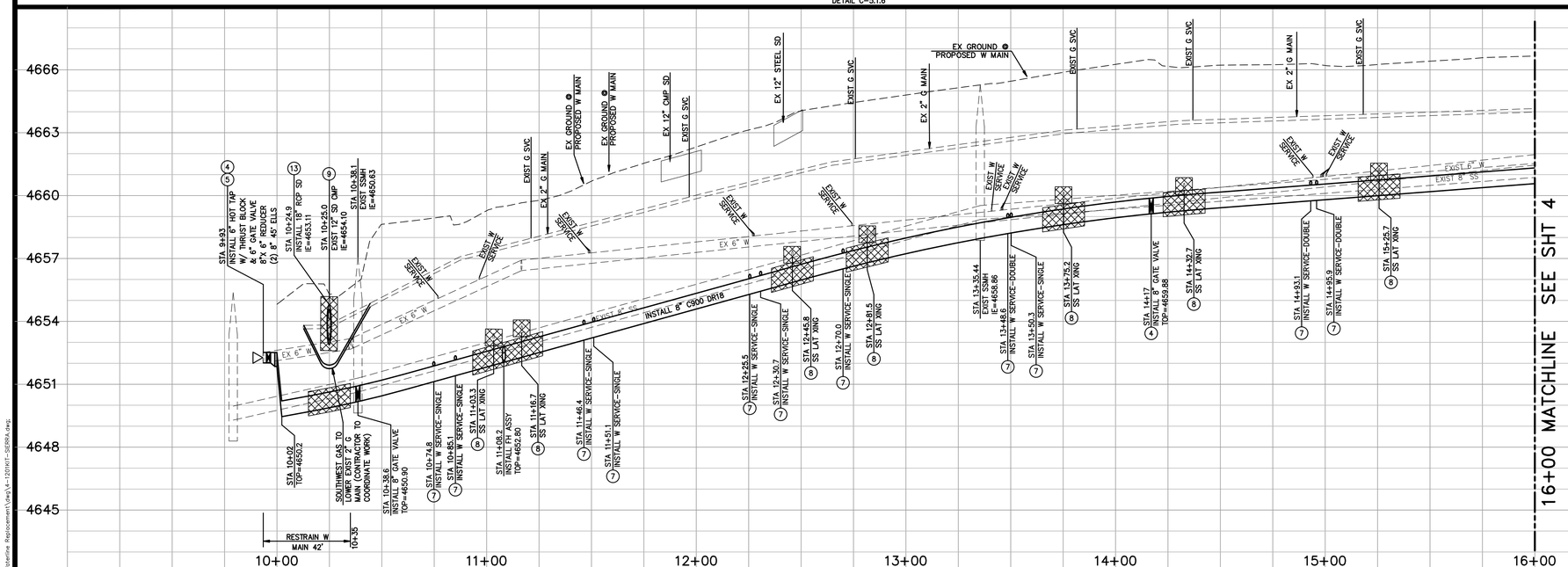

PROFILE – KIT SIERRA WAY

SCALE: 1" = 30' HORIZ.
1" = 3' VERT.

DESIGNED BY: BD
DRAWN BY: BD
CHECKED BY: JS
DWG NO.: 4-1201KIT-SIERRA
SCALE (HORIZ): 1"=30'
SCALE (VERT): 1"=3'
PLOT DATE: 2013 JULY 18

CARSON CITY
PUBLIC WORKS DEPARTMENT
3505 BUTTI WAY CARSON CITY, NEVADA 89701
PH: 887-2355 FAX: 887-2112

PROFESSIONAL ENGINEER STATE OF NEVADA
JEFFERY A. SHARP
EXP: 6/30/
CIVIL
No.017677
7/18/13

REV.	DATE	DESCRIPTION	BY	APP'D

KIT SIERRA WAY
WATER MAIN REPLACEMENT
PROJECT No. 4.1201
PLAN & PROFILE
KIT SIERRA WAY
STA 10+00 to STA 16+00

SHEET 3 OF 6

BID SET - NOT FOR CONSTRUCTION

H:\PROJECTS\4-1201 Waterline Replacement\dwg\4-1201KIT-SIERRA.dwg

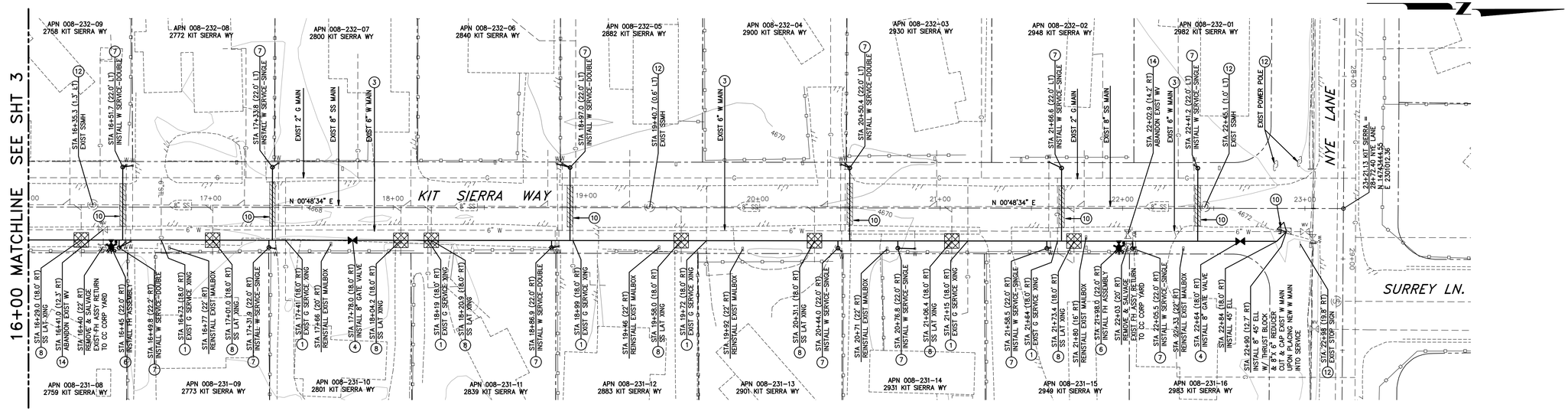

PLAN – KIT SIERRA WAY

SCALE: 1" = 30' HORIZ.

CONSTRUCTION NOTES

1. POTHOLE EXISTING UTILITY CROSSINGS. PROTECT EXISTING UTILITY IN PLACE.
2. INSTALL 8" C900 DR18 WATER MAIN PER DETAIL C-1.2.1.
3. ABANDON EXISTING WATER MAIN UPON COMPLETION OF NEW WATER MAIN INSTALLATION. SLURRY FILL MAIN WITH TYPE 'A' EXCAVATABLE SLURRY.
4. INSTALL GATE VALVE PER DETAIL C-3.1.4 AND C-3.1.6.
5. INSTALL 6" HOT TAP PER DETAIL C-3.1.3. INSTALL 8"X 6" REDUCER, RAISE/LOWER WATER MAIN PER DETAIL C-3.1.8.
6. INSTALL FIRE HYDRANT ASSEMBLY PER DETAIL C-3.1.7 AND C-3.1.7.1.
7. CONSTRUCT NEW 3/4" WATER SERVICE PER DETAILS C-3.2.1 AND C-3.2.3. ONCE THE NEW WATER MAIN HAS BEEN DISINFECTED, TESTED, AND APPROVED BY THE CITY, REMOVE EXISTING PIT SETTER AND TIE EXISTING SERVICE LINE(S) INTO NEW PIT SETTER. MAINTAIN MINIMUM 48 INCH HORIZONTAL CLEARANCE FROM SEWER LATERALS.
8. WATER MAIN/SANITARY SEWER LATERAL CROSSING. CENTER 20 LF STICK OF WATER MAIN PIPE AT CROSSING AND RESTRAIN WATER MAIN JOINTS ON BOTH SIDES OF CROSSING. POLYETHYLENE WRAP AND CONCRETE ENCASE SANITARY SEWER PIPE JOINTS WITHIN OPEN PIPE TRENCH PER DETAIL C-3.1.2A.
9. NEW STORM DRAIN CROSSING OVER NEW WATER MAIN. CENTER 20 LF STICK OF WATER PIPE AT CROSSING AND RESTRAIN WATER MAIN JOINTS ON BOTH SIDES OF CROSSING. POLYETHYLENE WRAP AND CONCRETE ENCASE ALL STORM DRAIN JOINTS WITHIN 10 FEET EACH SIDE OF THE CROSSING SIMILAR TO DETAIL C-3.1.2A.
10. SAWCUT, REMOVE AND PATCH EXISTING AC PAVEMENT AS NECESSARY PER DETAIL C-5.1.6
11. SAWCUT AND REMOVE EXIST PCC DRIVEWAY APRON AS NECESSARY. REPLACE WITH 4" PCC CONCRETE ON 6" AGG BASE COMPACTED TO 95%.
12. PROTECT IN PLACE
13. INSTALL CLASS 5 REINFORCED CONCRETE PIPE PER DETAIL C-1.2.1 MAINTAIN EXISTING FLOW THROUGHOUT CONSTRUCTION.
14. ABANDON EXISTING WATER VALVE PER "VALVE ABANDONMENT DETAIL" SHEET 7 UPON NEW MAIN BEING PLACED INTO SERVICE.

LEGEND:

- AREAS OF SPECIAL CONSTRUCTION. SEE CONSTRUCTION NOTES 8 AND 9.
- SAWCUT & REMOVE EXISTING ASPHALT PAVEMENT CONST PERMANENT ASPHALT PAVEMENT PATCH PER DETAIL C-5.1.6.
- SAWCUT & REMOVE EXISTNG PCC CONCRETE. REPLACE WITH 4" PCC ON 6" AGG BASE COMPACTED TO 95%.

SCALE
30 0 15 30
HORIZ: 1" = 30"

Call before you Dig
Avoid costly underground utility hit & damage.
Call 811
OR
1-800-227-2600

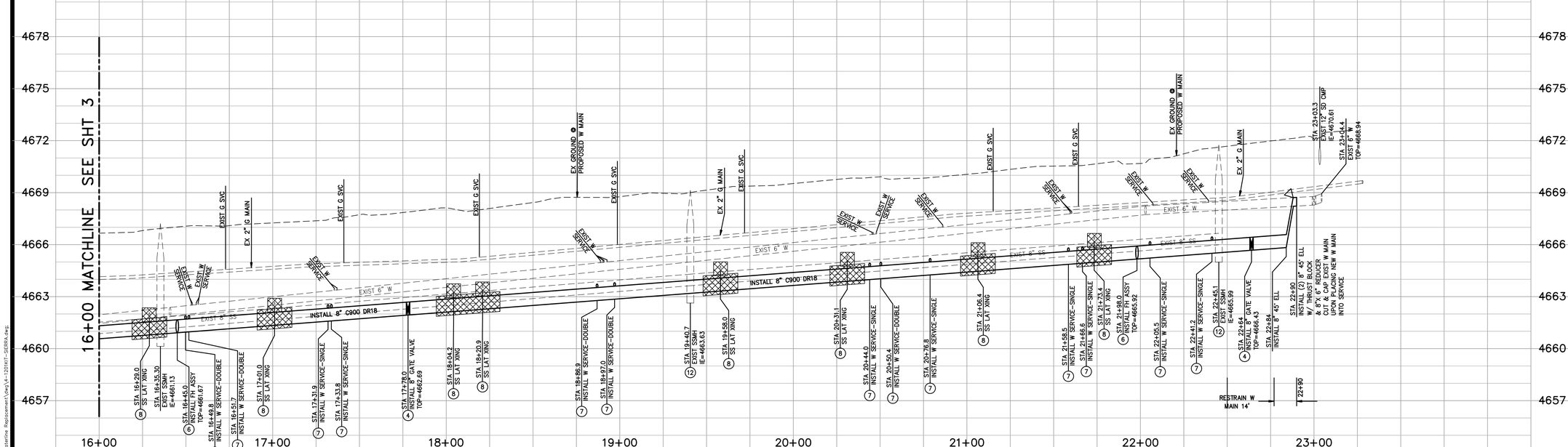

PROFILE – KIT SIERRA WAY

SCALE: 1" = 30' HORIZ.
1" = 3' VERT.

DESIGNED BY:	BD
DRAWN BY:	BD
CHECKED BY:	JS
DWG NO.:	4-1201KIT-SIERRA
SCALE (HORIZ):	1"=30'
SCALE (VERT):	1"=3'
PLOT DATE:	2013 JULY 18

CARSON CITY
PUBLIC WORKS DEPARTMENT
3505 BUTTI WAY CARSON CITY, NEVADA 89701
PH: 887-2355 FAX: 887-2112

PROFESSIONAL ENGINEER - STATE OF NEVADA
JEFFERY A. SHARP
Exp. 6/30/
CIVIL
No. 017677
7/18/13

REV.	DATE	DESCRIPTION	BY	APP'D

KIT SIERRA WAY
WATER MAIN REPLACEMENT
PROJECT No. 4.1201

PLAN & PROFILE
KIT SIERRA WAY
STA 16+00 to STA 23+50

SHEET 4 OF 6

BID SET - NOT FOR CONSTRUCTION

H:\PROJECTS\4.1201 Waterline Replacement\dwg\4-1201KIT-SIERRA.dwg

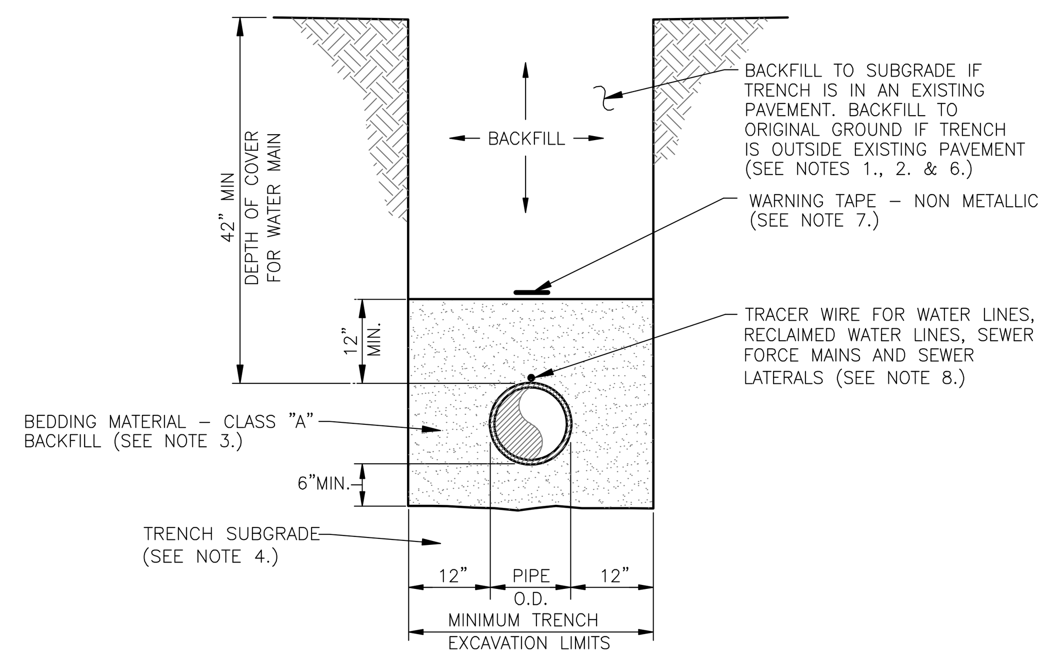

TYPICAL TRENCH SECTION
NTS

NOTES:

1. WATER DENSIFIED BACKFILL AND TUNNELING SHALL BE BY SPECIAL PROVISION ONLY.
2. BACKFILL SHALL CONFORM TO THE REQUIREMENTS OF CLASS E BACKFILL AS SPECIFIED IN SUBSECTION 200.03.06 OF THE SSPWC. MATERIAL SHALL BE PLACED IN LIFT THICKNESS SPECIFIED IN SUBSECTION 305.10 OF THE SSPWC AND DENSIFIED TO 90% RELATIVE COMPACTION.
3. BEDDING SHALL CONFORM TO THE REQUIREMENTS OF CLASS A BACKFILL AS SPECIFIED IN SUBSECTION 200.03.02 OF THE SSPWC. MATERIAL SHALL BE DENSIFIED TO 90% RELATIVE COMPACTION.
4. PLANS SHALL INCLUDE A DETAIL FOR SUBGRADE STABILIZATION INCLUDING BACKFILL MATERIAL, STRUCTURAL GEOTEXTILE FILTER FABRIC AND MODIFIED CUTOFF COLLARS WHEN POTENTIAL FOR UNSTABLE SUBGRADES EXIST, SUBJECT TO THE APPROVAL OF THE CARSON CITY ENGINEER OR PUBLIC WORKS DIRECTOR.
5. FOR TRENCHES IN ROADWAY SECTION, SEE PAVEMENT PATCH DETAIL (DWG. No. C–5.1.6).
6. FOR THE PURPOSE OF PAYMENT; EXCAVATION AND BACKFILL QUANTITIES ARE BASED ON THESE STANDARD DRAWINGS, AND NO ADDITIONAL COMPENSATION WILL BE MADE. SHORING OR SLOPED CUT SLOPES MAY BE NECESSARY, BUT THERE WILL BE NO ADDITIONAL PAYMENT. ALL EXCAVATIONS SHALL CONFORM TO THE LATEST O.S.H.A. REQUIREMENTS.
7. PLACE NON METALLIC WARNING TAPE 1 FOOT ABOVE ALL BURIED PIPES AND CONDUITS.
8. TRACER WIRE SHALL BE 12 GAUGE (MINIMUM THICKNESS) INSULATED SOLID COPPER OR COPPER–CLAD STEEL CORE WIRE. INSULATION SHALL BE 30 MIL HDPE. PLANS SHALL SPECIFY WIRE STRENGTH AND INSULATION THICKNESS FOR BORING APPLICATIONS. SPLICES SHALL BE CONNECTED BY WIRE NUTS, SEALED WITH AQUA SEAL OR SILICON FILLED, AND DOUBLE WRAPPED WITH U/L LISTED ELECTRICAL TAPE. TRACER WIRE COLOR SHALL BE, BLUE FOR WATER, PURPLE FOR RECLAIMED WATER, AND GREEN FOR SEWER.

NO.	REVISION	DATE	STANDARD DETAIL FOR PUBLIC WORKS CONSTRUCTION	SECTION CARSON CITY
			TRENCH EXCAVATION AND BACKFILL (MODIFIED)	DRAWING NO. C–1.2.1 (305)
APPROVED BY:		7/09		DATE 7/2009

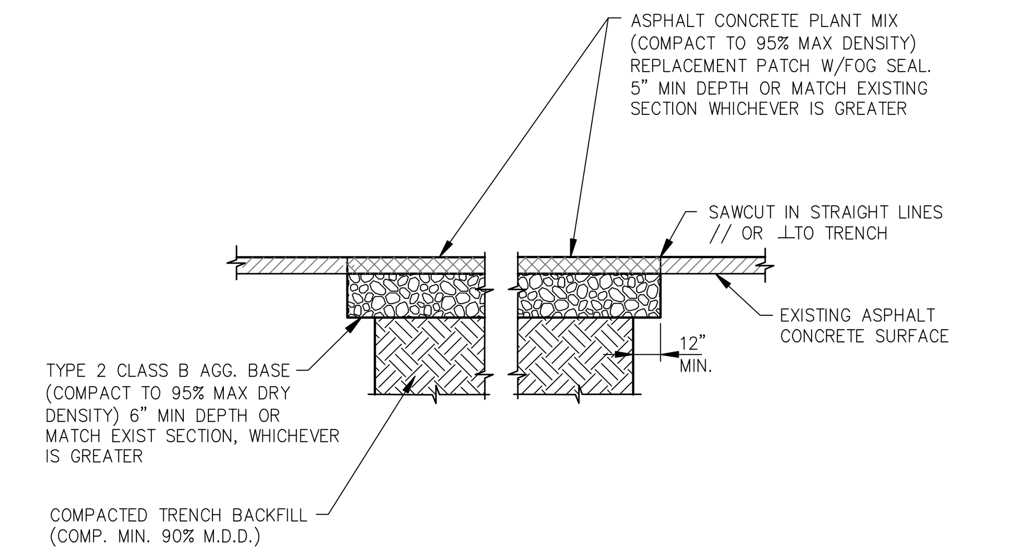

NOTES:

1. IF SAWCUT IS WITHIN 24 INCHES OF EDGE OF A.C. PAVEMENT REMOVE EXISTING PAVEMENT TO THAT EDGE AND REPLACE ENTIRE SECTION.
2. BITUMINOUS MATERIAL SHALL MEET THE REQUIREMENTS OF SECTIONS 201 AND 320 OF THE STANDARD SPECIFICATIONS FOR PUBLIC WORKS CONSTRUCTION.
3. MIXING, SPREADING, AND COMPACTING OF BITUMINOUS PAVEMENT SHALL BE DONE ONLY WHEN THE SURFACE ON WHICH THE MATERIALS ARE TO BE PLACED IS DRY AND WHEN THE ATMOSPHERIC TEMPERATURE IS ABOVE 50 DEGREES FAHRENHEIT AND HAS NOT BEEN BELOW 40 DEGREES FAHRENHEIT DURING THE PRECEDING 24 HOURS.
4. FINISHED SURFACE VARIATIONS SHALL BE 0 TO 0.25 INCHES ABOVE EXISTING SURFACE. ALL HUMPS EXCEEDING THIS TOLERANCE SHALL BE CORRECTED BY REMOVAL OF MATERIAL AND REPLACING IT WITH NEW MATERIAL. FINISHED SURFACE OF PATCH SHALL NOT BE BELOW EXISTING ADJACENT SURFACE.
5. PLANTMIX BITUMINOUS PAVEMENT SURFACE COURSE SHALL BE PG–64–22 TYPE 3 AND SUB SURFACE COURSES SHALL BE PG–64–22 TYPE 3 UNLESS OTHERWISE NOTED.
6. PLANTMIX BITMUMINOUS PAVEMENT PATCHES SHALL MATCH EXISTING SECTION OR HAVE A MINIMUM THICKNESS OF 5 INCHES, WHICHEVER IS GREATER.
7. PLANS SHALL SPECIFY PAVEMENT PATCH AND AGGREGATE BASE DEPTHS AS SPECIFIED BY THE DESIGN ENGINEER.

NO.	REVISION	DATE	STANDARD DETAIL FOR PUBLIC WORKS CONSTRUCTION	SECTION CARSON CITY
1	5" AC DEPTH	09/11	**PAVEMENT PATCH**	DRAWING NO. C–5.1.6
APPROVED BY:		09/11		DATE 7/2009

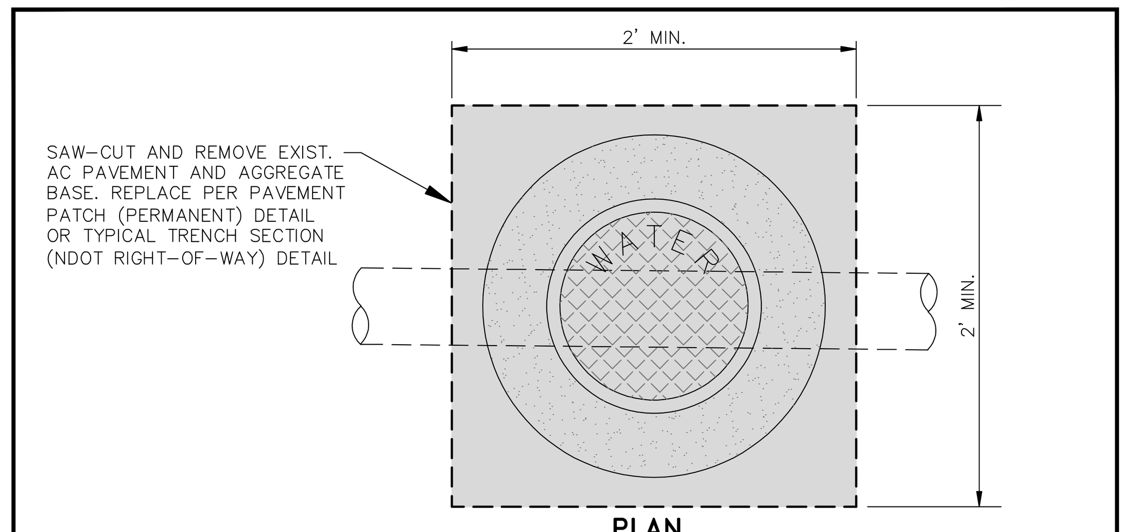

PLAN
NTS

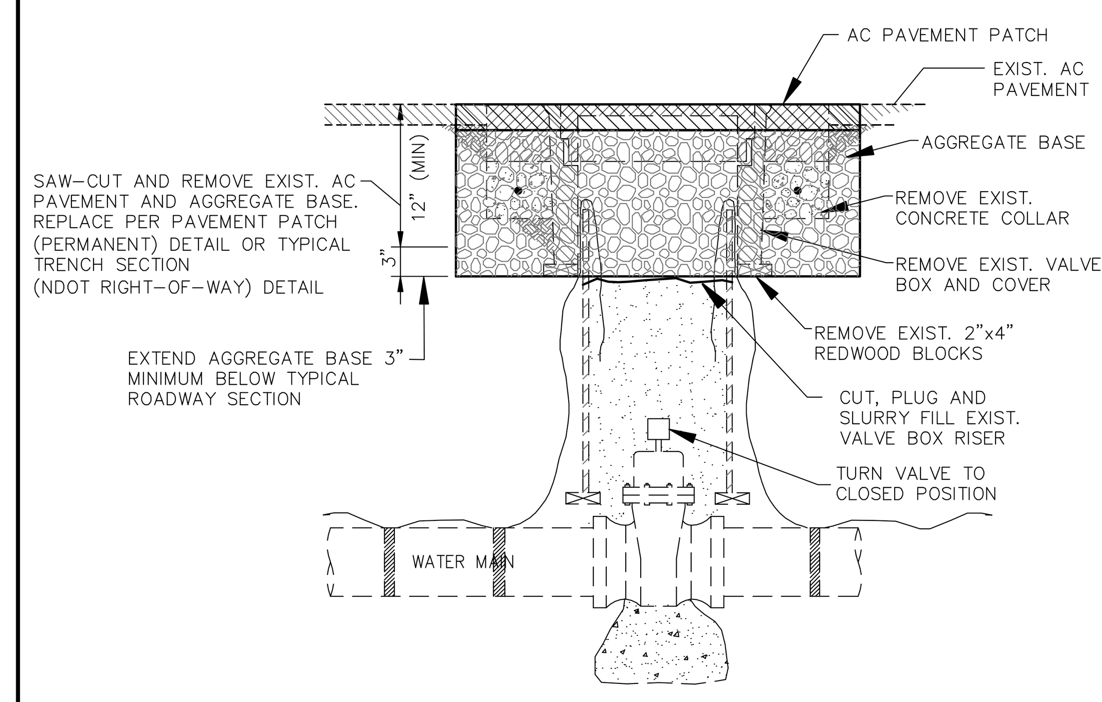

TYPICAL SECTION
NTS

NO.	REVISION	DATE	STANDARD DETAIL FOR PUBLIC WORKS CONSTRUCTION	SECTION CARSON CITY	
			VALVE ABANDONMENT	DRAWING NO. PENDING	
APPROVED BY:		4/13		DATE 3/2013	PAGE xx

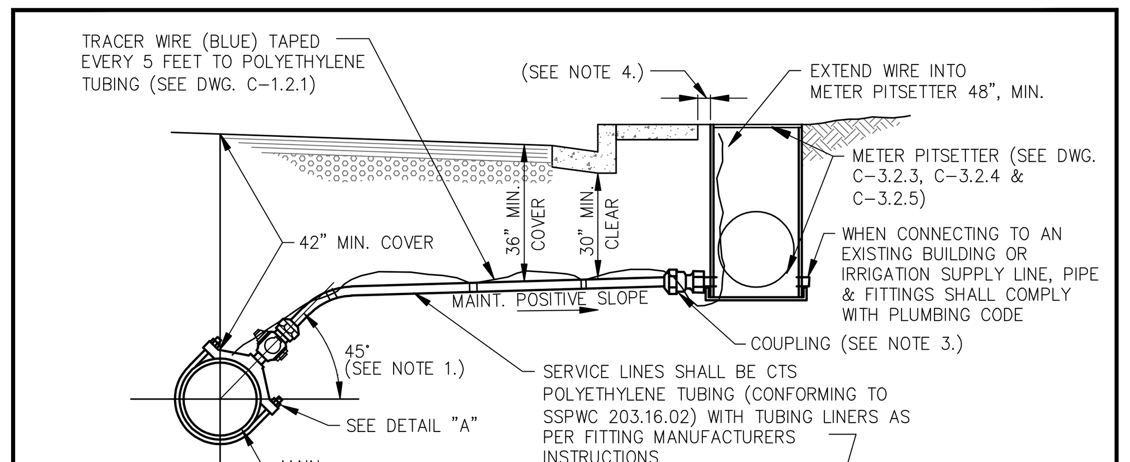

TYPICAL SECTION
NTS

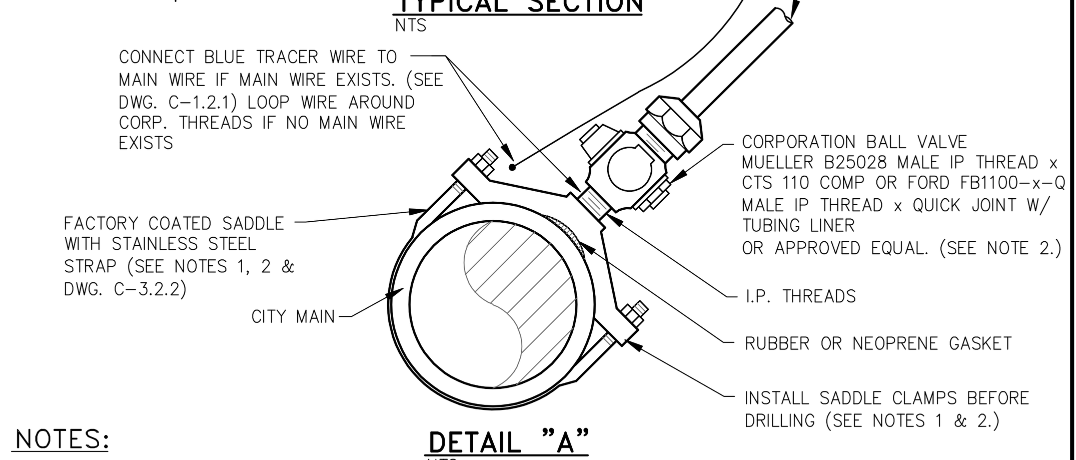

DETAIL "A"
NTS

NOTES:

1. MINIMUM DISTANCE BETWEEN TAPS AND MAINLINE FITTINGS, INCLUDING BELLS SHALL BE 18 INCHES. TAPPING SADDLE MUST BE AT 45 DEGREE ANGLE, EXCEPTIONS MUST BE APPROVED BY CARSON CITY WATER UTILITY.
2. CORPORATION VALVES AND SERVICE SADDLES SHALL CONFORM TO AWWA C800 AND BE NO LESS THAN THE SERVICE LINE SIZE. WHEN REPLACING AN EXISTING SERVICE LINE AND A SIZE LARGER THAN SHOWN IS ENCOUNTERED, THE LARGER SIZE LINE, FITTINGS AND SADDLE SHALL BE INSTALLED UNLESS APPROVED BY CARSON CITY WATER UTILITY.
3. COUPLING FITTING SHALL CONFORM TO AWWA C800 AND BE A MUELLER H–15451 CTS 110 COMP OR FORD C14–xx–Q QUICK JOINT W/ TUBING LINER x FEMALE IP THREAD OR APPROVED EQUAL.
4. METER PITSETTERS TO BE PLACED 4 INCHES FROM BACK OF SIDEWALK IN AREAS WHERE SIDEWALK IS ADJACENT TO CURB, OR 6 INCHES FROM BACK OF CURB IN AREAS WHERE SIDEWALK IS OFFSET FROM CURB, OR AS DIRECTED BY CARSON CITY WATER UTILITY. IN AREAS WHERE NO CURB OR SIDEWALK IS PRESENT, METER PITSETTERS SHALL BE PLACED WITHIN THE RIGHT–OF–WAY AS SHOWN ON THE APPROVED PLANS.
5. DISCONTINUANCE OF USE OF A SERVICE REQUIRES ABANDONMENT OF THE SERVICE. NOTIFY CARSON CITY PUBLIC WORKS FOR METER REMOVAL PRIOR TO PROCEEDING WITH ABANDONMENT. REMOVE EXISTING METER BOX AND EXPOSE CORP STOP AT MAIN FOR SHUT–OFF. ALL PIPING OR TUBING SHALL BE DISCONNECTED FROM CORP AND PLUGGED AT BOTH ENDS. CARSON CITY PUBLIC WORKS SHALL BE NOTIFIED FOR INSPECTION OF CORP ASSEMBLY PRIOR TO BACKFILLING.

NO.	REVISION	DATE	STANDARD DETAIL FOR PUBLIC WORKS CONSTRUCTION	SECTION CARSON CITY
			3/4" TO 2" WATER SERVICE	DRAWING NO. C–3.2.1 (203,307)
APPROVED BY:		07/09		DATE 7/2009

MATERIALS LIST:

1. PVC BOX MIN. WALL THICKNESS 0.300", MUELLER THERMAL–COIL METER BOX OR APPROVED EQUAL FACTORY EQUIPED AS LISTED, CONFORMING TO AWWA C800.
2. INSULATION PAD (4" THICK)
3. AIR SPACE
4. PLATFORM
5. PLATFORM SUPPORT
6. POLYBUTYLENE TUBING CLASS 250
7. I.P. THREADS
8. ALUMINUM BOTTOM
9. WATER METER(S) & TRANSPONDER(S) SUPPLIED BY CARSON CITY WATER UTILITY
10. CAST IRON LOCKING LID W/ 2" TRANSPONDER OPENING(S)
    MUELLER METER BOX SETTER LIDS
    FOR 3/4" SINGLE, PART No. TRPL–780112
    FOR 3/4" DOUBLE, PART No. TRPL–780111
    FOR 1" SINGLE, PART No. TRPL–780113
11. MUELLER LOCKABLE VALVE (NO. 14265)
12. MUELLER ANGLE CHECK VALVE
13A. INLET LINE TO BE 3/4" MIN. (SEE NOTE 1. AND DWG. C–3.2.1)
13B. INLET LINE TO BE 1" MIN. (SEE NOTE 1. AND DWG. C–3.2.1)
14. FACTORY SUPPLIED CAP TO REMAIN IN PLACE UNTIL SUPPLY LINE IS EXTENDED BY CUSTOMER
15. BLUE TRACER WIRE EXTEND INTO METER PITSETTER 48" MIN.

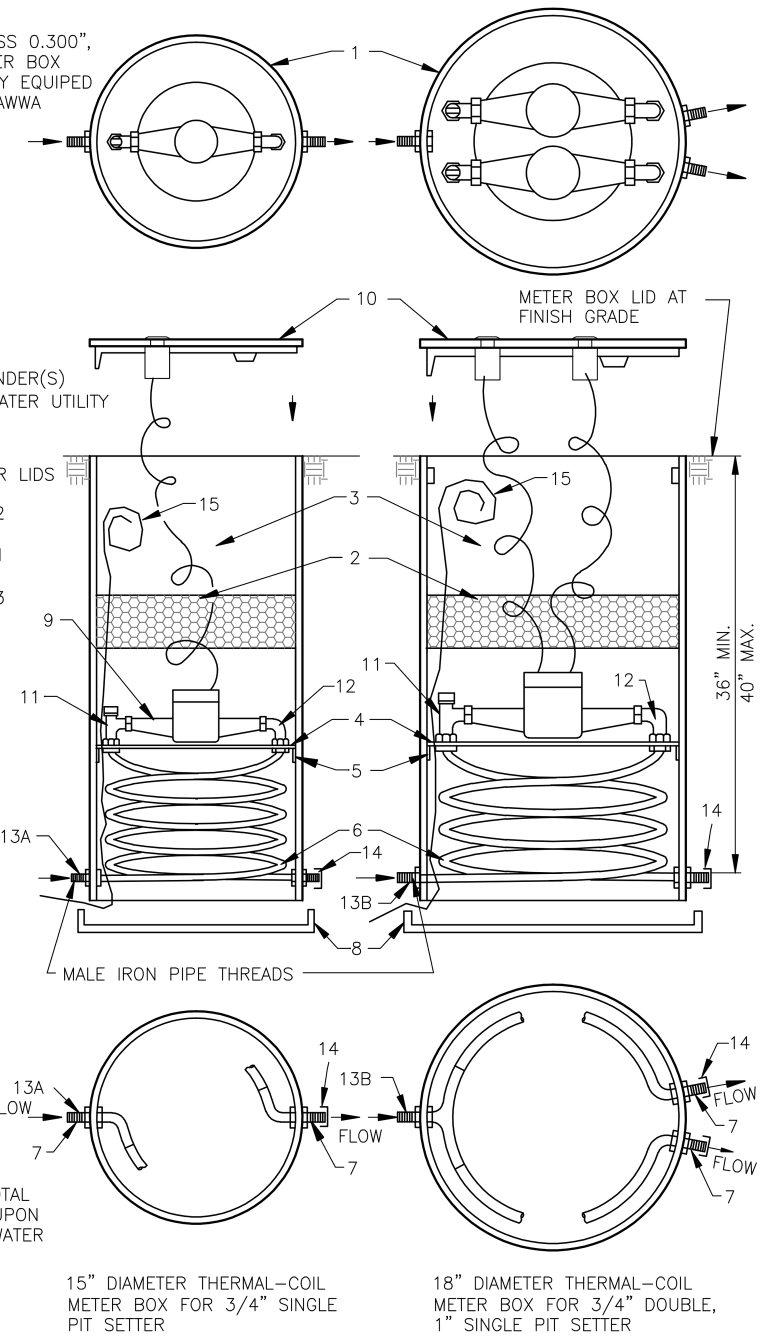

NOTES:

1. SERVICE LINE–MIN. SIZE AS SHOWN HEREON (3/4–1")
2. PIT SETTER EXTENSION, 6" TOTAL MAX. SHALL ONLY BE USED UPON APPROVAL BY CARSON CITY WATER UTILITY

NO.	REVISION	DATE	STANDARD DETAIL FOR PUBLIC WORKS CONSTRUCTION	SECTION CARSON CITY
			3/4" DOUBLE AND SINGLE PIT SETTER, 1" SINGLE PIT SETTER	DRAWING NO. C–3.2.3 (203, 307)
APPROVED BY:		7/09		DATE 7/2009

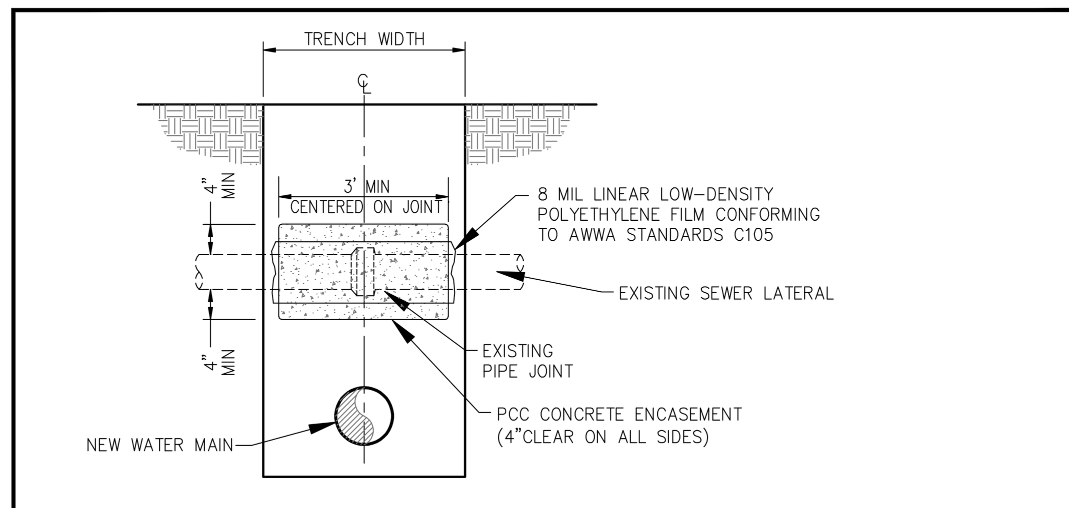

SEWER LATERAL CROSSING WATER MAIN
NTS

SPECIAL CONSTRUCTION:
NEW WATER MAIN CONSTRUCTION UNDER EXISTING SEWER LATERAL, OR LESS THAN 18 INCHES ABOVE SEWER LATERAL

CENTER WATER PIPE 10 FEET EACH SIDE OF EXISTING SEWER LATERAL CROSSING AND . MECHANICALLY RESTRAIN THE WATER MAIN JOINTS ON BOTH SIDES OF CROSSING.

NOTES:

1. IF WATER MAIN IS 18 INCHES OR GREATER ABOVE THE SEWER LATERAL, NO SPECIAL CONSTRUCTION IS REQUIRED.
2. ENCASEMENT SLURRY BACKFILL SHALL BE TYPE B (NON–EXCAVATABLE) PER TABLE 337.08.01–I OF THE STANDARD SPECIFICATIONS FOR PUBLIC WORKS CONSTRUCTION.

NO.	REVISION	DATE	STANDARD DETAIL FOR PUBLIC WORKS CONSTRUCTION	SECTION CARSON CITY
			WATER MAIN CROSSING EXISTING SANITARY SEWER LATERAL (MODIFIED)	DRAWING NO. C–3.1.2.A
APPROVED BY:		4/13		DATE 3/2013

DESIGNED BY: BD
DRAWN BY: BD
CHECKED BY: JS
DWG NO.: 4–1201KIT–SIERRA
SCALE (HORIZ): N/A
SCALE (VERT): X"=XX'
PLOT DATE: 2013 JULY 18

CARSON CITY PUBLIC WORKS DEPARTMENT
3505 BUTTI WAY CARSON CITY, NEVADA 89701
PH: 887–2355 FAX; 887–2112

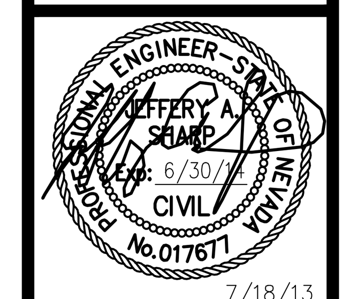

7/18/13

REV.	DATE	DESCRIPTION	BY	APP'D

KIT SIERRA WAY WATER MAIN REPLACEMENT
PROJECT No. 4.1201

DETAILS

SHEET 5 OF 6

BID SET - NOT FOR CONSTRUCTION

H:\PROJECTS\4.1201 Waterline Replacement\dwg\4-1201KIT-SIERRA.dwg;

1. WATER MAIN SHUTDOWNS/INTERRUPTION OF WATER/FIRE SERVICE: OBTAIN TENTATIVE APPROVAL FROM CARSON CITY WATER UTILITY PRIOR TO PLANNING A SHUTDOWN. APPROVAL IS REQUIRED ONE WORKING DAY PRIOR TO NOTIFICATION OF CUSTOMERS. COMMERCIAL CUSTOMERS SHALL RECEIVE 2 WORKING DAYS WRITTEN AND VERBAL NOTICE OF A SHUTDOWN. SPECIAL ARRANGEMENTS INCLUDING NIGHT TIME SHUTDOWNS MAY BE REQUIRED OF THE CONTRACTOR TO ACCOMMODATE CUSTOMER OPERATIONS. RESIDENTIAL CUSTOMERS SHALL RECEIVE 24 HOURS WRITTEN NOTICE. WHEN WORK IS PERFORMED BY CITY STAFF, THE CITY IS RESPONSIBLE FOR THE NOTIFICATION. THE CONTRACTOR IS RESPONSIBLE IN ALL OTHER CASES. A LIST SHALL BE KEPT BY THE RESPONSIBLE PARTY LISTING THE DATE, TIME AND ADDRESS OF ALL PERSONS NOTIFIED. THE PERSON NOTIFIED SHALL BE INCLUDED ON THE LIST FOR ALL COMMERCIAL CUSTOMERS. CONTACT CARSON CITY WATER UTILITY FOR PHONE NUMBERS WHEN COMMERCIAL CUSTOMERS CANNOT BE LOCATED. THE CONTRACTOR WILL BE SUBJECT TO DAMAGE CLAIMS SHOULD THEY FAIL TO NOTIFY CUSTOMERS OR MAINTAIN DOCUMENTATION OF NOTIFICATION OF CUSTOMERS. THE TOTAL TIME OF ANY WATER SERVICE INTERRUPTION IS LIMITED TO 4 HOURS MAXIMUM. THE CONTRACTOR SHALL NOT OPERATE ANY EXISTING WATER VALVES. WATER MAIN SHUTDOWNS WILL ONLY BE SCHEDULED FOR TUESDAYS, WEDNESDAYS, OR THURSDAYS, EXCLUDING THE WORKING DAYS BEFORE AND AFTER A HOLIDAY. CONTRACTOR SHALL MAKE A WRITTEN REQUEST, TO THE WATER OPERATIONS CHIEF, A MINIMUM OF 10 CALENDAR DAYS IN ADVANCE OF ANY PLANNED SHUTDOWN.
2. WATER MAINS (6 INCH THRU 12 INCH) SHALL BE PVC C900, DR 18 (MINIMUM WALL THICKNESS) UNLESS HIGHER PRESSURE IS SPECIFIED ON THE PLANS. WATER SERVICES 2 INCHES OR LESS SHALL BE CTS, PE TUBING MINIMUM 200 PSI; WATER SERVICES 3 INCHES OR GREATER SHALL BE 4 INCH MINIMUM DIAMETER PVC C900, DR 18 OR AS SPECIFIED ON THE PLANS.
3. MAINTAIN 18 INCHES VERTICAL AND 5 FEET HORIZONTAL SEPARATION BETWEEN WATER LINES AND ALL UNDERGROUND POWER LINES. IF WATER LINE IS BELOW POWER LINE OR IS WITHIN 18 INCH VERTICAL SEPARATION OF POWER LINE, POWER LINE SHALL BE ENCASED WITH 4 INCHES MINIMUM OF CONCRETE EXTENDING 5 FEET EACH SIDE OF CROSSING. (SEE NV ENERGY SPECS.) CONCRETE ENCASEMENT OF WATER LINES IS NOT ALLOWED.
4. ALL HOT TAPS, GREATER THAN 2 INCHES AND LESS THAN 14 INCHES, ARE TO BE PERFORMED BY CARSON CITY WATER UTILITY. THE CONTRACTOR SHALL CONTACT THE WATER OPERATIONS CHIEF AT LEAST 2 WORKING DAYS PRIOR TO SCHEDULING HOT TAP DATE AND TIME (HOT TAPS ARE PERFORMED TUESDAY THRU THURSDAY EXCLUDING THE WORKING DAYS BEFORE AND AFTER A HOLIDAY). PRIOR TO HOT TAPPING, THE SADDLE SHALL BE HYDROSTATICALLY PRESSURE TESTED TO 150 PSI MINIMUM OR THE DESIGN OF PIPE SYSTEM FOR A MINIMUM OF 5 MINUTES. THE TEST SHALL BE PERFORMED IN THE PRESENCE OF THE WATER UTILITY PERSONNEL PRIOR TO PERFORMING THE TAP.
5. WATER VALVE MARKERS SHALL BE BLUE CARSONITE UTILITY MARKER (CUM-375), 5 FEET-2 INCHES (5'-2") WITH CARSON CITY WATER VALVE DECAL (CWV-116) OR APPROVED EQUAL. PLACE MARKER NO MORE THAN 5 FEET FROM THE VALVE OR AS DIRECTED BY THE CARSON CITY INSPECTOR.
6. REDUCED PRESSURE PRINCIPLE AND DOUBLE CHECK VALVE BACKFLOW ASSEMBLIES SHALL BE APPROVED BY THE CARSON CITY INSPECTOR, AND TESTED BY A CERTIFIED BACKFLOW ASSEMBLY TESTER, AND TEST RESULTS SHALL BE APPROVED BY CARSON CITY WATER UTILITY. FOR NEW WATER METER SETS, THE REQUIRED BACKFLOW PREVENTION ASSEMBLY SHALL BE INSTALLED, INSPECTED, APPROVED AND CERTIFIED TEST RESULTS PROVIDED TO THE CARSON CITY INSPECTOR WITHIN 5 DAYS OF METER SET, UNLESS THE CARSON CITY ENGINEER OR PUBLIC WORKS DIRECTOR APPROVES OTHERWISE. THE SERVICE WILL BE LOCKED OFF IF INSPECTIONS AND CERTIFICATIONS ARE NOT COMPLETED AS SPECIFIED ABOVE. A 25 DOLLAR FEE WILL BE ASSESSED AT TIME OF TURN-ON WHEN LOCK IS REMOVED DURING NORMAL WORKING HOURS. THE FEE WILL BE ASSESSED ON THE BUILDING PERMIT FOR THE INSTALLATION OF THE BACKFLOW DEVICE.
7. ALL WATER MAIN, WATER/FIRE SERVICE, AND BACKFLOW PREVENTION INSPECTIONS AND TESTING MUST BE APPROVED PRIOR TO APPROVAL OF ANY CERTIFICATE OF OCCUPANCY.
8. DISINFECTION TABLETS SHALL BE PLACED USING TITEBOND MULTI-PURPOSE CLEAR 100%%% SILICONE OR APPROVED EQUAL FOOD GRADE SILICONE

NO.	REVISION	DATE	STANDARD DETAIL FOR PUBLIC WORKS CONSTRUCTION	SECTION CARSON CITY
			WATER GENERAL NOTES (MODIFIED)	DRAWING NO. C-3.1.1 (307)
APPROVED BY:		07/09		DATE 7/2009

MATERIAL SPECIFICATIONS

SHELL: 304 STAINLESS STEEL

LUGS: 304 STAINLESS STEEL

BOLTS, WASHERS AND NUTS: NC ROLLED THREAD 304 STAINLESS STEEL, 5/8" DIAMETER.

GASKETS: VIRGIN SBR COMPOUNDED FOR WATER SERVICE. ASTM D2000-80MA 4AA607 FULL GASKET. 360° PIPE COVERAGE 150 PSI MIN. WORKING PRESSURE.

FLANGE: 304 STAINLESS STEEL OR HIGH TENSILE DUCTILE (NODULAR) IRON, ASTM A536-80, GRADE 65-45-12.

NOM. FLANGE	A	B	C	NO. BOLTS
4	4"	5-1/32"	16"	10
6*	4-1/2"	7-1/32"	16"	10
8*	4"	9-1/32"	20"	14
10	5-1/2"	11-1/32"	24"	16
12**	6-1/2"	13-1/32"	30"	30

*TAPPING SLEEVES IN THE 24" NOMINAL PIPE SIZE RANGE WITH 6" OR 8" FLANGES ARE 24" LONG (C-DIMENSION) AND HAVE 24" BOLTS.

**TAPPING SLEEVES IN THE 12" & 14" NOMINAL PIPE SIZE RANGE W/ 12" FLANGE ARE 24" LONG AND HAVE 24 BOLTS.

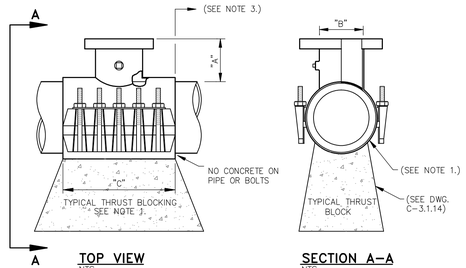

TOP VIEW
NTS

SECTION A-A
NTS

NOTES:

1. MATERIAL USED FOR THRUST BLOCKING SHALL NOT PREVENT ACCESS TO THE BOLT ASSEMBLY.
2. POTABLE WATER HOT TAPS GREATER THAN 2 INCHES AND LESS THAN 14 INCHES SHALL BE PERFORMED BY CARSON CITY WATER UTILITY.
3. MINIMUM DISTANCE BETWEEN TAP SADDLE, COLLARS, JOINTS, SERVICE TAPS, ETC. SHALL BE 18 INCHES CLEAR.
4. SADDLE TO BE HYDROSTATICALLY PRESSURE TESTED BY THE CONTRACTOR, TO 150 PSI (MIN.) FOR A MINIMUM OF 5 MINUTES, WITNESSED BY CARSON CITY WATER UTILITY, PRIOR TO PERFORMING TAP.
5. REFERENCE "WATER GENERAL NOTES" DWG. C-3.1.1, FOR HOT-TAP SCHEDULING INFORMATION.

NO.	REVISION	DATE	STANDARD DETAIL FOR PUBLIC WORKS CONSTRUCTION	SECTION CARSON CITY
			TAPPING SLEEVE	DRAWING NO. C-3.1.3 (203,307)
APPROVED BY:		07/09		DATE 7/2009

TYPE OF FITTING	90° BEND	45° BEND	11 1/4° OR 22 1/2° BEND	TEE OR DEAD END
TYPICAL INSTALLATION	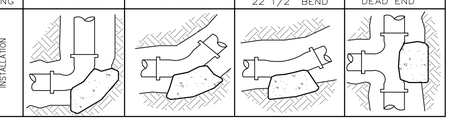			

THRUST BLOCK BEARING AREA (SQ. FT.)

TYPE OF FITTING / SIZE OF PIPE	90° BEND	45° BEND	11 1/4° OR 22 1/2° BEND	TEE OR DEAD END	TEE W/PLUG	CROSS W/PLUG
4"	2	1	1	2	2	2
6"	4	4	2	4	4	4
8"	7	4	2	5	7	7
10"	12	6	3	8	12	12
12"	16	10	5	12	16	16
14"	20	12	6	14	20	20
16"	27	15	8	18	27	27
18"	45	25	13	32	45	45
24"	65	35	18	46	65	65

TYPE OF FITTING	CROSS W/PLUG	TEE W/PLUG
TYPICAL INSTALLATION	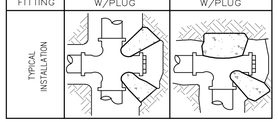	

NOTES:

1. THRUST BLOCKS TO BE CONSTRUCTED OF CONCRETE CONFORMING TO 337.10 OF THE SSPWC AND SHALL HAVE A MINIMUM COMPRESSIVE STRENGTH OF 4000 PSI @ 28 DAYS.
2. AREAS GIVEN ARE FOR CLASS 150 PIPE AT WORKING AND TESTING PRESSURE OF 150 P.S.I., WITH 2000 P.S.F. BEARING CAPACITY. INSTALLATIONS USING DIFFERENT PIPE, TEST PRESSURES, AND/OR SOIL TYPES SHOULD HAVE AREAS ADJUSTED ACCORDINGLY, SUBJECT TO THE APPROVAL OF THE CARSON CITY ENGINEER OR PUBLIC WORKS DIRECTOR.
3. THRUST BLOCKS SHALL BE POURED AGAINSTALL UNDISTURBED SOIL.
4. JOINTS, FLANGES, NUTS, BOLTS AND FACE OF PLUG SHALL BE KEPT CLEAR OF CONCRETE.

NO.	REVISION	DATE	STANDARD DETAIL FOR PUBLIC WORKS CONSTRUCTION	SECTION CARSON CITY
			THRUST BLOCKS	DRAWING NO. C-3.1.14
APPROVED BY:		07/09		DATE 7/2009

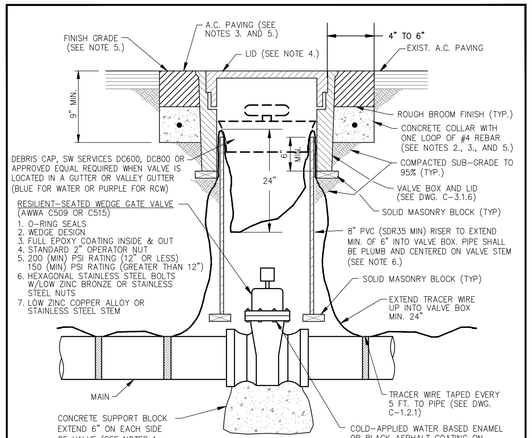

TYPICAL SECTION
NTS

NOTES:

1. SUPPORT BLOCKING SHALL BE POURED AGAINSTALL UNDISTURBED SOIL AND NOT PREVENT ACCESS TO BOLT ASSEMBLY OR VALVE JOINTS.
2. CONCRETE SHALL CONFORM TO THE SSPWC SECTION 337.10. REBAR SHALL ONLY BE USED WHEN THE VALVE BOX IS LOCATED OUTSIDE PAVED AREAS.
3. THE CONCRETE COLLAR SHALL BE LEFT 2 1/2 INCHES - 3 INCHES BELOW FINISHED ASPHALT SURFACE. APPLY AN APPROVED TACK COAT (CONFORMING TO THE SSPWC SECTION 316) AND FILL VOID BETWEEN ADJACENT PAVEMENT AND FRAME WITH TYPE 3 PG 64-22 PAVING (CONFORMING TO THE SSPWC SECTION 320). APPLY FOG SEAL (CONFORMING TO THE SSPWC SECTION 317) TO THE ASPHALT SURFACE. ALL CUTS IN PAVING SHALL BE STRAIGHT AND EVEN. EXCEPTION: WHEN STRUCTURE NOT LOCATED IN ASPHALT PAVEMENT OR IN AN UNPAVED AREA, EXTEND CONCRETE TO FINISH GRADE.
4. LIDS SHALL BE SET FLUSH WITH FINISH GRADE UNLESS OTHERWISE NOTED.
5. WHEN LOCATED IN NDOT RIGHT-OF-WAY, CONCRETE COLLAR SHALL CONFORM TO NDOT STANDARD PLAN SHT R-4.3.3 AND STANDARD SPECIFICATION 609.
6. RISER COLOR SHALL BE BLUE, OR SAME COLOR AS MAIN FOR WATER APPLICATIONS, PURPLE FOR RECLAIMED WATER APPLICATIONS, AND GREEN FOR SANITARY SEWER APPLICATIONS.
7. VALVES ON FIRE LINES SHALL BE UL/FM APPROVED AND MEET ALL APPLICABLE NFPA REQUIREMENTS.

NO.	REVISION	DATE	STANDARD DETAIL FOR PUBLIC WORKS CONSTRUCTION	SECTION CARSON CITY
			GATE VALVE	DRAWING NO. C-3.1.4 (203,307)
APPROVED BY:		07/09		DATE 7/2009

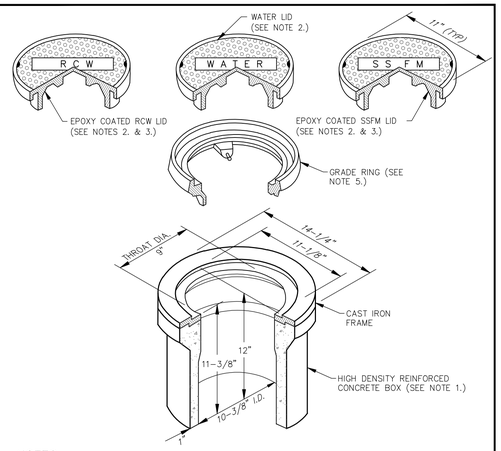

NOTES:

1. VALVE BOX AND LID SHALL BE H20 TRAFFIC RATED WITH A MINIMUM INSIDE DIAMETER OF 10 INCHES (CHRISTY G5 TRAFFIC VALVE BOX & LID).
2. CAST IRON LID SHALL BE MARKED AT THE FACTORY "WATER" FOR WATER APPLICATIONS, "RECLAIMED WATER" OR "RCW" FOR RECLAIMED WATER APPLICATIONS, AND "SS FORCE MAIN" OR "SSFM" FOR SANITARY SEWER APPLICATIONS.
3. FOR RECLAIMED WATER AND SANITARY SEWER APPLICATIONS, CAST IRON LID SHALL BE EPOXY COATED AT THE FACTORY, OR POWDER COATED, COLOR SHALL BE PURPLE FOR RECLAIMED WATER APPLICATIONS AND GREEN FOR SANITARY SEWER APPLICATIONS.
4. VALVE BOX SHALL BE SET OR ADJUSTED TO GRADE PER DRAWING NO. C-3.1.4, RISER FOR ADJUSTED VALVE BOX SHALL BE PER DRAWING NO. C-3.1.4. FOR OVERLAY ADJUSTMENTS, RISER WILL NOT REQUIRE REPLACEMENT OR EXTENSION IF IT EXTENDS A MINIMUM OF 2 INCHES INTO ADJUSTED VALVE BOX.
5. GRADE RING IS NOT ALLOWED FOR NEW VALVE BOX INSTALLATIONS. CAST IRON GRADE RING (CHRISTY G5 GRADE RING) MAY BE USED FOR OVERLAY ADJUSTMENTS WHEN OVERLAY DEPTH EQUALS THE GRADE RING DEPTH. NO MORE THAN ONE GRADE RING ALLOWED PER BOX.

NO.	REVISION	DATE	STANDARD DETAIL FOR PUBLIC WORKS CONSTRUCTION	SECTION CARSON CITY
			VALVE BOX & LID	DRAWING NO. C-3.1.6 (203,306,307)
APPROVED BY:		07/09		DATE 7/2009

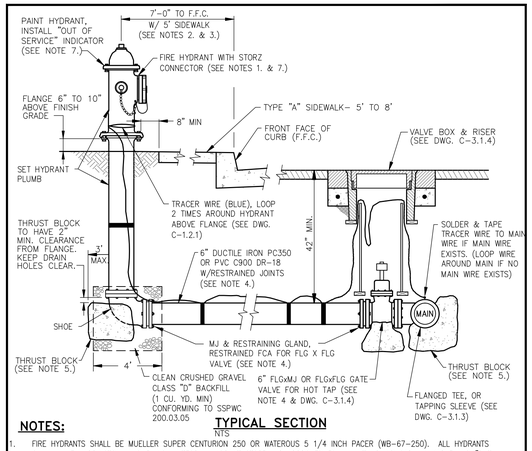

TYPICAL SECTION
NTS

NOTES:

1. FIRE HYDRANTS SHALL BE MUELLER SUPER CENTURION 250 OR WATEROUS 5 1/4 INCH PACER (WB-67-250). ALL HYDRANTS SHALL HAVE HARRINGTON HIHS 5 INCH INTEGRAL HYDRANT STORZ, OR APPROVED EQUAL, WITH BLIND CAP & CABLE AND "OUT OF SERVICE" INDICATOR. OPERATING NUT SHALL BE 1-1/2 INCH PENTAGON. VALVE OPENING SHALL BE 5-1/4 INCHES AND OPEN COUNTER-CLOCKWISE. HYDRANTS SHALL HAVE (2) 2-1/2 INCH HOSE NOZZLES WITH AMERICAN NATIONAL HOSE COUPLING THREADS, (NO SUBSTITUTIONS).
2. HYDRANT SHALL BE INSTALLED SO AS TO PROVIDE **CLEARANCE** IN ALL DIRECTIONS PER **DWG. C-3.1.7.1.**
3. FOR 9 FEET-0 INCHES OR WIDER SIDEWALK OR OFFSET SIDEWALK, HYDRANT SHALL BE 2 FEET-0 INCHES TO FRONT FACE OF CURB. IF SIDEWALK IS NOT PRESENT, HYDRANT SHALL BE LOCATED 7 FEET-0 INCHES TO FRONT FACE OF CURB, EXCEPT IN DOWNTOWN AREA.
4. RESTRAINING GLANDS SHALL BE ROMAC GRIPRING PIPE RESTRAINER FOR MECHANICAL JOINT VALVES OR ROMAC RESTRAINED FCA FOR FLANGED VALVES OR APPROVED EQUAL. PIPE RESTRAINT SHALL BE ROMAC "600" SERIES RESTRAINING SYSTEM OR APPROVED EQUAL. RESTRAINING DEVICES SHALL BE FULL CIRCLE (NON POINT) LOADING TYPE. HYDRANT SHOE MAY BE AQUAGRIP, RESTRAINED MECHANICAL JOINT (MJ) OR APPROVED EQUAL.
5. THRUST BLOCKS SHALL HAVE THREE (3) SQUARE FEET MINIMUM AREA AND SHALL BE FORMED AGAINSTALL UNDISTURBED NATIVE OR BACKFILL COMPACTED TO 95%, AND CONFORM TO DWG. C-3.1.14. NO CONCRETE ON HYDRANT DRAIN HOLES OR BOLTS.
6. INSPECTION BY THE CARSON CITY INSPECTOR SHALL BE REQUIRED PRIOR TO BACKFILLING.
7. HYDRANTS SHALL BE PAINTED INTERNATIONAL ORANGE (RUST-OLEUM 7400 HIGH GLOSS ALKYD ENAMEL OR APPROVED EQUAL). DO NOT PAINT 5 INCH STORZ, CAP OR CABLE. RECLAIMED WATER HYDRANTS SHALL BE PAINTED PURPLE. INSTALL "OUT OF SERVICE" INDICATOR COLLAR ON 2-1/2 INCH NOZZLE. INDICATOR SHALL BE HIGHLY VISIBLE, YELLOW WITH BLACK LETTERS, 2-1/2 INCH MINIMUM WIDTH WITH 1 INCH LETTERS STATING "OUT OF SERVICE". INDICATOR SHALL BE "CALPICO" OR EQUAL APPROVED BY THE CARSON CITY ENGINEER OR PUBLIC WORKS DIRECTOR.

NO.	REVISION	DATE	STANDARD DETAIL FOR PUBLIC WORKS CONSTRUCTION	SECTION CARSON CITY
			FIRE HYDRANT ASSEMBLY	DRAWING NO. C-3.1.7 (203,307)
APPROVED BY:		07/09		DATE 7/2009

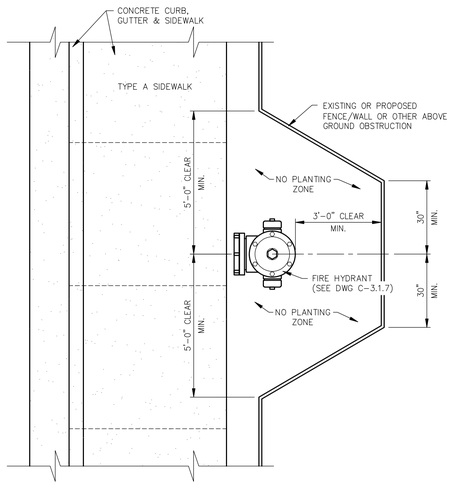

NOTES:

1. SEE DWG. C-3.1.7 FOR FIRE HYDRANT INSTALLATION.
2. INSTALL OR RELOCATE EXISTING FENCE/WALL/LANDSCAPING/MISC IMPROVEMENTS ETC. TO PROVIDE THE MINIMUM CLEARANCE AROUND THE HYDRANT AS SHOWN.

NO.	REVISION	DATE	STANDARD DETAIL FOR PUBLIC WORKS CONSTRUCTION	SECTION CARSON CITY
			FIRE HYDRANT SETBACK /FENCE CLEARANCE	DRAWING NO. C-3.1.7.1 (307)
APPROVED BY:		07/09		DATE 7/2009

DESIGNED BY: BD
DRAWN BY: BD
CHECKED BY: JS
DWG NO.: 4-1201KIT-SIERRA
SCALE (HORIZ): N/A
SCALE (VERT): X"=XX'
PLOT DATE: 2013 JULY 18

CARSON CITY
PUBLIC WORKS DEPARTMENT
3505 BUTTI WAY CARSON CITY, NEVADA 89701
PH: 887-2355 FAX: 887-2112

PROFESSIONAL ENGINEER - STATE OF NEVADA
JEFFERY A. SAURE
Exp. 6/30/14
CIVIL
No. 017677
7/18/13

REV.	DATE	DESCRIPTION	BY	APP'D

KIT SIERRA WAY
WATER MAIN REPLACEMENT
PROJECT No. 4.1201

DETAILS

SHEET 6 OF 6

BID SET - NOT FOR CONSTRUCTION

H:\PROJECTS\4.1201 Waterline Replacement\dwg\4-1201KIT-SIERRA.dwg

MAYFLOWER & BEL AIRE WAY WATER MAIN REPLACEMENT

CARSON CITY, NEVADA

PROJECT 4.1201

BOARD OF SUPERVISORS

Bob Crowell	Mayor
Karen Abowd	Supervisor
Brad Bonkowski	Supervisor
John McKenna	Supervisor
Jim Shirk	Supervisor
Alan Glover	City Clerk

DESIGNED FOR:

CARSON CITY PUBLIC WORKS DEPARTMENT
OPERATIONS DIVISION
3505 BUTTI WAY
CARSON CITY, NV 89701
887-2355

GENERAL NOTES:

1. ALL WORK SHALL CONFORM TO THE AMERICAN WATER WORKS ASSOCIATION (AWWA) STANDARDS PER NAC 445A.67145 (1)(a) AND THE "STANDARD SPECIFICATIONS FOR PUBLIC WORKS CONSTRUCTION" (SSPWC) AND THE "STANDARD DETAILS FOR PUBLIC WORKS CONSTRUCTION" (SDPWC) AS ADOPTED BY CARSON CITY. THE CONTRACTOR SHALL OBTAIN A PERMIT FOR PUBLIC WORKS CONSTRUCTION FROM THE CARSON CITY PERMIT CENTER PRIOR TO THE START OF CONSTRUCTION.
2. ALL TRAFFIC CONTROL AND BARRICADING WITHIN THE CARSON CITY RIGHT-OF-WAY SHALL CONFORM TO SECTION 100.33, 332.04 AND 332.05 OF THE STANDARD SPECIFICATIONS, PART VI OF THE MANUAL ON UNIFORM TRAFFIC CONTROL DEVICES, LATEST EDITION, AND THE UNR T2 CENTER, TEMPORARY TRAFFIC CONTROL GUIDELINES LATEST EDITION. A TRAFFIC CONTROL PLAN MUST BE SUBMITTED AND APPROVED BY THE CARSON CITY ENGINEERING DIVISION PRIOR TO ANY STREET CLOSURES.
3. THE CONTRACTOR SHALL CALL UNDERGROUND SERVICE ALERT "CALL BEFORE YOU DIG" (811) OR (1-800-227-2600) AT LEAST TWO (2) WORKING DAYS PRIOR TO START OF CONSTRUCTION AND COMPLY WITH THE REQUIREMENTS OF NRS AND NAC 455 THROUGHOUT THE COURSE OF THE WORK, SEWER SERVICE LATERALS ARE NOT OWNED OR MARKED BY CARSON CITY.
4. THE CONTRACTOR SHALL CALL THE CARSON CITY ENGINEERING DIVISION (887-2300) TWO (2) WORKING DAYS PRIOR TO THE START OF CONSTRUCTION. THE CONTRACTOR SHALL CALL ONE (1) WORKING DAY PRIOR TO REQUIRED INSPECTIONS AND TESTING. THE REQUIRED INSPECTIONS AND TESTING ARE LISTED ON THE INSPECTION RECORD ISSUED WITH EACH PERMIT. THE CONTRACTOR MUST HAVE THE PERMIT NUMBER AND THE DESCRIPTION LISTED ON THE INSPECTION RECORD TO SCHEDULE REQUIRED INSPECTIONS AND TESTING. FOR CITY CONTRACTED PROJECTS, THE CONTRACTOR SHALL SCHEDULE INSPECTIONS PER THE CONTRACT DOCUMENTS.
5. FINAL INSPECTIONS WILL BE PERFORMED BY CARSON CITY ENGINEERING DIVISION ACCORDING TO THE CARSON CITY INSPECTIONS AND TESTING PROCEDURES. NOTE: THESE PROCEDURES REQUIRE SUBMITTAL OF RECORD DRAWING PRINTS BY THE CONTRACTOR AND 10 WORKING DAYS TO PREPARE A FINAL PUNCH LIST. ALL CONDITIONS OF THE FINAL INSPECTION MUST BE COMPLETED PRIOR TO FINAL ACCEPTANCE OR ANY APPROVAL OF A CERTIFICATE OF OCCUPANCY BY THE CARSON CITY ENGINEERING DIVISION.
6. MODIFICATIONS TO THE APPROVED PLANS REQUIRES REVIEW AND APPROVAL BY THE CARSON CITY ENGINEERING DIVISION. WORK PERFORMED WITHOUT WRITTEN APPROVAL BY CARSON CITY ENGINEERING WILL REQUIRE REMOVAL AT THE CONTRACTORS EXPENSE.
7. THE APPROVED PLAN, PERMIT AND INSPECTION RECORD MUST BE ON THE JOB SITE AT ALL TIMES.
8. PLAN APPROVAL FOR SEWER AND WATER CONSTRUCTION SHALL EXPIRE ONE YEAR FROM DATE OF APPROVAL UNLESS CONSTRUCTION HAS BEEN INITIATED. (CCMC 12.06.180F, 12.01.140D)
9. THE CONTRACTOR WILL BE SOLELY AND COMPLETELY RESPONSIBLE FOR ACQUIRING A STORMWATER DISCHARGE PERMIT FROM THE NEVADA DIVISION OF ENVIRONMENTAL PROTECTION (NDEP) INCLUDING DEVELOPING, SUBMITTING AND IMPLEMENTING A STORM WATER POLLUTION PREVENTION PLAN (SWPPP). THE CONTRACTOR SHALL DEVELOP, PLACE AND MAINTAIN STORM WATER PROTECTION DEVICES IN COMPLIANCE WITH THE NEVADA CONTRACTORS FIELD GUIDE FOR CONSTRUCTION SITE BEST MANAGEMENT PRACTICES (JUNE 2008).
10. THE LOCATION OF EXISTING UTILITIES SHOWN ON THESE DRAWINGS IS BASED ON THE BEST INFORMATION AVAILABLE TO THE ENGINEER. IT SHALL BE THE CONTRACTORS' RESPONSIBILITY TO VERIFY THESE LOCATIONS AT THE PROPOSED POINTS OF CONNECTIONS AND IN AREAS OF POSSIBLE CONFLICT WITH NEW UTILITY INSTALLATION, PRIOR TO BEGINNING CONSTRUCTION. POTHOLING IS REQUIRED. SHOULD THE CONTRACTOR FIND ANY DISCREPANCIES BETWEEN THE CONDITIONS EXISTING IN THE FIELD AND THE INFORMATION SHOWN ON THESE DRAWINGS, HE SHALL NOTIFY THE ENGINEER BEFORE PROCEEDING WITH CONSTRUCTION.
11. THE CONTRACTOR WILL BE SOLELY AND COMPLETELY RESPONSIBLE FOR THE CONDITIONS OF THE JOB SITE, INCLUDING SAFETY OF ALL PERSONS AND PROPERTY DURING PERFORMANCE OF THE WORK. THIS REQUIREMENT WILL APPLY CONTINUOUSLY AND NOT BE LIMITED TO NORMAL WORKING HOURS. THE CONTRACTOR SHALL BE RESPONSIBLE FOR THE DESIGN AND CONSTRUCTION OF PROPER SHORING OF TRENCHES IN ACCORDANCE WITH OCCUPATIONAL SAFETY LAWS. THE DUTIES OF THE ENGINEER DO NOT INCLUDE REVIEW OF THE ADEQUACY OF THE CONTRACTOR'S SAFETY IN, ON, OR NEAR THE CONSTRUCTION SITE.
12. SHOULD IT APPEAR THAT THE WORK TO BE DONE, OR ANY MATTER RELATIVE THERETO, IS NOT SUFFICIENTLY DETAILED OR EXPLAINED ON THESE PLANS, THE CONTRACTOR SHALL CONTACT THE ENGINEER FOR SUCH FURTHER EXPLANATIONS AS MAY BE NECESSARY.
13. ALL PVC WATER PIPELINES SHALL BE PRESSURE TESTED IN ACCORDANCE WITH AWWA STANDARD C605 PER NAC 445A.67145 (7)(b) PRIOR TO BEING FLUSHED, DISINFECTED OR SAMPLED FOR AN ANALYSIS OF WATER QUALITY. ALL PVC WATER PIPELINES ARE TO BE DISINFECTED ACCORDING TO AWWA STANDARD C651 PER NAC 445A.67145 (6)(a).

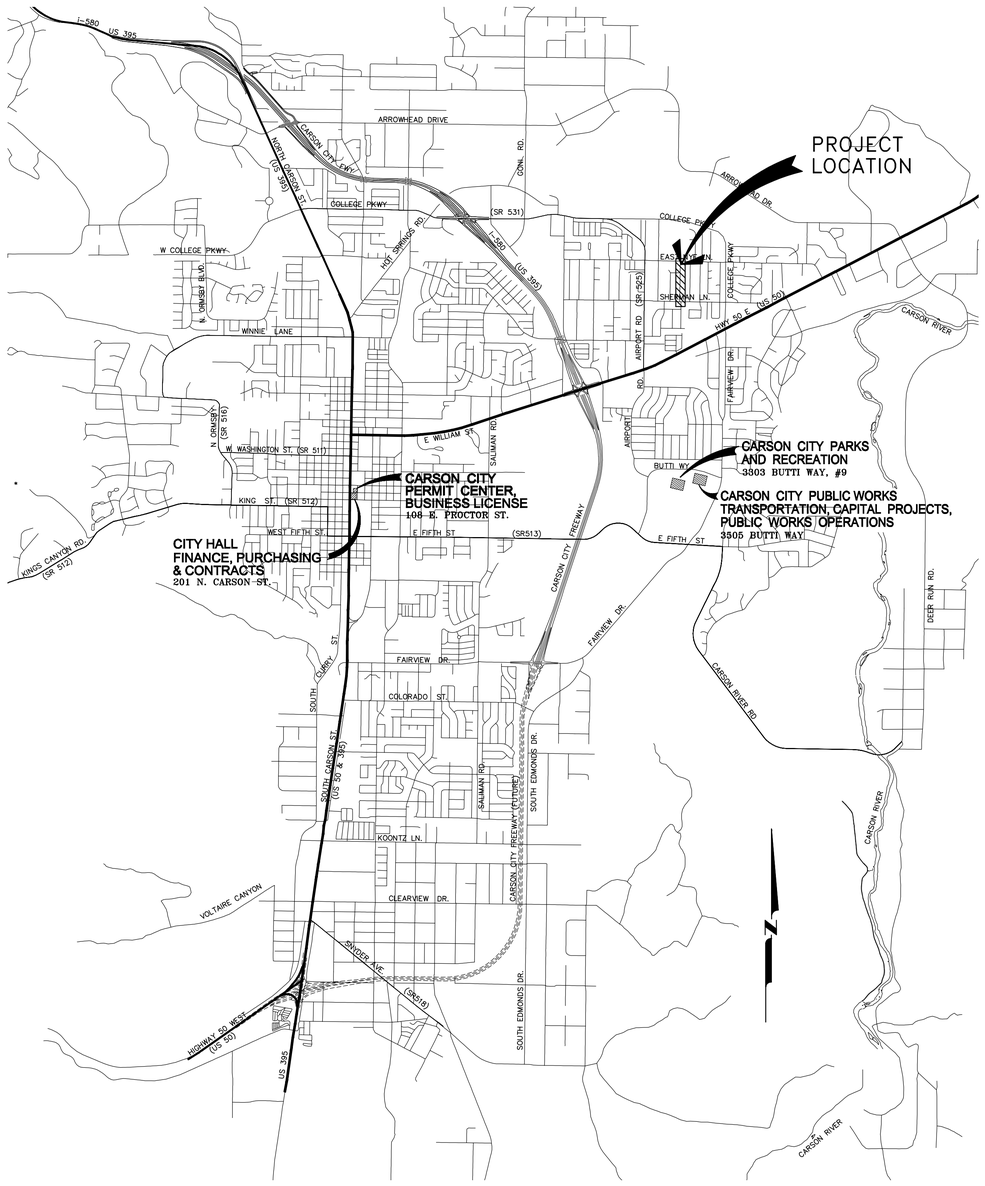

VICINITY MAP

N.T.S.

SHEET INDEX

1 ..... TITLE SHEET
2 ..... INDEX SHEET & STORMWATER PROTECTION PLAN
3 ..... PLAN & PROFILE – MAYFLOWER WAY (STA 10+00 to STA 16+00)
4 ..... PLAN & PROFILE – MAYFLOWER WAY (STA 16+00 to STA 23+50)
5 ..... PLAN & PROFILE – BEL AIRE WAY (STA 30+00 to STA 33+50)
6 ..... DETAILS
7 ..... DETAILS

REVIEWED FOR CITY REQUIREMENTS:

DARREN SCHULZ, P.E. – DEPUTY PUBLIC WORKS DIRECTOR DATE

Call before you Dig
Avoid cutting underground utility lines. It's costly.
Call 811 OR 1-800-227-2600

APPLICATION NO. _____

DESIGNED BY: BD
DRAWN BY: BD
CHECKED BY: JS
DWG NO.: 4-1201MAFLWR-TS1.DWG
SCALE (HORIZ): N/A
SCALE (VERT): N/A
DATE: 2013 JUL 18

CARSON CITY
PUBLIC WORKS DEPARTMENT
3505 BUTTI WAY CARSON CITY, NEVADA 89701
PH: 887-2355 FAX: 887-2112

PROFESSIONAL ENGINEER – STATE OF NEVADA
JEFFERY A. SHARP
Exp. 6/30/14
CIVIL
No.017677
7/18/13

REV.	DATE	DESCRIPTION	BY	APP'D

MAYFLOWER & BEL AIRE WAY WATER MAIN REPLACEMENT
PROJECT No. 4.1201

TITLE SHEET

SHEET 1 OF 7

BID SET - NOT FOR CONSTRUCTION

H:\PROJECTS\4.1201 Waterline Replacement\Dwg\4-1201MAFLWR-TS1.dwg 7/18/13

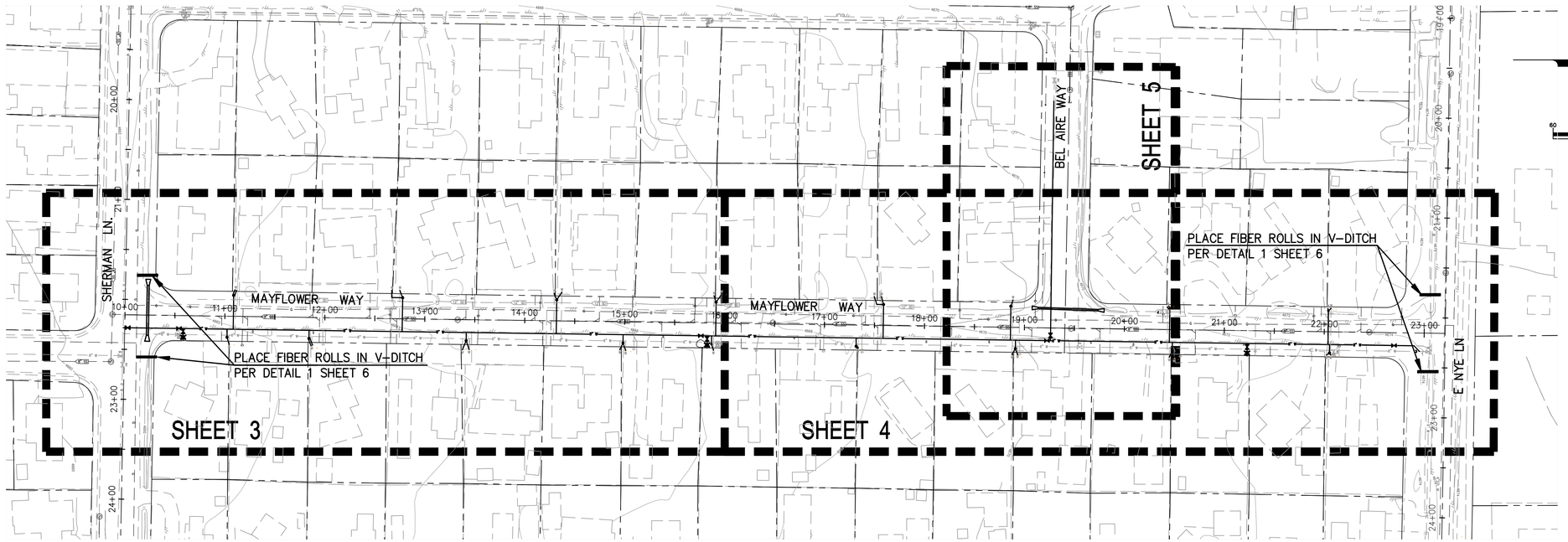

Call before you Dig
Avoid cutting underground utility lines. It's costly.
Call 811
OR
1-800-227-2600

SHEET INDEX

SCALE: 1" = 60'

LEGEND

EXISTING	PROPOSED	
		PROPERTY LINE
WV	WV	WATER VALVE
8"W		WATER LINE
W		WATER METER
		FIRE HYDRANT
XX"SS		SEWER LINE
S	S	SANITARY SEWER MANHOLE
S	S	SEWER SERVICE
XX"SD		STORM DRAIN CULVERT

EXISTING	PROPOSED	
		DRAINAGE SWALE
		GAS LINE
GV		GAS VALVE
		UTILITY POLE
TYPE	TYPE	SIGN
(3221)		ELEVATION CONTOUR
		AC PAVEMENT
		AC PAVEMENT PATCH
		PCC PAVEMENT
		FENCE LINE

STORMWATER PROTECTION NOTES:

1. PRIOR TO ANY CONSTRUCTION ACTIVITY, THE CONTRACTOR SHALL INSTALL AND MAINTAIN ALL STORM WATER PROTECTION DEVICES IN ACCORDANCE WITH THE "NEVADA CONTRACTORS FIELD GUIDE FOR CONSTRUCTION SITE BEST MANAGEMENT PRACTICES" AND DETAILS AS SHOWN.
2. ALL INSTALLED PROTECTION DEVICES SHALL BE INSPECTED AND APPROVED BY THE CARSON CITY CONSTRUCTION INSPECTOR PRIOR TO ANY CONSTRUCTION ACTIVITY.
3. BMP'S IN ADDITION TO THOSE INDICATED ON PLAN SHEETS, AND THE CONTRACTOR'S SWPPP MAY BE REQUIRED IF THEY DON'T MEET LOCAL PERFORMANCE STANDARDS.
4. ALL BMPs MUST BE INSPECTED WEEKLY, PRIOR TO FORECASTED RAIN EVENTS, AND WITHIN 24 HOURS AFTER ANY EVENT THAT CREATES RUNOFF AT THE SITE.
5. ACCUMULATED SEDIMENT MUST BE REMOVED FROM BMPs WHEN THE DESIGN CAPACITY HAS BEEN REDUCED BY 50 PERCENT OR MORE. SEDIMENT MUST ALSO BE REMOVED WITHIN SEVEN DAYS AFTER A RUNOFF EVENT OR PRIOR TO THE NEXT FORECASTED RAIN EVENT WHICHEVER IS EARLIER.
6. CONTRACTOR SHALL INSPECT LOCAL ROADS ADJACENT TO THE SITE DAILY, SWEEP OR VACUUM TO REMOVE ANY VISIBLE ACCUMULATED SEDIMENT.
7. ANY SEDIMENT THAT IS TRACKED ONTO PAVEMENT SHALL BE REMOVED BY SHOVELING, STREET SWEEPING OR VACUUMING. THE SEDIMENT COLLECTED BY SWEEPING SHALL BE REMOVED OR STABILIZED ON SITE. THE PAVEMENT SHALL NOT BE CLEANED BY WASHING DOWN THE STREET, EXCEPT WHEN SWEEPING IS INEFFECTIVE AND THERE IS A THREAT TO PUBLIC SAFETY. IF IT IS NECESSARY TO WASH THE STREETS, THE CONSTRUCTION OF A SMALL SUMP SHALL BE CONSIDERED. THE SEDIMENT WOULD THEN BE WASHED INTO THE SUMP WHERE IT CAN BE CONTROLLED
8. CONTRACTOR SHALL BE RESPONSIBLE FOR MAINTAINING DUST CONTROL WITHIN THE CONSTRUCTION LIMITS AT ALL TIMES.
9. STORM DRAIN INLET PROTECTION SHALL BE PLACED ACCORDINGLY ON THE NEAREST INLETS DOWNSTREAM OF ALL CONSTRUCTION ACTIVITIES.
10. HIGH VISIBILITY ORANGE SILT FENCE SHALL BE INSTALLED PER THE DETAILS SHOWN HEREON, AND MAINTAINED THROUGH OUT THE PROJECT.
11. THE CONTRACTOR OR HIS QUALIFIED AGENT IS REQUIRED TO ROUTINELY INSPECT ALL AREAS OF DISTURBED AND BARE SOIL, AREAS USED FOR STORAGE OF MATERIALS AND EQUIPMENT THAT ARE EXPOSED TO PRECIPITATION, ONSITE VEHICLE ENTRANCE AND EXIT LOCATIONS AND ALL ONSITE EROSION AND SEDIMENT CONTROL BMPS.

BASIS OF BEARING AND ELEVATION

THE BASIS OF BEARING, COORDINATES AND ELEVATION FOR THIS PROJECT IS: THE LINE BETWEEN "HV-1" (N 14740145.39, E 2299207.80 ELEV=4647.89) – CARSON CITY CONTROL POINT CC012 LOCATED ON THE EAST SIDE OF AIRPORT RD. AT 180' NORTH OF THE NORTH EDGE OF HWY 50 E. AND "HV-2" (N 14743452.63 E 2301796.72 ELEV=4672.28) – CARSON CITY CONTROL POINT CC031 LOCATED AT THE NORTHWEST CORNER OF THE INTERSECTION OF E. NYE LN. AND E. COLLEGE PKWY. WITH THE LINE BETWEEN THE TWO POINTS HAVING A BEARING OF N38°03'14"E AND DISTANCE OF 4200.05'.

COORDINATES ARE NEVADA STATE PLANE, WEST ZONE NAD83.

AERIAL MAPPING AND TOPOGRAPHY PREPARED BY NORTH AMERICAN MAPPING, FLOWN 10-5-04, WITH SUPPLEMENTAL FIELD SURVEY DATA PROVIDED BY CARSON CITY PUBLIC WORKS. ELEVATIONS ARE BASED ON NAVD88 DATUM

NOTE:
THE CONTRACTOR SHALL BE HELD RESPONSIBLE TO REPLACE IN KIND ALL EXISTING SURVEY CONTROL MARKERS WHICH ARE DAMAGED OR DISTURBED DUE TO HIS CONSTRUCTION EFFORTS. RE-ESTABLISHMENT OF SURVEY CONTROL MARKERS SHALL BE COMPLETED BY A NEVADA LICENSED PROFESSIONAL LAND SURVEYOR.

HORIZONTAL & VERTICAL CONTROL POINT DATA

POINT	NORTHING	EASTING	ELEVATION	DESCRIPTION / LOCATION
HV-1	14740145.39	2299207.80	4647.89	CARSON CITY CONTROL POINT CC012
HV-2	14743452.63	2301796.72	4672.28	CARSON CITY CONTROL POINT CC031

DESIGNED BY: BD
DRAWN BY: BD
CHECKED BY: JS
DWG NO.: 4-1201MAFLWR
SCALE (HORIZ): 1"=60'
SCALE (VERT): X"=XX'
PLOT DATE: 2013 JULY 18

CARSON CITY
PUBLIC WORKS DEPARTMENT
3505 BUTTI WAY CARSON CITY, NEVADA 89701
PH: 887-2355 FAX: 887-2112

PROFESSIONAL ENGINEER - STATE OF NEVADA
JEFFERY A. SCHAPP
Exp. 6/30/14
CIVIL
No.017617
7/18/13

REV.	DATE	DESCRIPTION	BY	APP'D

MAYFLOWER & BEL AIRE WAY
WATER MAIN REPLACEMENT
PROJECT No. 4.1201
INDEX SHEET
& STORMWATER PROTECTION PLAN

SHEET 2 OF 7

BID SET - NOT FOR CONSTRUCTION

H:\PROJECTS\4.1201 Waterline Replacement\dwg\4-1201MAFLWR.dwg, 7/18/13

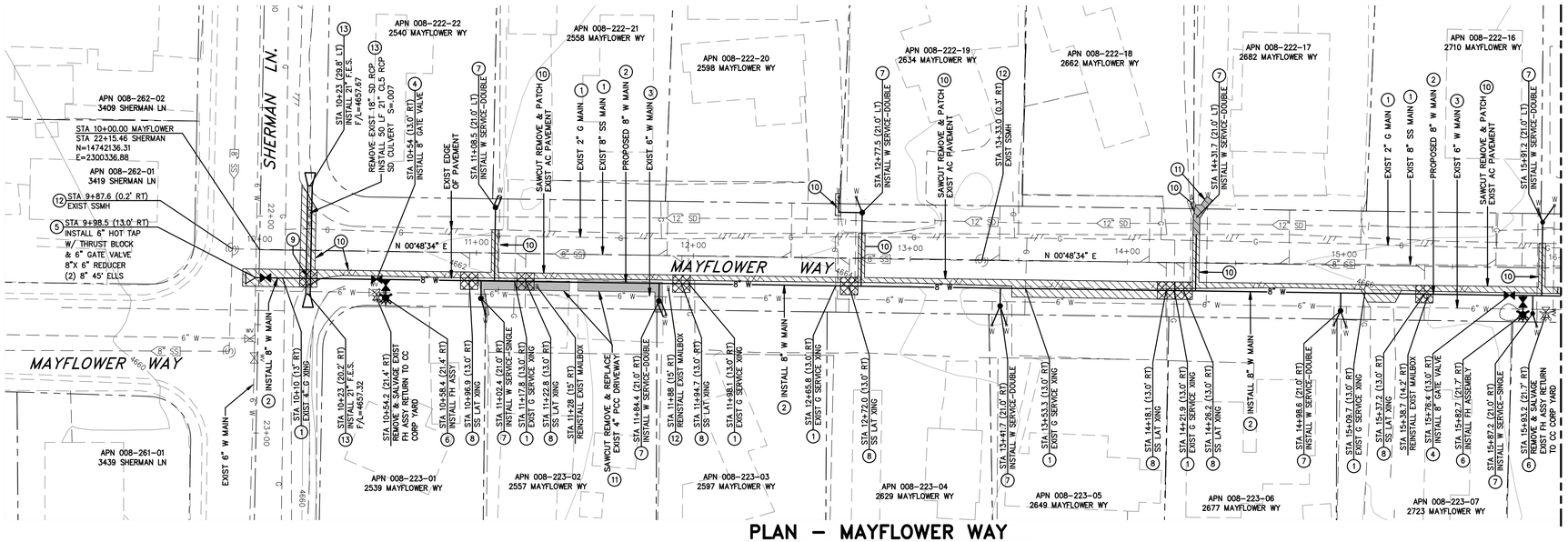

PLAN – MAYFLOWER WAY

SCALE: 1" = 30' HORIZ.

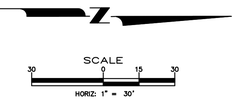

WATER NOTES

PER NAC 445A.67145 (6), WATER MAIN MUST NOT BE PLACED INTO SERVICE UNTIL:

1. THE WATER MAIN HAS BEEN DISINFECTED IN ACCORDANCE WITH AWWA STANDARD C651.
2. THE DISPOSAL OF ANY SPENT CHLORINE SOLUTIONS MUST BE COORDINATED WITH NDEP'S BUREAU OF WATER POLLUTION CONTROL (BWPC).
3. ANALYSES OF THE WATER MAIN WHICH INDICATE THAT THE WATER MEETS PRIMARY DRINKING WATER STANDARDS FOR COLIFORM BACTERIA (ABSENT FOR COLIFORM BACTERIA) HAVE BEEN OBTAINED AND REPORTED TO BSDW. PER AWWA STANDARD C651, TWO SETS OF CONSECUTIVE SAMPLES MUST BE TAKEN AT LEAST 24 HOURS APART FROM EVERY 1200 FEET OF MAIN, AT THE END OF THE LINE, AND FROM EACH BRANCH.

PER NAC 445A.67145 (8), DURING THE CONSTRUCTION OF A DISTRIBUTION SYSTEM, ANY OPENINGS IN UNFINISHED PIPING OR APPURTENANCES MUST BE SEALED AT THE END OF EACH WORKING DAY IN SUCH A MANNER AS TO PREVENT THE ENTRY OF BIRDS AND OTHER ANIMALS, DIRT, TRENCH WATER AND OTHER SOURCES OF POLLUTION OR CONTAMINATION.

CONSTRUCTION NOTES

1. POTHOLE EXISTING UTILITY CROSSINGS. PROTECT EXISTING UTILITY IN PLACE.
2. INSTALL 8" C900 DR18 WATER MAIN PER DETAIL C-1.2.1.
3. ABANDON EXISTING WATER MAIN UPON COMPLETION OF NEW WATER MAIN INSTALLATION. SLURRY FILL MAIN WITH TYPE 'A' EXCAVATABLE SLURRY.
4. INSTALL GATE VALVE PER DETAIL C-3.1.4 AND C-3.1.6.
5. INSTALL 6" HOT TAP PER DETAIL C-3.1.3. INSTALL 8"X 6" REDUCER.
6. INSTALL FIRE HYDRANT ASSEMBLY PER DETAIL C-3.1.7 AND C-3.1.7.1.
7. CONSTRUCT NEW 3/4" WATER SERVICE PER DETAILS C-3.2.1 AND C-3.2.3. ONCE THE NEW WATER MAIN HAS BEEN DISINFECTED, TESTED, AND APPROVED BY THE CITY, REMOVE EXISTING PIT SETTER AND TIE EXISTING SERVICE LINE(S) INTO NEW PIT SETTER. MAINTAIN MINIMUM 48 INCH HORIZONTAL CLEARANCE FROM SEWER LATERALS.
8. WATER MAIN/SANITARY SEWER LATERAL CROSSING. CENTER 20 LF STICK OF WATER MAIN PIPE AT CROSSING AND RESTRAIN WATER MAIN JOINTS ON BOTH SIDES OF CROSSING. POLYETHYLENE WRAP AND CONCRETE ENCASE SANITARY SEWER PIPE JOINTS WITHIN OPEN PIPE TRENCH PER DETAIL C-3.1.2A.
9. NEW STORM DRAIN CROSSING OVER NEW WATER MAIN. CENTER 20 LF STICK OF WATER PIPE AT CROSSING AND RESTRAIN WATER MAIN JOINTS ON BOTH SIDES OF CROSSING. POLYETHYLENE WRAP AND CONCRETE ENCASE ALL STORM DRAIN JOINTS WITHIN 10 FEET EACH SIDE OF THE CROSSING SIMILAR TO DETAIL C-3.1.2A.
10. SAWCUT, REMOVE AND PATCH EXISTING AC PAVEMENT AS NECESSARY PER DETAIL C-5.1.6
11. SAWCUT AND REMOVE EXIST PCC DRIVEWAY APRON AS NECESSARY. REPLACE WITH 4" PCC CONCRETE ON 6" AGG BASE COMPACTED TO 95%.
12. PROTECT IN PLACE
13. INSTALL CLASS 5 REINFORCED CONCRETE PIPE PER DETAIL C-1.2.1 MAINTAIN EXISTING FLOW THROUGHOUT CONSTRUCTION.
14. ABANDON EXISTING WATER VALVE PER "VALVE ABANDONMENT DETAIL" SHEET 7 UPON NEW MAIN BEING PLACED INTO SERVICE.

LEGEND:

- AREAS OF SPECIAL CONSTRUCTION SEE CONSTRUCTION NOTES 8 AND 9.
- SAWCUT & REMOVE EXISTING ASPHALT PAVEMENT CONST PERMANENT ASPHALT PAVEMENT PATCH PER DETAIL C-5.1.6.
- SAWCUT & REMOVE EXISTING PCC CONCRETE. REPLACE WITH 4" PCC ON 6" AGG BASE COMPACTED TO 95%.

Call before you Dig
Avoid costly damage by first calling
Call 811 OR 1-800-227-2600

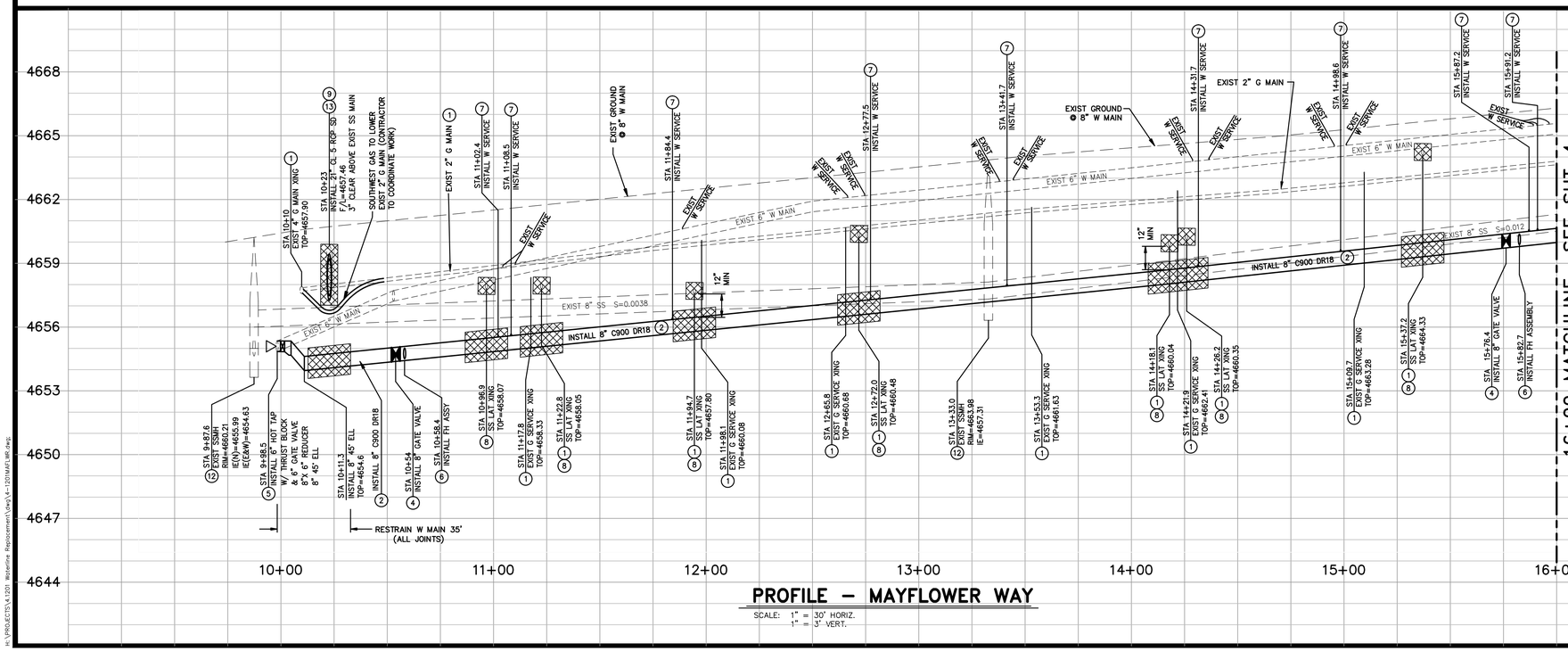

PROFILE – MAYFLOWER WAY

SCALE: 1" = 30' HORIZ.
1" = 3' VERT.

DESIGNED BY:	BD
DRAWN BY:	BD
CHECKED BY:	JS
DWG NO.:	4-1201MAFLWR
SCALE (HORIZ):	1"=30'
SCALE (VERT):	1"=3'
PLOT DATE:	2013 JULY 18

CARSON CITY
PUBLIC WORKS DEPARTMENT
3505 BUTTI WAY CARSON CITY, NEVADA 89701
PH: 887-2355 FAX: 887-2112

PROFESSIONAL ENGINEER STATE OF NEVADA
JEFFERY A. SHARP
Exp. 6/30/14
CIVIL
No. 017677
7/18/13

REV.	DATE	DESCRIPTION	BY	APP'D

MAYFLOWER & BEL AIRE WAY
WATER MAIN REPLACEMENT
PROJECT No. 4.1201

PLAN & PROFILE
MAYFLOWER WAY
STA 10+00 to STA 16+00

BID SET - NOT FOR CONSTRUCTION

SHEET 3 OF 7

H:\PROJECTS\4.1201 Waterline Replacement\Dwg\4-1201MAFLWR.dwg

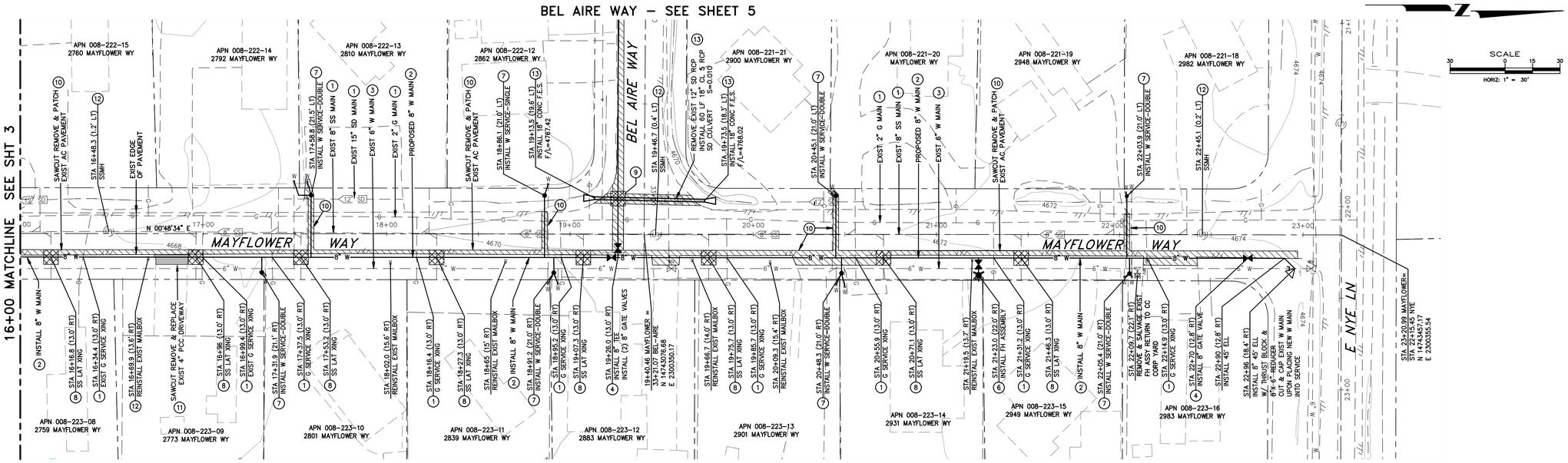

PLAN – MAYFLOWER WAY

SCALE: 1" = 30' HORIZ.

CONSTRUCTION NOTES

1. POTHOLE EXISTING UTILITY CROSSINGS. PROTECT EXISTING UTILITY IN PLACE.
2. INSTALL 8" C900 DR18 WATER MAIN PER DETAIL C-1.2.1.
3. ABANDON EXISTING WATER MAIN UPON COMPLETION OF NEW WATER MAIN INSTALLATION. SLURRY FILL MAIN WITH TYPE 'A' EXCAVATABLE SLURRY.
4. INSTALL GATE VALVE PER DETAIL C-3.1.4 AND C-3.1.6.
5. INSTALL 6" HOT TAP PER DETAIL C-3.1.3. INSTALL 8"X 6" REDUCER.
6. INSTALL FIRE HYDRANT ASSEMBLY PER DETAIL C-3.1.7 AND C-3.1.7.1.
7. CONSTRUCT NEW 3/4" WATER SERVICE PER DETAILS C-3.2.1 AND C-3.2.3. ONCE THE NEW WATER MAIN HAS BEEN DISINFECTED, TESTED, AND APPROVED BY THE CITY, REMOVE EXISTING PIT SETTER AND TIE EXISTING SERVICE LINE(S) INTO NEW PIT SETTER. MAINTAIN MINIMUM 48 INCH HORIZONTAL CLEARANCE FROM SEWER LATERALS.
8. WATER MAIN/SANITARY SEWER LATERAL CROSSING. CENTER 20 LF STICK OF WATER MAIN PIPE AT CROSSING AND RESTRAIN WATER MAIN JOINTS ON BOTH SIDES OF CROSSING. POLYETHYLENE WRAP AND CONCRETE ENCASE SANITARY SEWER PIPE JOINTS WITHIN OPEN PIPE TRENCH PER DETAIL C-3.1.2A.
9. NEW STORM DRAIN CROSSING OVER NEW WATER MAIN. CENTER 20 LF STICK OF WATER PIPE AT CROSSING AND RESTRAIN WATER MAIN JOINTS ON BOTH SIDES OF CROSSING. POLYETHYLENE WRAP AND CONCRETE ENCASE ALL STORM DRAIN JOINTS WITHIN 10 FEET EACH SIDE OF THE CROSSING SIMILAR TO DETAIL C-3.1.2A.
10. SAWCUT, REMOVE AND PATCH EXISTING AC PAVEMENT AS NECESSARY PER DETAIL C-5.1.6
11. SAWCUT AND REMOVE EXIST PCC DRIVEWAY APRON AS NECESSARY. REPLACE WITH 4" PCC CONCRETE ON 6" AGG BASE COMPACTED TO 95%.
12. PROTECT IN PLACE
13. INSTALL CLASS 5 REINFORCED CONCRETE PIPE PER DETAIL C-1.2.1 MAINTAIN EXISTING FLOW THROUGHOUT CONSTRUCTION.
14. ABANDON EXISTING WATER VALVE PER "VALVE ABANDONMENT DETAIL" SHEET 7 UPON NEW MAIN BEING PLACED INTO SERVICE.

LEGEND:

- AREAS OF SPECIAL CONSTRUCTION SEE CONSTRUCTION NOTES 8 AND 9.
- SAWCUT & REMOVE EXISTING ASPHALT PAVEMENT CONST PERMANENT ASPHALT PAVEMENT PATCH PER DETAIL C-5.1.6.
- SAWCUT & REMOVE EXISTING PCC CONCRETE. REPLACE WITH 4" PCC ON 6" AGG BASE COMPACTED TO 95%.

Call before you Dig
Avoid costly damage and delays by first calling
Call 811 OR 1-800-227-2600

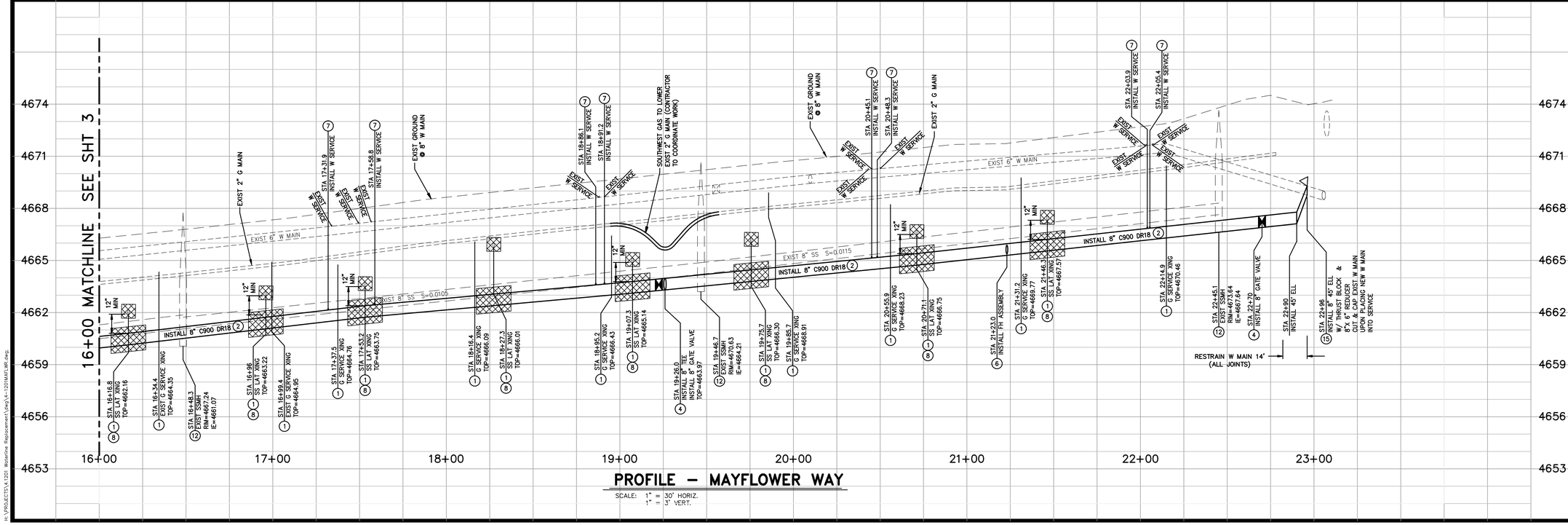

PROFILE – MAYFLOWER WAY

SCALE: 1" = 30' HORIZ.
1" = 3' VERT.

DESIGNED BY: BD
DRAWN BY: BD
CHECKED BY: JS
DWG NO.: 4-1201MAFLWR
SCALE (HORIZ): 1"=30'
SCALE (VERT): 1"=3'
PLOT DATE: 2013 JULY 18

CARSON CITY
PUBLIC WORKS DEPARTMENT
3505 BUTTI WAY CARSON CITY, NEVADA 89701
PH: 887-2355 FAX: 887-2112

PROFESSIONAL ENGINEER – STATE OF NEVADA
JEFFERY A. SAURO
Exp. 6/30/14
CIVIL
No. 017677
7/18/13

REV.	DATE	DESCRIPTION	BY	APP'D

MAYFLOWER & BEL AIRE WAY
WATER MAIN REPLACEMENT
PROJECT No. 4.1201
PLAN & PROFILE
MAYFLOWER WAY
STA 16+00 to STA 23+50

SHEET 4 OF 7

BID SET - NOT FOR CONSTRUCTION

H:\PROJECTS\4-1201 Waterline Replacement\dwg\4-1201MAFLWR.dwg

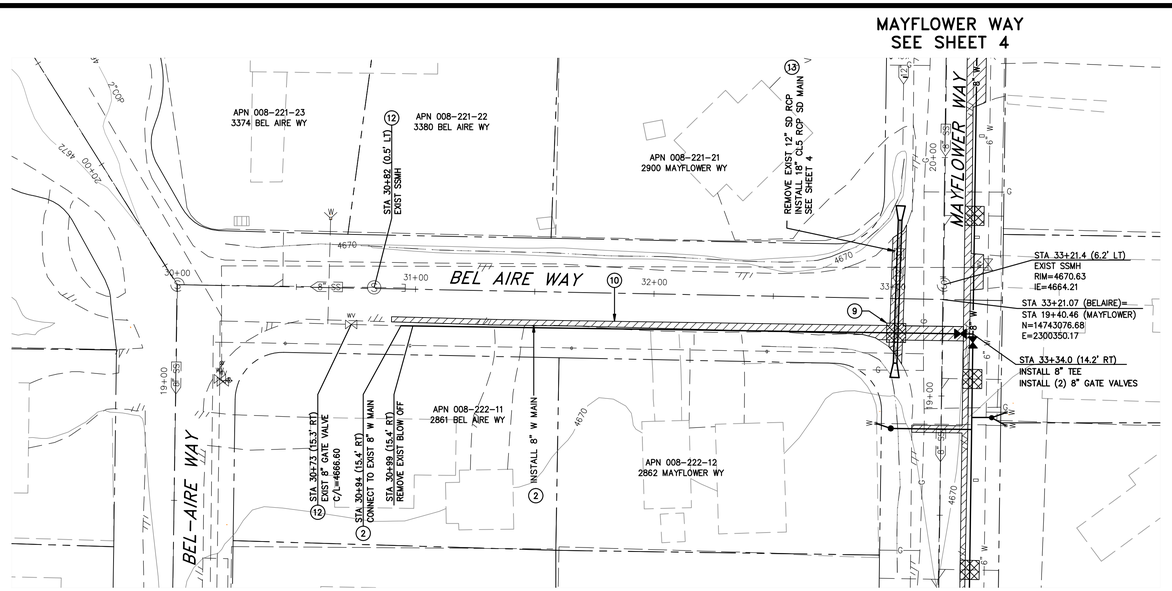

PLAN – BEL AIRE WAY

SCALE: 1" = 30' HORIZ.

MAYFLOWER WAY
SEE SHEET 4

LEGEND:

- AREAS OF SPECIAL CONSTRUCTION SEE CONSTRUCTION NOTES 8 AND 9.
- SAWCUT & REMOVE EXISTING ASPHALT PAVEMENT CONST PERMANENT ASPHALT PAVEMENT PATCH PER DETAIL C-5.1.6.
- SAWCUT & REMOVE EXISTING PCC CONCRETE. REPLACE WITH 4" PCC ON 6" AGG BASE COMPACTED TO 95%.

CONSTRUCTION NOTES

1. POTHOLE EXISTING UTILITY CROSSINGS. PROTECT EXISTING UTILITY IN PLACE.
2. INSTALL 8" C900 DR18 WATER MAIN PER DETAIL C-1.2.1.
3. ABANDON EXISTING WATER MAIN UPON COMPLETION OF NEW WATER MAIN INSTALLATION. SLURRY FILL MAIN WITH TYPE 'A' EXCAVATABLE SLURRY.
4. INSTALL GATE VALVE PER DETAIL C-3.1.4 AND C-3.1.6.
5. INSTALL 6" HOT TAP PER DETAIL C-3.1.3. INSTALL 8"X 6" REDUCER.
6. INSTALL FIRE HYDRANT ASSEMBLY PER DETAIL C-3.1.7 AND C-3.1.7.1.
7. CONSTRUCT NEW 3/4" WATER SERVICE PER DETAILS C-3.2.1 AND C-3.2.3. ONCE THE NEW WATER MAIN HAS BEEN DISINFECTED, TESTED, AND APPROVED BY THE CITY, REMOVE EXISTING PIT SETTER AND TIE EXISTING SERVICE LINE(S) INTO NEW PIT SETTER. MAINTAIN MINIMUM 48 INCH HORIZONTAL CLEARANCE FROM SEWER LATERALS.
8. WATER MAIN/SANITARY SEWER LATERAL CROSSING. CENTER 20 LF STICK OF WATER MAIN PIPE AT CROSSING AND RESTRAIN WATER MAIN JOINTS ON BOTH SIDES OF CROSSING. POLYETHYLENE WRAP AND CONCRETE ENCASE SANITARY SEWER PIPE JOINTS WITHIN OPEN PIPE TRENCH PER DETAIL C-3.1.2A.
9. NEW STORM DRAIN CROSSING OVER NEW WATER MAIN. CENTER 20 LF STICK OF WATER PIPE AT CROSSING AND RESTRAIN WATER MAIN JOINTS ON BOTH SIDES OF CROSSING. POLYETHYLENE WRAP AND CONCRETE ENCASE ALL STORM DRAIN JOINTS WITHIN 10 FEET EACH SIDE OF THE CROSSING SIMILAR TO DETAIL C-3.1.2A.
10. SAWCUT, REMOVE AND PATCH EXISTING AC PAVEMENT AS NECESSARY PER DETAIL C-5.1.6
11. SAWCUT AND REMOVE EXIST PCC DRIVEWAY APRON AS NECESSARY. REPLACE WITH 4" PCC CONCRETE ON 6" AGG BASE COMPACTED TO 95%.
12. PROTECT IN PLACE
13. INSTALL CLASS 5 REINFORCED CONCRETE PIPE PER DETAIL C-1.2.1 MAINTAIN EXISTING FLOW THROUGHOUT CONSTRUCTION.
14. ABANDON EXISTING WATER VALVE PER "VALVE ABANDONMENT DETAIL" SHEET 7 UPON NEW MAIN BEING PLACED INTO SERVICE.

Call before you Dig
Avoid costly delays and injury by first calling
Call 811 OR 1-800-227-2600

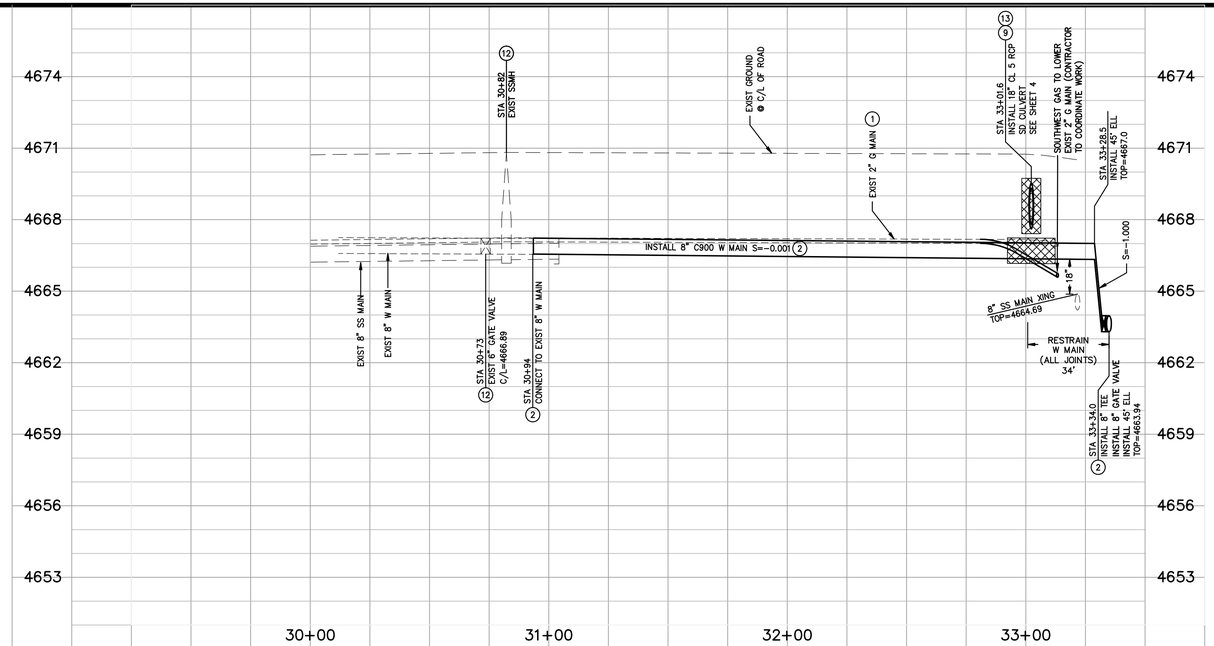

PROFILE – BEL AIRE WAY

SCALE: 1" = 30' HORIZ.
1" = 3' VERT.

DESIGNED BY: BD
DRAWN BY: BD
CHECKED BY: JS
DWG NO.: 4-1201MAFLWR
SCALE (HORIZ): 1"=30'
SCALE (VERT): 1"=3'
PLOT DATE: 2013 JUL 18

CARSON CITY
PUBLIC WORKS DEPARTMENT
3505 BUTTI WAY CARSON CITY, NEVADA 89701
PH: 887-2355 FAX: 887-2112

PROFESSIONAL ENGINEER - STATE OF NEVADA
JEFFERY A. SHARP
EXP. 6/30/
CIVIL
No.017677
7/18/13

REV.	DATE	DESCRIPTION	BY	APP'D

MAYFLOWER & BEL AIRE WAY
WATER MAIN REPLACEMENT
PROJECT No. 4.1201
PLAN & PROFILE
BEL AIRE WAY
STA 30+00 to STA 33+50

SHEET 5 OF 7

BID SET - NOT FOR CONSTRUCTION

H:\PROJECTS\4.1201 Waterline Replacement\dwg\4-1201MAFLWR.dwg

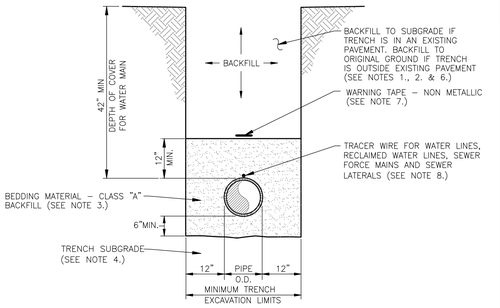

TYPICAL TRENCH SECTION

NTS

NOTES:

1. WATER DENSIFIED BACKFILL AND TUNNELING SHALL BE BY SPECIAL PROVISION ONLY.
2. BACKFILL SHALL CONFORM TO THE REQUIREMENTS OF CLASS E BACKFILL AS SPECIFIED IN SUBSECTION 200.03.06 OF THE SSPWC. MATERIAL SHALL BE PLACED IN LIFT THICKNESS SPECIFIED IN SUBSECTION 305.10 OF THE SSPWC AND DENSIFIED TO 90% RELATIVE COMPACTION.
3. BEDDING SHALL CONFORM TO THE REQUIREMENTS OF CLASS A BACKFILL AS SPECIFIED IN SUBSECTION 200.03.02 OF THE SSPWC. MATERIAL SHALL BE DENSIFIED TO 90% RELATIVE COMPACTION.
4. PLANS SHALL INCLUDE A DETAIL FOR SUBGRADE STABILIZATION INCLUDING BACKFILL MATERIAL, STRUCTURAL GEOTEXTILE FILTER FABRIC AND MODIFIED CUTOFF COLLARS WHEN POTENTIAL FOR UNSTABLE SUBGRADES EXIST, SUBJECT TO THE APPROVAL OF THE CARSON CITY ENGINEER OR PUBLIC WORKS DIRECTOR.
5. FOR TRENCHES IN ROADWAY SECTION, SEE PAVEMENT PATCH DETAIL (DWG. No. C–5.1.6).
6. FOR THE PURPOSE OF PAYMENT; EXCAVATION AND BACKFILL QUANTITIES ARE BASED ON THESE STANDARD DRAWINGS, AND NO ADDITIONAL COMPENSATION WILL BE MADE. SHORING OR SLOPED CUT SLOPES MAY BE NECESSARY, BUT THERE WILL BE NO ADDITIONAL PAYMENT. ALL EXCAVATIONS SHALL CONFORM TO THE LATEST O.S.H.A. REQUIREMENTS.
7. PLACE NON METALLIC WARNING TAPE 1 FOOT ABOVE ALL BURIED PIPES AND CONDUITS.
8. TRACER WIRE SHALL BE 12 GAUGE (MINIMUM THICKNESS) INSULATED SOLID COPPER OR COPPER–CLAD STEEL CORE WIRE. INSULATION SHALL BE 30 MIL HDPE. PLANS SHALL SPECIFY WIRE STRENGTH AND INSULATION THICKNESS FOR BORING APPLICATIONS. SPLICES SHALL BE CONNECTED BY WIRE NUTS, SEALED WITH AQUA SEAL OR SILICON FILLED, AND DOUBLE WRAPPED WITH U/L LISTED ELECTRICAL TAPE. TRACER WIRE COLOR SHALL BE, BLUE FOR WATER, PURPLE FOR RECLAIMED WATER, AND GREEN FOR SEWER.

NO.	REVISION	DATE	STANDARD DETAIL FOR PUBLIC WORKS CONSTRUCTION	SECTION CARSON CITY
			TRENCH EXCAVATION AND BACKFILL (MODIFIED)	DRAWING NO. C–1.2.1 (305)
APPROVED BY:		7/09		DATE 7/2009

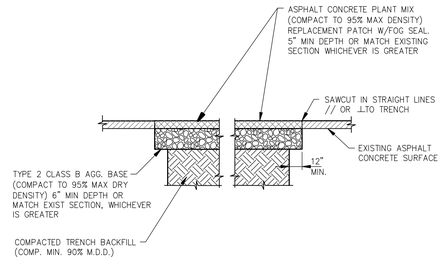

NOTES:

1. IF SAWCUT IS WITHIN 24 INCHES OF EDGE OF A.C. PAVEMENT REMOVE EXISTING PAVEMENT TO THAT EDGE AND REPLACE ENTIRE SECTION.
2. BITUMINOUS MATERIAL SHALL MEET THE REQUIREMENTS OF SECTIONS 201 AND 320 OF THE STANDARD SPECIFICATIONS FOR PUBLIC WORKS CONSTRUCTION.
3. MIXING, SPREADING, AND COMPACTING OF BITUMINOUS PAVEMENT SHALL BE DONE ONLY WHEN THE SURFACE ON WHICH THE MATERIALS ARE TO BE PLACED IS DRY AND WHEN THE ATMOSPHERIC TEMPERATURE IS ABOVE 50 DEGREES FAHRENHEIT AND HAS NOT BEEN BELOW 40 DEGREES FAHRENHEIT DURING THE PRECEDING 24 HOURS.
4. FINISHED SURFACE VARIATIONS SHALL BE 0 TO 0.25 INCHES ABOVE EXISTING SURFACE. ALL HUMPS EXCEEDING THIS TOLERANCE SHALL BE CORRECTED BY REMOVAL OF MATERIAL AND REPLACING IT WITH NEW MATERIAL. FINISHED SURFACE OF PATCH SHALL NOT BE BELOW EXISTING ADJACENT SURFACE.
5. PLANTMIX BITUMINOUS PAVEMENT SURFACE COURSE SHALL BE PG–64–22 TYPE 3 AND SUB SURFACE COURSES SHALL BE PG–64–22 TYPE 3 UNLESS OTHERWISE NOTED.
6. PLANTMIX BITMUMINOUS PAVEMENT PATCHES SHALL MATCH EXISTING SECTION OR HAVE A MINIMUM THICKNESS OF 5 INCHES, WHICHEVER IS GREATER.
7. PLANS SHALL SPECIFY PAVEMENT PATCH AND AGGREGATE BASE DEPTHS AS SPECIFIED BY THE DESIGN ENGINEER.

NO.	REVISION	DATE	STANDARD DETAIL FOR PUBLIC WORKS CONSTRUCTION	SECTION CARSON CITY
1	5" AC DEPTH	09/11	**PAVEMENT PATCH**	DRAWING NO. C–5.1.6
APPROVED BY:		09/11		DATE 7/2009

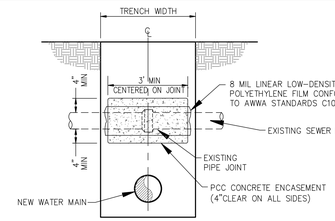

SEWER LATERAL CROSSING WATER MAIN

NTS

SPECIAL CONSTRUCTION:
NEW WATER MAIN CONSTRUCTION UNDER EXISTING SEWER LATERAL, OR LESS THAN 18 INCHES ABOVE SEWER LATERAL

CENTER WATER PIPE 10 FEET EACH SIDE OF EXISTING SEWER LATERAL CROSSING AND , MECHANICALLY RESTRAIN THE WATER MAIN JOINTS ON BOTH SIDES OF CROSSING.

NOTES:

1. IF WATER MAIN IS 18 INCHES OR GREATER ABOVE THE SEWER LATERAL, NO SPECIAL CONSTRUCTION IS REQUIRED.
2. ENCASEMENT SLURRY BACKFILL SHALL BE TYPE B (NON–EXCAVATABLE) PER TABLE 337.08.01–I OF THE STANDARD SPECIFICATIONS FOR PUBLIC WORKS CONSTRUCTION.

NO.	REVISION	DATE	STANDARD DETAIL FOR PUBLIC WORKS CONSTRUCTION	SECTION CARSON CITY
			WATER MAIN CROSSING EXISTING SANITARY SEWER LATERAL (MODIFIED)	DRAWING NO. C–3.1.2.A
APPROVED BY:		4/13		DATE 3/2013

1. WATER MAIN SHUTDOWNS/INTERRUPTION OF WATER/FIRE SERVICE; OBTAIN TENTATIVE APPROVAL FROM CARSON CITY WATER UTILITY PRIOR TO PLANNING A SHUTDOWN. APPROVAL IS REQUIRED ONE WORKING DAY PRIOR TO NOTIFICATION OF CUSTOMERS. COMMERCIAL CUSTOMERS SHALL RECEIVE 2 WORKING DAYS WRITTEN AND VERBAL NOTICE OF A SHUTDOWN. SPECIAL ARRANGEMENTS INCLUDING NIGHT TIME SHUTDOWNS MAY BE REQUIRED OF THE CONTRACTOR TO ACCOMMODATE CUSTOMER OPERATIONS. RESIDENTIAL CUSTOMERS SHALL RECEIVE 24 HOURS WRITTEN NOTICE. WHEN WORK IS PERFORMED BY CITY STAFF, THE CITY IS RESPONSIBLE FOR THE NOTIFICATION. THE CONTRACTOR IS RESPONSIBLE IN ALL OTHER CASES. A LIST SHALL BE KEPT BY THE RESPONSIBLE PARTY LISTING THE DATE, TIME AND ADDRESS OF ALL PERSONS NOTIFIED. THE PERSON NOTIFIED SHALL BE INCLUDED ON THE LIST FOR ALL COMMERCIAL CUSTOMERS. CONTACT CARSON CITY WATER UTILITY FOR PHONE NUMBERS WHEN COMMERCIAL CUSTOMERS CANNOT BE LOCATED. THE CONTRACTOR WILL BE SUBJECT TO DAMAGE CLAIMS SHOULD THEY FAIL TO NOTIFY CUSTOMERS OR MAINTAIN DOCUMENTATION OF NOTIFICATION OF CUSTOMERS. THE TOTAL TIME OF ANY WATER SERVICE INTERRUPTION IS LIMITED TO 4 HOURS MAXIMUM. THE CONTRACTOR SHALL NOT OPERATE ANY EXISTING WATER VALVES. WATER MAIN SHUTDOWNS WILL ONLY BE SCHEDULED FOR TUESDAYS, WEDNESDAYS, OR THURSDAYS, EXCLUDING THE WORKING DAYS BEFORE AND AFTER A HOLIDAY. CONTRACTOR SHALL MAKE A WRITTEN REQUEST, TO THE WATER OPERATIONS CHIEF, A MINIMUM OF 10 CALENDAR DAYS IN ADVANCE OF ANY PLANNED SHUTDOWN.
2. WATER MAINS (6 INCH THRU 12 INCH) SHALL BE PVC C900, DR 18 (MINIMUM WALL THICKNESS) UNLESS HIGHER PRESSURE IS SPECIFIED ON THE PLANS. WATER SERVICES 2 INCHES OR LESS SHALL BE CTS, PE TUBING MINIMUM 200 PSI; WATER SERVICES 3 INCHES OR GREATER SHALL BE 4 INCH MINIMUM DIAMETER PVC C900, DR 18 OR AS SPECIFIED ON THE PLANS.
3. MAINTAIN 18 INCHES VERTICAL AND 5 FEET HORIZONTAL SEPARATION BETWEEN WATER LINES AND ALL UNDERGROUND POWER LINES. IF WATER LINE IS BELOW POWER LINE OR IS WITHIN 18 INCH VERTICAL SEPARATION OF POWER LINE, POWER LINE SHALL BE ENCASED WITH 4 INCHES MINIMUM OF CONCRETE EXTENDING 5 FEET EACH SIDE OF CROSSING. (SEE NV ENERGY SPECS.) CONCRETE ENCASEMENT OF WATER LINES IS NOT ALLOWED.
4. ALL HOT TAPS, GREATER THAN 2 INCHES AND LESS THAN 14 INCHES, ARE TO BE PERFORMED BY CARSON CITY WATER UTILITY. THE CONTRACTOR SHALL CONTACT THE WATER OPERATIONS CHIEF AT LEAST 2 WORKING DAYS PRIOR TO SCHEDULING HOT TAP DATE AND TIME (HOT TAPS ARE PERFORMED TUESDAY THRU THURSDAY EXCLUDING THE WORKING DAYS BEFORE AND AFTER A HOLIDAY). PRIOR TO HOT TAPPING, THE SADDLE SHALL BE HYDROSTATICALLY PRESSURE TESTED TO 150 PSI MINIMUM OR THE DESIGN OF PIPE SYSTEM FOR A MINIMUM OF 5 MINUTES. THE TEST SHALL BE PERFORMED IN THE PRESENCE OF THE WATER UTILITY PERSONNEL PRIOR TO PERFORMING THE TAP.
5. WATER VALVE MARKERS SHALL BE BLUE CARSONITE UTILITY MARKER (CUM–375), 5 FEET–2 INCHES (5'–2") WITH CARSON CITY WATER VALVE DECAL (CWV–116) OR APPROVED EQUAL. PLACE MARKER NO MORE THAN 5 FEET FROM THE VALVE OR AS DIRECTED BY THE CARSON CITY INSPECTOR.
6. REDUCED PRESSURE PRINCIPLE AND DOUBLE CHECK VALVE BACKFLOW ASSEMBLIES SHALL BE APPROVED BY THE CARSON CITY INSPECTOR, AND TESTED BY A CERTIFIED BACKFLOW ASSEMBLY TESTER, AND TEST RESULTS SHALL BE APPROVED BY CARSON CITY WATER UTILITY. FOR NEW WATER METER SETS, THE REQUIRED BACKFLOW PREVENTION ASSEMBLY SHALL BE INSTALLED, INSPECTED, APPROVED AND CERTIFIED TEST RESULTS PROVIDED TO THE CARSON CITY INSPECTOR WITHIN 5 DAYS OF METER SET, UNLESS THE CARSON CITY ENGINEER OR PUBLIC WORKS DIRECTOR APPROVES OTHERWISE. THE SERVICE WILL BE LOCKED OFF IF INSPECTIONS AND CERTIFICATIONS ARE NOT COMPLETED AS SPECIFIED ABOVE. A 25 DOLLAR FEE WILL BE ASSESSED AT TIME OF TURN–ON WHEN LOCK IS REMOVED DURING NORMAL WORKING HOURS. THE FEE WILL BE ASSESSED ON THE BUILDING PERMIT FOR THE INSTALLATION OF THE BACKFLOW DEVICE.
7. ALL WATER MAIN, WATER/FIRE SERVICE, AND BACKFLOW PREVENTION INSPECTIONS AND TESTING MUST BE APPROVED PRIOR TO APPROVAL OF ANY CERTIFICATE OF OCCUPANCY.
8. DISINFECTION TABLETS SHALL BE PLACED USING TITEBOND MULTI–PURPOSE CLEAR 100%% SILICONE OR APPROVED EQUAL FOOD GRADE SILICONE

NO.	REVISION	DATE	STANDARD DETAIL FOR PUBLIC WORKS CONSTRUCTION	SECTION CARSON CITY
			WATER GENERAL NOTES (MODIFIED)	DRAWING NO. C–3.1.1 (307)
APPROVED BY:		07/09		DATE 7/2009

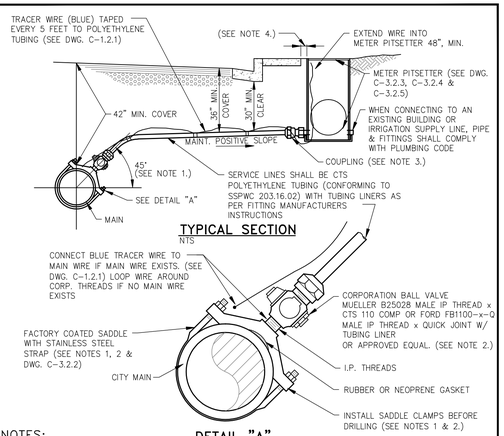

TYPICAL SECTION

NTS

DETAIL "A"

NTS

NOTES:

1. MINIMUM DISTANCE BETWEEN TAPS AND MAINLINE FITTINGS, INCLUDING BELLS SHALL BE 18 INCHES. TAPPING SADDLE MUST BE AT 45 DEGREE ANGLE, EXCEPTIONS MUST BE APPROVED BY CARSON CITY WATER UTILITY.
2. CORPORATION VALVES AND SERVICE SADDLES SHALL CONFORM TO AWWA C800 AND BE NO LESS THAN THE SERVICE LINE SIZE. WHEN REPLACING AN EXISTING SERVICE LINE AND A SIZE LARGER THAN SHOWN IS ENCOUNTERED, THE LARGER SIZE LINE, FITTINGS AND SADDLE SHALL BE INSTALLED UNLESS APPROVED BY CARSON CITY WATER UTILITY.
3. COUPLING FITTING SHALL CONFORM TO AWWA C800 AND BE A MUELLER H–15451 CTS 110 COMP OR FORD C14–xx–Q QUICK JOINT W/ TUBING LINER x FEMALE IP THREAD OR APPROVED EQUAL.
4. METER PITSETTERS TO BE PLACED 4 INCHES FROM BACK OF SIDEWALK IN AREAS WHERE SIDEWALK IS ADJACENT TO CURB, OR 6 INCHES FROM BACK OF CURB IN AREAS WHERE SIDEWALK IS OFFSET FROM CURB, OR AS DIRECTED BY CARSON CITY WATER UTILITY. IN AREAS WHERE NO CURB OR SIDEWALK IS PRESENT, METER PITSETTERS SHALL BE PLACED WITHIN THE RIGHT–OF–WAY AS SHOWN ON THE APPROVED PLANS.
5. DISCONTINUANCE OF USE OF A SERVICE REQUIRES ABANDONMENT OF THE SERVICE. NOTIFY CARSON CITY PUBLIC WORKS FOR METER REMOVAL PRIOR TO PROCEEDING WITH ABANDONMENT. REMOVE EXISTING METER BOX AND EXPOSE CORP STOP AT MAIN FOR SHUT–OFF. ALL PIPING OR TUBING SHALL BE DISCONNECTED FROM CORP AND PLUGGED AT BOTH ENDS. CARSON CITY PUBLIC WORKS SHALL BE NOTIFIED FOR INSPECTION OF CORP ASSEMBLY PRIOR TO BACKFILLING.

NO.	REVISION	DATE	STANDARD DETAIL FOR PUBLIC WORKS CONSTRUCTION	SECTION CARSON CITY
			3/4" TO 2" WATER SERVICE	DRAWING NO. C–3.2.1 (203,307)
APPROVED BY:		07/09		DATE 7/2009

MATERIALS LIST:

1. PVC BOX MIN. WALL THICKNESS 0.300", MUELLER THERMAL–COIL METER BOX OR APPROVED EQUAL. FACTORY EQUIPED AS LISTED, CONFORMING TO AWWA C800.
2. INSULATION PAD (4" THICK)
3. AIR SPACE
4. PLATFORM
5. PLATFORM SUPPORT
6. POLYBUTYLENE TUBING CLASS 250
7. I.P. THREADS
8. ALUMINUM BOTTOM
9. WATER METER(S) & TRANSPONDER(S) SUPPLIED BY CARSON CITY WATER UTILITY
10. CAST IRON LOCKING LID W/ 2" TRANSPONDER OPENING(S)
    MUELLER METER BOX SETTER LIDS
    FOR 3/4" SINGLE, PART No. TRPL–780112
    FOR 3/4" DOUBLE, PART No. TRPL–780111
    FOR 1" SINGLE, PART No. TRPL–780113
11. MUELLER LOCKABLE VALVE (NO. 14265)
12. MUELLER ANGLE CHECK VALVE
13A. INLET LINE TO BE 3/4" MIN. (SEE NOTE 1. AND DWG. C–3.2.1)
13B. INLET LINE TO BE 1" MIN. (SEE NOTE 1. AND DWG. C–3.2.1)
14. FACTORY SUPPLIED CAP TO REMAIN IN PLACE UNTIL SUPPLY LINE IS EXTENDED BY CUSTOMER
15. BLUE TRACER WIRE EXTEND INTO METER PITSETTER 48" MIN.

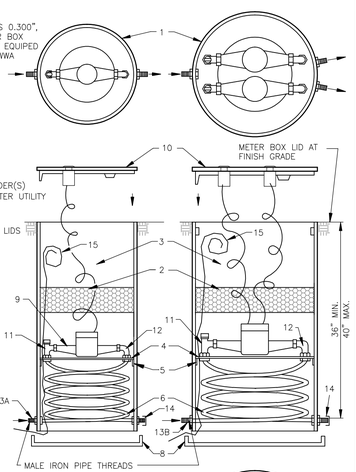

NOTES:

1. SERVICE LINE–MIN. SIZE AS SHOWN HEREON (3/4–1")
2. PIT SETTER EXTENSION, 6" TOTAL MAX. SHALL ONLY BE USED UPON APPROVAL BY CARSON CITY WATER UTILITY

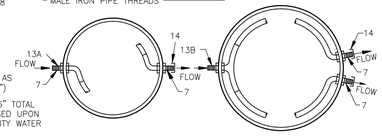

NO.	REVISION	DATE	STANDARD DETAIL FOR PUBLIC WORKS CONSTRUCTION	SECTION CARSON CITY
			3/4" DOUBLE AND SINGLE PIT SETTER, 1" SINGLE PIT SETTER	DRAWING NO. C–3.2.3 (203, 307)
APPROVED BY:		7/09		DATE 7/2009

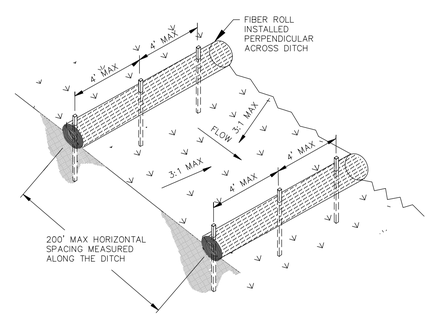

FIBER ROLL CHECK DAM ACROSS DRAINAGE DITCH

NO SCALE

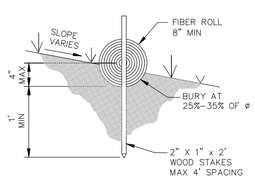

ENTRENCHING DETAIL

NO SCALE

TYPICAL FIBER ROLL INSTALLATION (1/6)

NO SCALE

DESIGNED BY: BD
DRAWN BY: BD
CHECKED BY: JS
DWG NO.: 4–1201MAFLWR
SCALE (HORIZ): N/A
SCALE (VERT): X"=XX'
PLOT DATE: 2013 JULY 18

CARSON CITY PUBLIC WORKS DEPARTMENT
3505 BUTTI WAY CARSON CITY, NEVADA 89701
PH: 887–2355 FAX: 887–2112

PROFESSIONAL ENGINEER – STATE OF NEVADA – JEFFERY A. SHARP – Exp. 6/30/ – CIVIL – No.017677 – 7/18/13

REV.	DATE	DESCRIPTION	BY	APP'D

MAYFLOWER & BEL AIRE WAY WATER MAIN REPLACEMENT
PROJECT No. 4.1201

DETAILS

SHEET 6 OF 7

BID SET - NOT FOR CONSTRUCTION

MATERIAL SPECIFICATIONS

SHELL: 304 STAINLESS STEEL

LUGS: 304 STAINLESS STEEL

BOLTS, WASHERS AND NUTS: NC ROLLED THREAD 304 STAINLESS STEEL, 5/8" DIAMETER.

GASKETS: VIRGIN SBR COMPOUNDED FOR WATER SERVICE. ASTM D2000-80MA 4AA607 FULL GASKET. 360° PIPE COVERAGE 150 PSI MIN. WORKING PRESSURE.

FLANGE: 304 STAINLESS STEEL OR HIGH TENSILE DUCTILE (NODULAR) IRON, ASTM A536-80, GRADE 65-45-12.

NOM. FLANGE	A	B	C	NO. BOLTS
4	4"	5-1/32"	16"	10
6*	4-1/2"	7-1/32"	16"	10
8*	4"	9-1/32"	20"	14
10	5-1/2"	11-1/32"	24"	16
12**	6-1/2"	13-1/32"	30"	30

*TAPPING SLEEVES IN THE 24" NOMINAL PIPE SIZE RANGE WITH 6" OR 8" FLANGES ARE 24" LONG (C-DIMENSION) AND HAVE 24" BOLTS.

**TAPPING SLEEVES IN THE 12" & 14" NOMINAL PIPE SIZE RANGE W/ 12" FLANGE ARE 24" LONG AND HAVE 24 BOLTS.

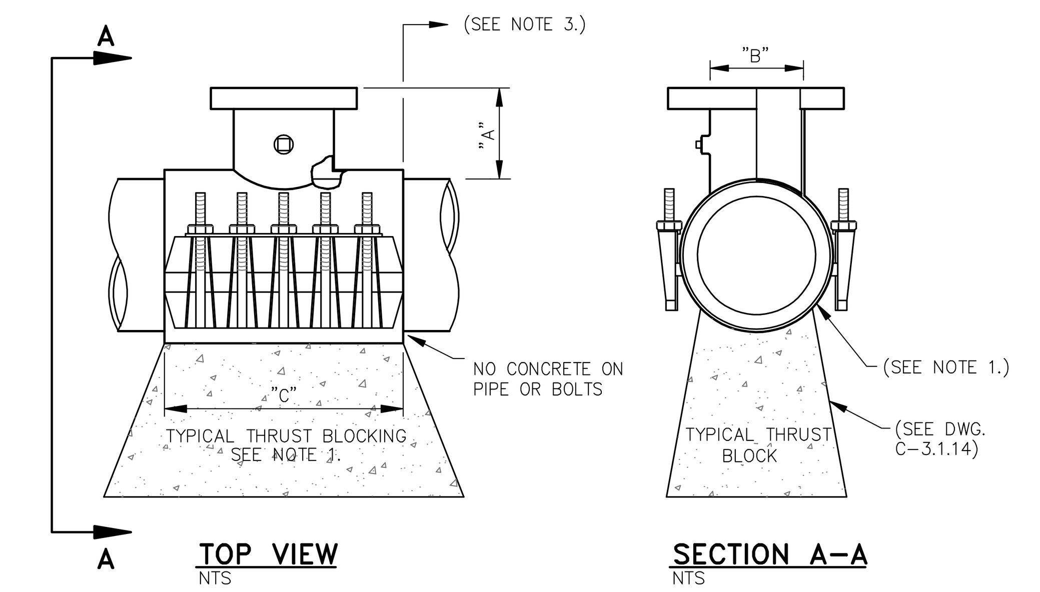

TOP VIEW
NTS

SECTION A-A
NTS

NOTES:

1. MATERIAL USED FOR THRUST BLOCKING SHALL NOT PREVENT ACCESS TO THE BOLT ASSEMBLY.
2. POTABLE WATER HOT TAPS GREATER THAN 2 INCHES AND LESS THAN 14 INCHES SHALL BE PERFORMED BY CARSON CITY WATER UTILITY.
3. MINIMUM DISTANCE BETWEEN TAP SADDLE, COLLARS, JOINTS, SERVICE TAPS, ETC. SHALL BE 18 INCHES CLEAR.
4. SADDLE TO BE HYDROSTATICALLY PRESSURE TESTED BY THE CONTRACTOR, TO 150 PSI (MIN.) FOR A MINIMUM OF 5 MINUTES, WITNESSED BY CARSON CITY WATER UTILITY, PRIOR TO PERFORMING TAP.
5. REFERENCE "WATER GENERAL NOTES" DWG. C-3.1.1, FOR HOT-TAP SCHEDULING INFORMATION.

NO.	REVISION	DATE	STANDARD DETAIL FOR PUBLIC WORKS CONSTRUCTION	SECTION CARSON CITY
			TAPPING SLEEVE	DRAWING NO. C-3.1.3 (203,307)
APPROVED BY:		07/09		DATE 7/2009

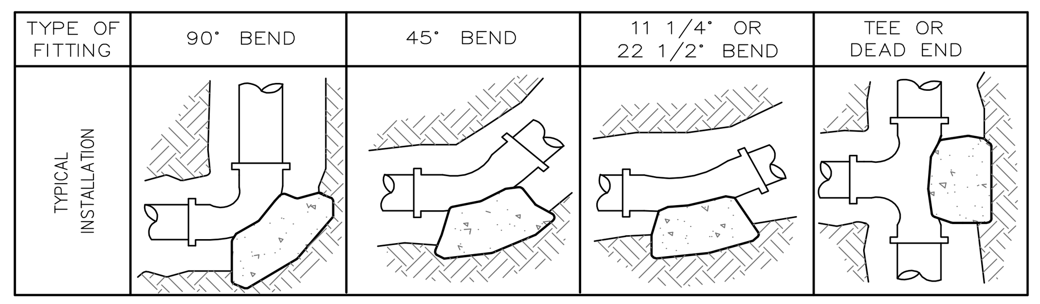

THRUST BLOCK BEARING AREA (SQ. FT.)

SIZE OF PIPE \ TYPE OF FITTING	90° BEND	45° BEND	11 1/4° OR 22 1/2° BEND	TEE OR DEAD END	TEE W/PLUG	CROSS W/PLUG
4"	2	1	1	2	2	2
6"	4	4	2	4	4	4
8"	7	4	2	5	7	7
10"	12	6	3	8	12	12
12"	16	10	5	12	16	16
14"	20	12	6	14	20	20
16"	27	15	8	18	27	27
18"	45	25	13	32	45	45
24"	65	35	18	46	65	65

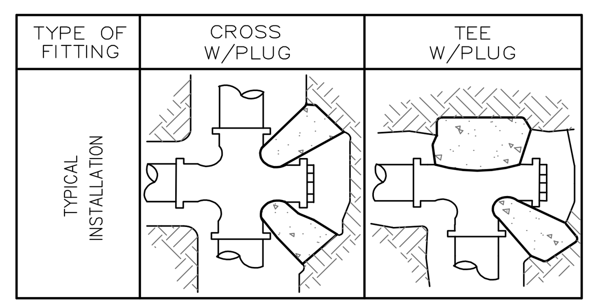

NOTES:

1. THRUST BLOCKS TO BE CONSTRUCTED OF CONCRETE CONFORMING TO 337.10 OF THE SSPWC AND SHALL HAVE A MINIMUM COMPRESSIVE STRENGTH OF 4000 PSI @ 28 DAYS.
2. AREAS GIVEN ARE FOR CLASS 150 PIPE AT WORKING AND TESTING PRESSURE OF 150 P.S.I., WITH 2000 P.S.F. BEARING CAPACITY. INSTALLATIONS USING DIFFERENT PIPE, TEST PRESSURES, AND/OR SOIL TYPES SHOULD HAVE AREAS ADJUSTED ACCORDINGLY, SUBJECT TO THE APPROVAL OF THE CARSON CITY ENGINEER OR PUBLIC WORKS DIRECTOR.
3. THRUST BLOCKS SHALL BE POURED AGAINSTALL UNDISTURBED SOIL.
4. JOINTS, FLANGES, NUTS, BOLTS AND FACE OF PLUG SHALL BE KEPT CLEAR OF CONCRETE.

NO.	REVISION	DATE	STANDARD DETAIL FOR PUBLIC WORKS CONSTRUCTION	SECTION CARSON CITY
			THRUST BLOCKS	DRAWING NO. C-3.1.14
APPROVED BY:		07/09		DATE 7/2009

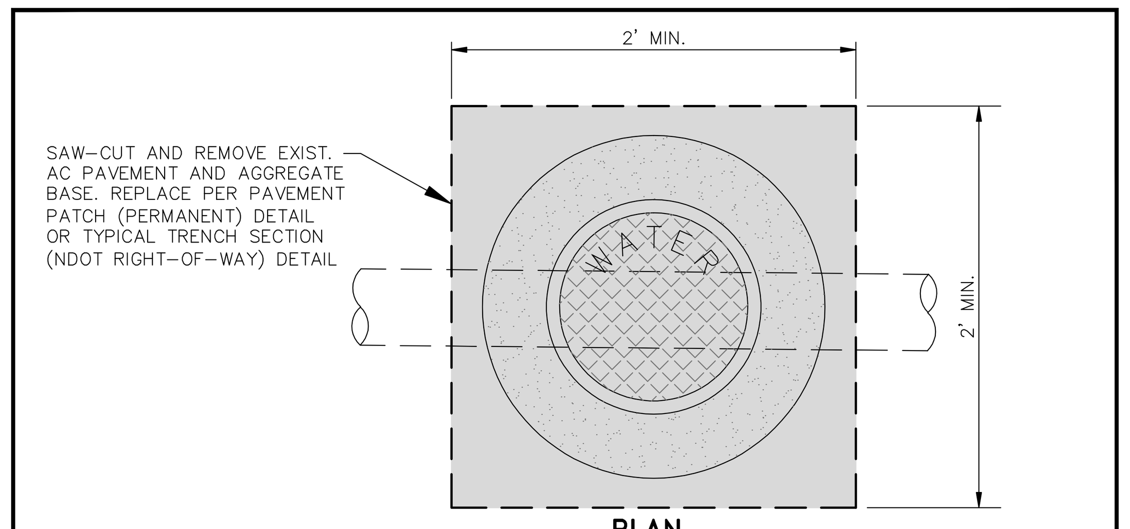

PLAN
NTS

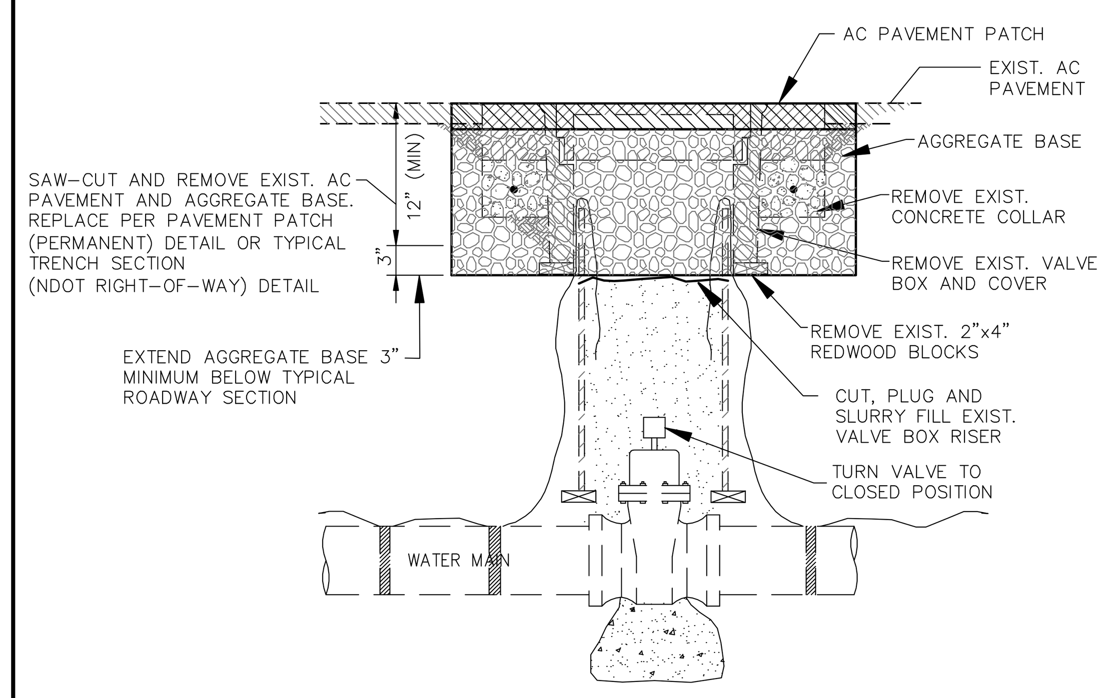

TYPICAL SECTION
NTS

NO.	REVISION	DATE	STANDARD DETAIL FOR PUBLIC WORKS CONSTRUCTION	SECTION CARSON CITY	
			VALVE ABANDONMENT	DRAWING NO. PENDING	
APPROVED BY:		4/13		DATE 3/2013	PAGE xx

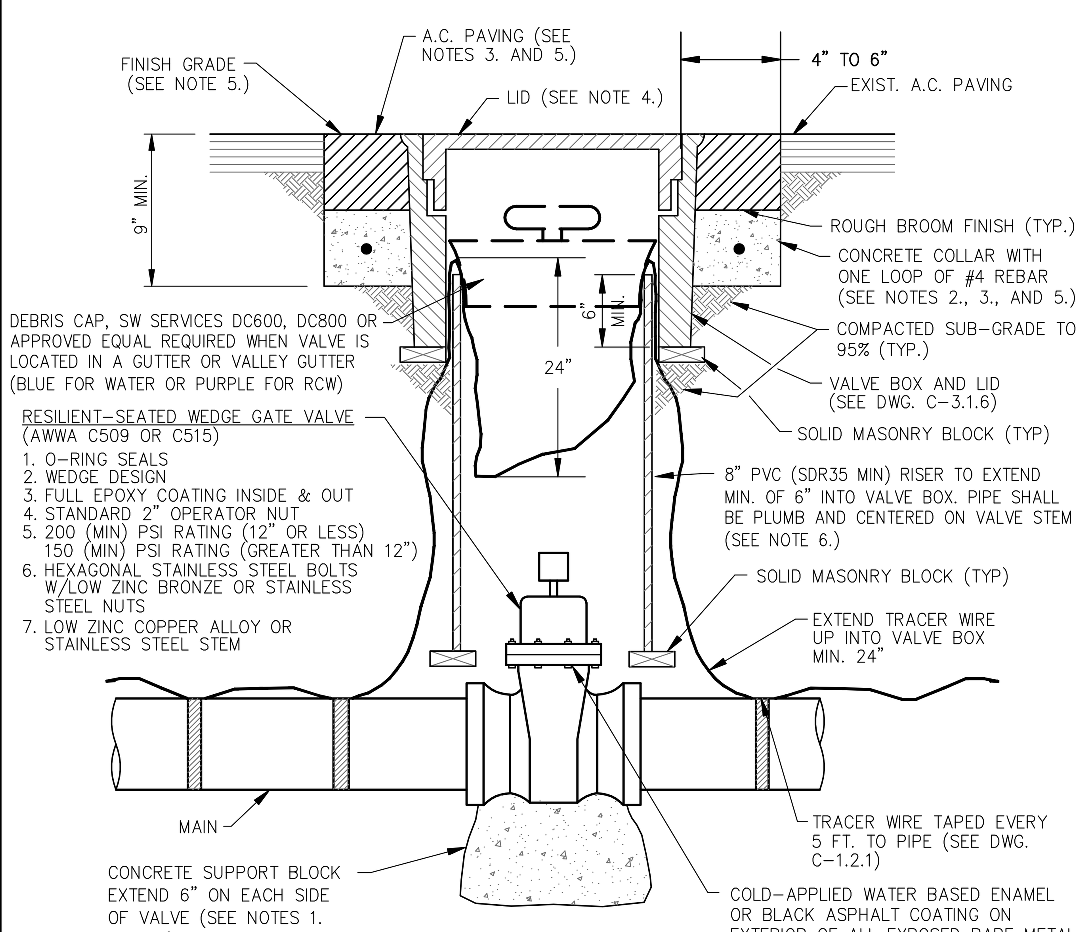

TYPICAL SECTION
NTS

NOTES:

1. SUPPORT BLOCKING SHALL BE POURED AGAINSTALL UNDISTURBED SOIL AND NOT PREVENT ACCESS TO BOLT ASSEMBLY OR VALVE JOINTS.
2. CONCRETE SHALL CONFORM TO THE SSPWC SECTION 337.10. REBAR SHALL ONLY BE USED WHEN THE VALVE BOX IS LOCATED OUTSIDE PAVED AREAS.
3. THE CONCRETE COLLAR SHALL BE LEFT 2 1/2 INCHES - 3 INCHES BELOW FINISHED ASPHALT SURFACE. APPLY AN APPROVED TACK COAT (CONFORMING TO THE SSPWC SECTION 316) AND FILL VOID BETWEEN ADJACENT PAVEMENT AND FRAME WITH TYPE 3 PG 64-22 PAVING (CONFORMING TO THE SSPWC SECTION 320). APPLY FOG SEAL (CONFORMING TO THE SSPWC SECTION 317) TO THE ASPHALT SURFACE. ALL CUTS IN PAVING SHALL BE STRAIGHT AND EVEN. EXCEPTION: WHEN STRUCTURE NOT LOCATED IN ASPHALT PAVEMENT OR IN AN UNPAVED AREA, EXTEND CONCRETE TO FINISH GRADE.
4. LIDS SHALL BE SET FLUSH WITH FINISH GRADE UNLESS OTHERWISE NOTED.
5. WHEN LOCATED IN NDOT RIGHT-OF-WAY, CONCRETE COLLAR SHALL CONFORM TO NDOT STANDARD PLAN SHT R-4.3.3 AND STANDARD SPECIFICATION 609.
6. RISER COLOR SHALL BE BLUE, OR SAME COLOR AS MAIN FOR WATER APPLICATIONS, PURPLE FOR RECLAIMED WATER APPLICATIONS, AND GREEN FOR SANITARY SEWER APPLICATIONS.
7. VALVES ON FIRE LINES SHALL BE UL/FM APPROVED AND MEET ALL APPLICABLE NFPA REQUIREMENTS.

NO.	REVISION	DATE	STANDARD DETAIL FOR PUBLIC WORKS CONSTRUCTION	SECTION CARSON CITY
			GATE VALVE	DRAWING NO. C-3.1.4 (203,307)
APPROVED BY:		07/09		DATE 7/2009

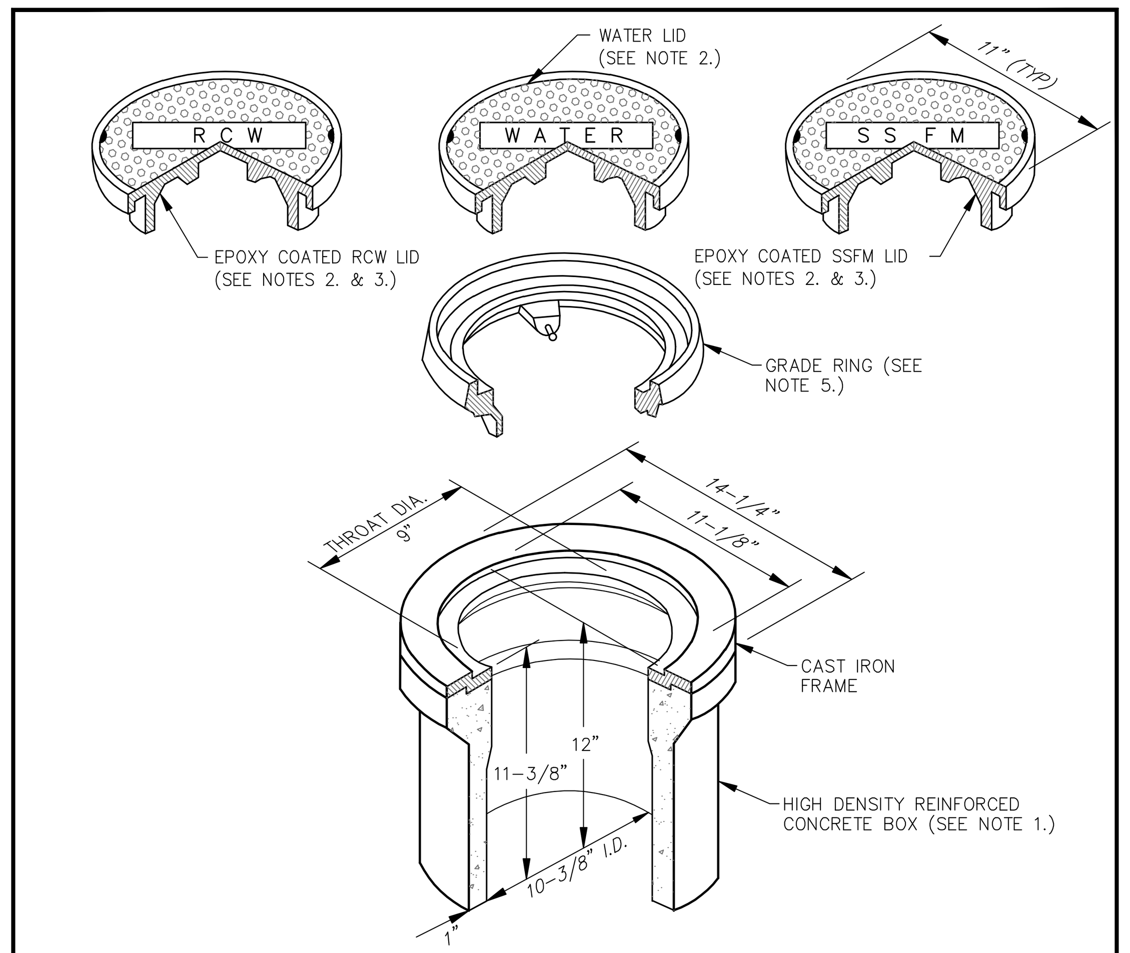

NOTES:

1. VALVE BOX AND LID SHALL BE H20 TRAFFIC RATED WITH A MINIMUM INSIDE DIAMETER OF 10 INCHES (CHRISTY G5 TRAFFIC VALVE BOX & LID).
2. CAST IRON LID SHALL BE MARKED AT THE FACTORY "WATER" FOR WATER APPLICATIONS, "RECLAIMED WATER" OR "RCW" FOR RECLAIMED WATER APPLICATIONS, AND "SS FORCE MAIN" OR "SSFM" FOR SANITARY SEWER APPLICATIONS.
3. FOR RECLAIMED WATER AND SANITARY SEWER APPLICATIONS, CAST IRON LID SHALL BE EPOXY COATED AT THE FACTORY, OR POWDER COATED, COLOR SHALL BE PURPLE FOR RECLAIMED WATER APPLICATIONS AND GREEN FOR SANITARY SEWER APPLICATIONS.
4. VALVE BOX SHALL BE SET OR ADJUSTED TO GRADE PER DRAWING NO. C-3.1.4, RISER FOR ADJUSTED VALVE BOX SHALL BE PER DRAWING NO. C-3.1.4. FOR OVERLAY ADJUSTMENTS, RISER WILL NOT REQUIRE REPLACEMENT OR EXTENSION IF IT EXTENDS A MINIMUM OF 2 INCHES INTO ADJUSTED VALVE BOX.
5. GRADE RING IS NOT ALLOWED FOR NEW VALVE BOX INSTALLATIONS. CAST IRON GRADE RING (CHRISTY G5 GRADE RING) MAY BE USED FOR OVERLAY ADJUSTMENTS WHEN OVERLAY DEPTH EQUALS THE GRADE RING DEPTH. NO MORE THAN ONE GRADE RING ALLOWED PER BOX.

NO.	REVISION	DATE	STANDARD DETAIL FOR PUBLIC WORKS CONSTRUCTION	SECTION CARSON CITY
			VALVE BOX & LID	DRAWING NO. C-3.1.6 (203,306,307)
APPROVED BY:		07/09		DATE 7/2009

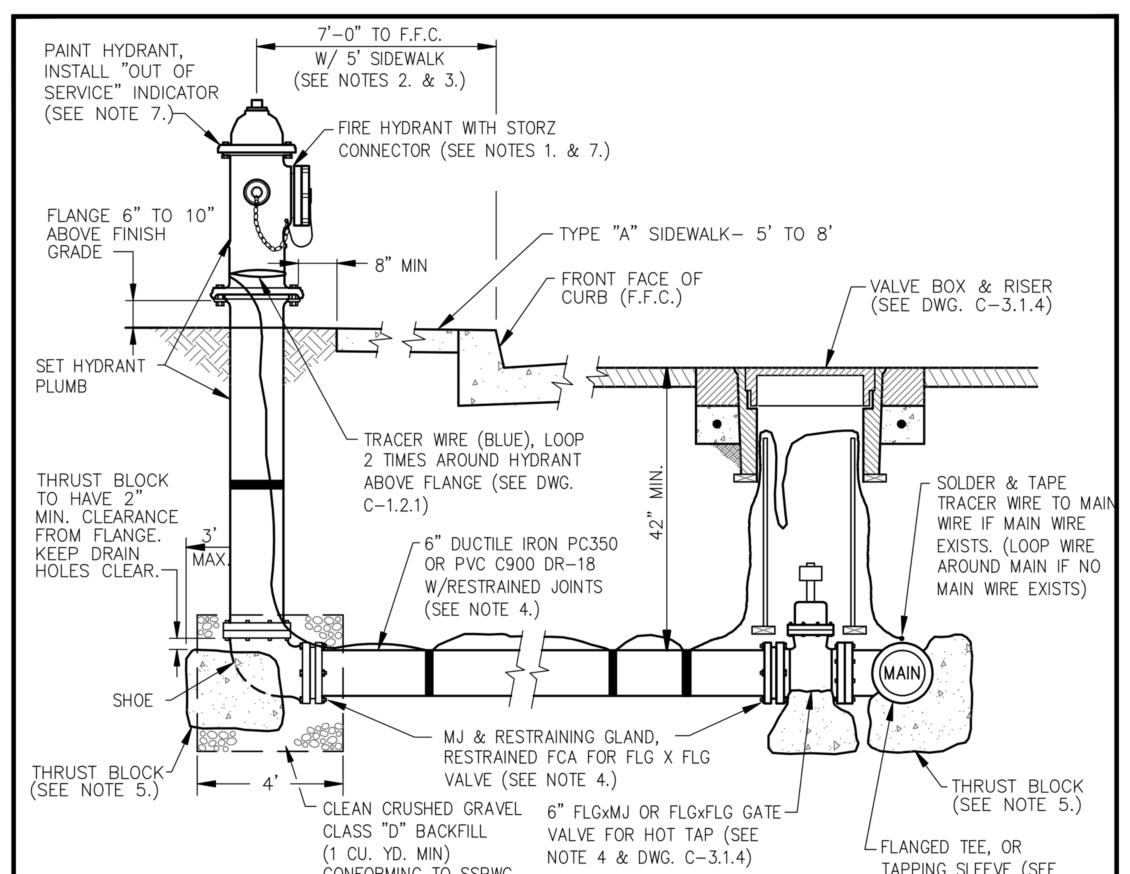

TYPICAL SECTION
NTS

NOTES:

1. FIRE HYDRANTS SHALL BE MUELLER SUPER CENTURION 250 OR WATEROUS 5 1/4 INCH PACER (WB-67-250). ALL HYDRANTS SHALL HAVE HARRINGTON HIHS 5 INCH INTEGRAL HYDRANT STORZ, OR APPROVED EQUAL, WITH BLIND CAP & CABLE AND "OUT OF SERVICE" INDICATOR. OPERATING NUT SHALL BE 1-1/2 INCH PENTAGON. VALVE OPENING SHALL BE 5-1/4 INCHES AND OPEN COUNTER-CLOCKWISE. HYDRANTS SHALL HAVE (2) 2-1/2 INCH HOSE NOZZLES WITH AMERICAN NATIONAL HOSE COUPLING THREADS, (NO SUBSTITUTIONS).
2. HYDRANT SHALL BE INSTALLED SO AS TO PROVIDE **CLEARANCE** IN ALL DIRECTIONS PER **DWG. C-3.1.7.1.**
3. FOR 9 FEET-0 INCHES OR WIDER SIDEWALK OR OFFSET SIDEWALK, HYDRANT SHALL BE 2 FEET-0 INCHES TO FRONT FACE OF CURB. IF SIDEWALK IS NOT PRESENT, HYDRANT SHALL BE LOCATED 7 FEET-0 INCHES TO FRONT FACE OF CURB, EXCEPT IN DOWNTOWN AREA.
4. RESTRAINING GLANDS SHALL BE ROMAC GRIPRING PIPE RESTRAINER FOR MECHANICAL JOINT VALVES OR ROMAC RESTRAINED FCA FOR FLANGED VALVES OR APPROVED EQUAL. PIPE RESTRAINT SHALL BE ROMAC "600" SERIES RESTRAINING SYSTEM OR APPROVED EQUAL. RESTRAINING DEVICES SHALL BE FULL CIRCLE (NON POINT) LOADING TYPE. HYDRANT SHOE MAY BE AQUAGRIP, RESTRAINED MECHANICAL JOINT (MJ) OR APPROVED EQUAL.
5. THRUST BLOCKS SHALL HAVE THREE (3) SQUARE FEET MINIMUM AREA AND SHALL BE FORMED AGAINSTALL UNDISTURBED NATIVE OR BACKFILL COMPACTED TO 95%, AND CONFORM TO DWG. C-3.1.14. NO CONCRETE ON HYDRANT DRAIN HOLES OR BOLTS.
6. INSPECTION BY THE CARSON CITY INSPECTOR SHALL BE REQUIRED PRIOR TO BACKFILLING.
7. HYDRANTS SHALL BE PAINTED INTERNATIONAL ORANGE (RUST-OLEUM 7400 HIGH GLOSS ALKYD ENAMEL OR APPROVED EQUAL). DO NOT PAINT 5 INCH STORZ, CAP OR CABLE. RECLAIMED WATER HYDRANTS SHALL BE PAINTED PURPLE. INSTALL "OUT OF SERVICE" INDICATOR COLLAR ON 2-1/2 INCH NOZZLE. INDICATOR SHALL BE HIGHLY VISIBLE, YELLOW WITH BLACK LETTERS, 2-1/2 INCH MINIMUM WIDTH WITH 1 INCH LETTERS STATING "OUT OF SERVICE". INDICATOR SHALL BE "CALPICO" OR EQUAL APPROVED BY THE CARSON CITY ENGINEER OR PUBLIC WORKS DIRECTOR.

NO.	REVISION	DATE	STANDARD DETAIL FOR PUBLIC WORKS CONSTRUCTION	SECTION CARSON CITY
			FIRE HYDRANT ASSEMBLY	DRAWING NO. C-3.1.7 (203,307)
APPROVED BY:		07/09		DATE 7/2009

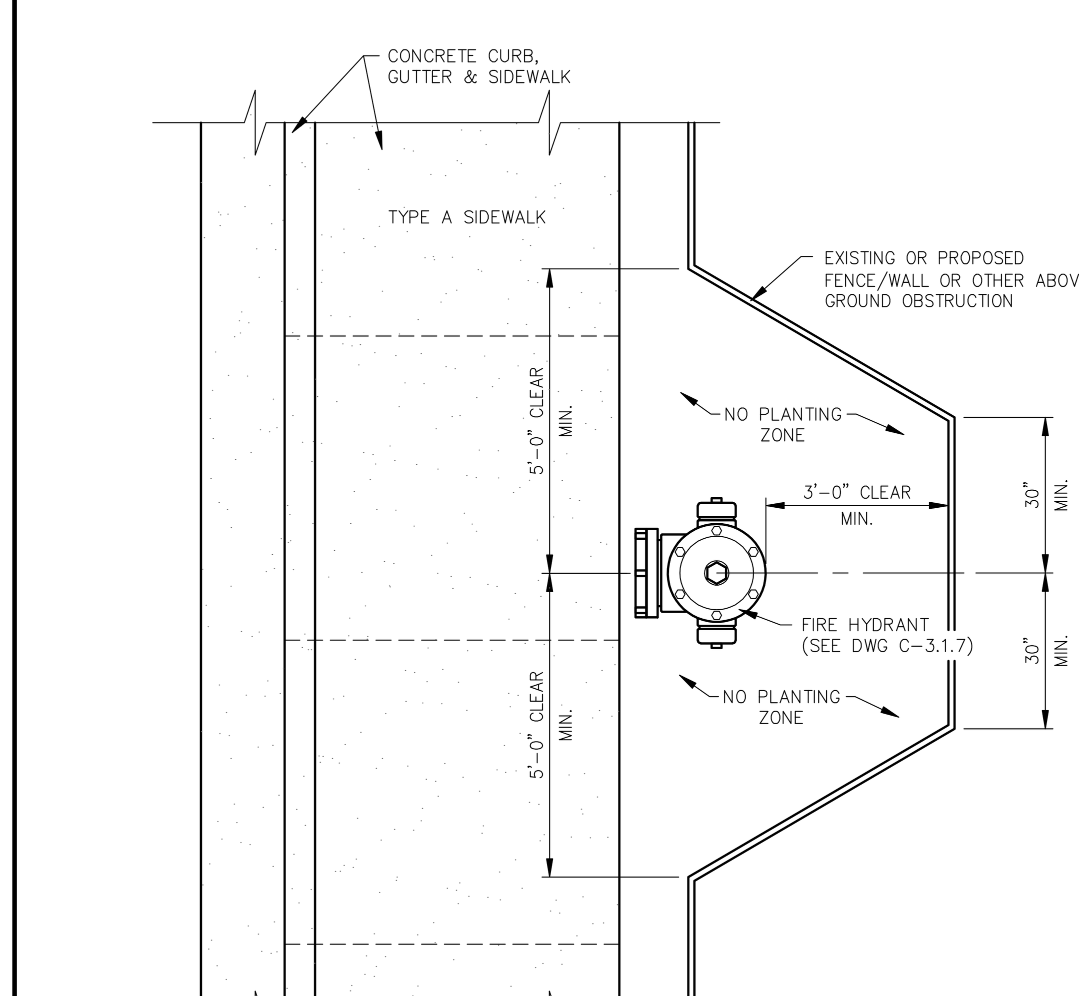

NOTES:

1. SEE DWG. C-3.1.7 FOR FIRE HYDRANT INSTALLATION.
2. INSTALL OR RELOCATE EXISTING FENCE/WALL/LANDSCAPING/MISC IMPROVEMENTS ETC. TO PROVIDE THE MINIMUM CLEARANCE AROUND THE HYDRANT AS SHOWN.

NO.	REVISION	DATE	STANDARD DETAIL FOR PUBLIC WORKS CONSTRUCTION	SECTION CARSON CITY
			FIRE HYDRANT SETBACK /FENCE CLEARANCE	DRAWING NO. C-3.1.7.1 (307)
APPROVED BY:		07/09		DATE 7/2009

DESIGNED BY: BD
DRAWN BY: BD
CHECKED BY: JS
DWG NO.: 4-1201MAFLWR
SCALE (HORIZ): N/A
SCALE (VERT): X"=XX'
PLOT DATE: 2013 JULY 18

CARSON CITY
PUBLIC WORKS DEPARTMENT
3505 BUTTI WAY CARSON CITY, NEVADA 89701
PH: 887-2355 FAX: 887-2112

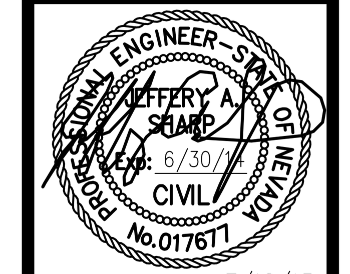

7/18/13

REV.	DATE	DESCRIPTION	BY	APP'D

MAYFLOWER & BEL AIRE WAY WATER MAIN REPLACEMENT
PROJECT No. 4.1201

DETAILS

SHEET 7 OF 7

BID SET - NOT FOR CONSTRUCTION

H:\PROJECTS\4.1201 Waterline Replacement\dwg\4-1201MAFLWR.dwg;