SUGARLOAF COMMUNICATIONS TOWER SITE

250 CONESTOGA DRIVE - CARSON CITY, NEVADA

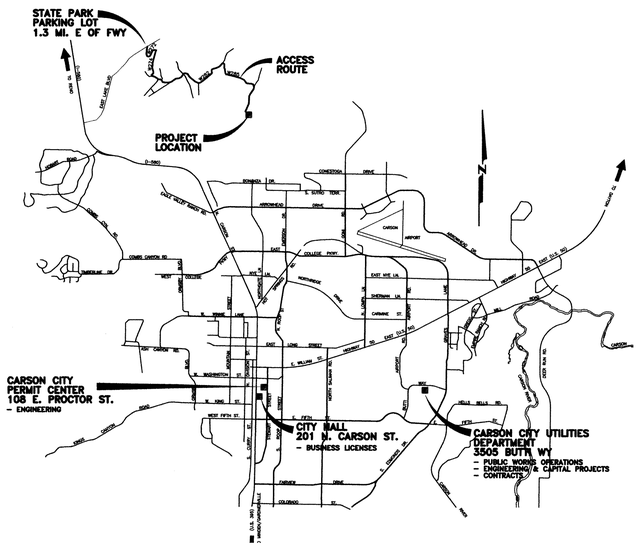

VICINITY MAP

NOT TO SCALE

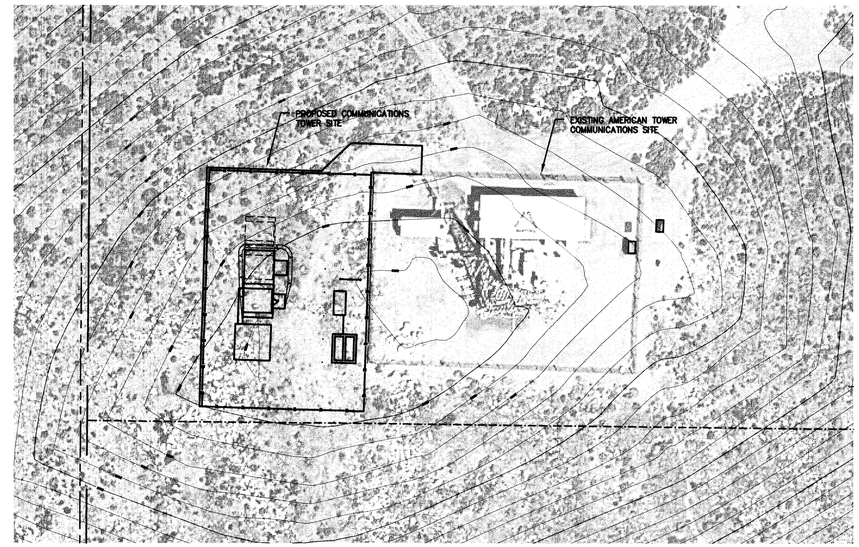

PROPOSED SITE

SCALE: 1" = 30'

SCALE

30 0 15 30

HORIZ: 1" = 30'

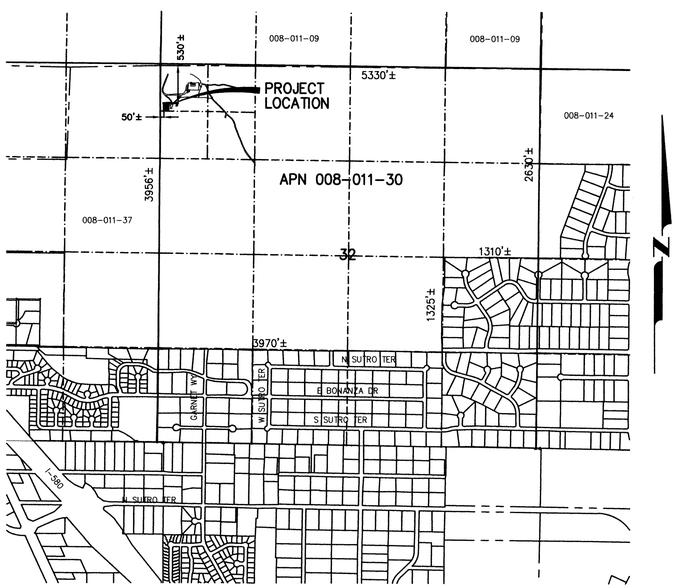

PROJECT LOCATION

NOT TO SCALE

APPLICANT:

CARSON CITY PUBLIC WORKS DEPT.
OPERATIONS DIVISION
3505 BUTTI WAY
CARSON CITY, NV 89701
DARREN ANDERSON (775) 283-7584

OWNER:

USA / BLM
LEASE HOLDER : CARSON CITY

REQUEST:

COMMUNICATIONS SITE FOR CONSTRUCTION OF NEW COMMUNICATIONS TOWER

PARCEL NUMBER:

008-011-30

ZONING:

PR – PUBLIC REGIONAL

LOCATION:

250 CONESTOGA DR.
N/W 1/4 OF THE NW 1/4 OF SEC. 32
T 16 R 20 M.D.B.& M.

SHEET INDEX:

C1 ..... TITLE SHEET
C2 ..... SITE PLAN
C3 ..... GRADING PLAN
C4 ..... DETAILS
C5 ..... TOWER DETAILS
E1 ..... ELECTRICAL TITLE SHEET
E2 ..... ELECTRICAL SINGLE LINE & ELEVATIONS
E3 ..... UTILITY & GROUNDING PLAN
E4 ..... ELECTRICAL DETAILS

APPLICATION NO. _____.

DESIGNED BY: DA
DRAWN BY: BD
CHECKED BY: TG
DWG NO.: 3-13048S1-C3D
SCALE (HORIZ): AS SHOWN
SCALE (VERT):
PLOT DATE: 2014APR22

CARSON CITY
PUBLIC WORKS DEPARTMENT
3505 BUTTI WAY CARSON CITY, NEVADA 89701
PH: 887-2355 FAX: 887-2112

CIVIL ONLY

PROFESSIONAL ENGINEER - STATE OF NEVADA
THOMAS B. BRUNDY
Exp: 6/30/15
CIVIL
No. 18808

4-22-14

REV.	DATE	DESCRIPTION	BY	APP'D

SUGARLOAF COMMUNICATIONS TOWER SITE

TITLE SHEET

SHEET C1 OF 9

H:\PROJECTS\3-1304 Sugarloaf Communication Site\03. DESIGN\01. CAD FILES\dwg\3-13048S1-C3D.dwg

NOTES:

1. RADIO TOWER:
CONTRACTOR TO ENGINEER, DELIVER AND INSTALL AN ANSI/TIA-222 REV G. CLASS III 80' LATTICE TOWER, INCLUDING FOUNDATION, WITH CLIMBER FACILITIES AND FALL ARREST SYSTEM IN ACCORDANCE WITH ANSI/ASSE Z359 STANDARD. THE TOWER MUST BE ABLE TO SUPPORT ALL EQUIPMENT SHOWN ON SHEET C5 INCLUDING FUTURE EQUIPMENT.

2. ALL CONCRETE:
UNLESS OTHERWISE NOTED PORTLAND CEMENT CONCRETE (PCC) SHALL HAVE THE FOLLOWING CHARACTERISTICS; MASTERFIBER MAC MATRIX MACRO FIBERS OR APPROVED EQUAL (AT A MINIMUM OF 3 POUNDS PER CUBIC YARD), 4000 PSI MINIMUM COMPRESSIVE STRENGTH AT 28 DAYS, MINIMUM 6 SACKS OF CEMENT PER CUBIC YARD, W/MAXIMUM WATER-CEMENT RATIO OF 0.45, AIR ENTRAINMENT 6%+/-1.5%, SLUMP 1-4 INCHES. ALL MATERIALS SHALL CONFORM TO SECTION 202 OF THE STANDARD SPECIFICATIONS FOR PUBLIC WORKS CONSTRUCTION FOR CONCRETE EXPOSED TO FREEZE THAW ENVIRONMENTS. ALL SLABS TO BE 6" PCC ON 6" BASE COMPACTED TO 95% UNLESS OTHERWISE NOTED.

3. PROPANE TANKS AND GENERATOR TO BE ANCHORED TO SLABS WITH 4-1/2" ANCHOR BOLTS AND 3"x 3" PLATE WASHERS. BUILDING AND POWER PEDESTALS TO BE ANCHORED AS SHOWN ON ELEVATIONS THIS SHEET.

4. ICE BRIDGE SHALL BE 24" WIDE, HOT DIP GALVANIZED, SOLID BRIDGE W/ TRIPLE TRAPEZE KITS. ICE BRIDGE SHALL BE GROUNDED WITH AN EXOTHERMIC WELD.

5. CONTRACTOR TO CLEAR SITE OF LOOSE ROCKS AND VEGETATION TO ALLOW VEHICLE ACCESS AROUND THE SITE. CONTRACTOR TO RESTORE ANY DISTURBED LAND OUTSIDE OF THE PROJECT SITE TO ITS ORIGINAL CONDITION.

6. CONTRACTOR IS RESPONSIBLE FOR ALL EXCAVATION, SUBGRADE PREPARATION, AND REMOVAL OF EXISTING OBSTRUCTIONS IN ORDER TO INSTALL THE COMMUNICATION SITE FACILITIES.

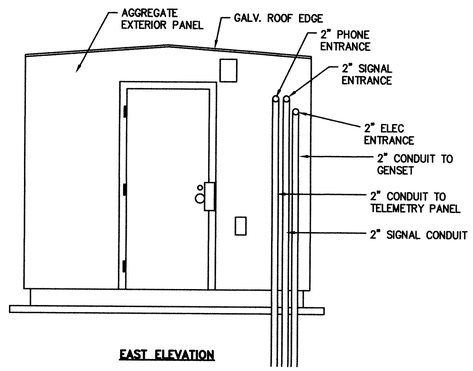

EAST ELEVATION

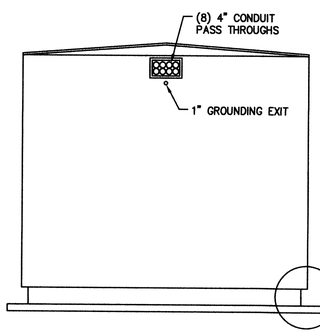

WEST ELEVATION

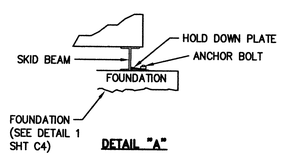

DETAIL "A"

SHELTER ELEVATIONS

NOT TO SCALE

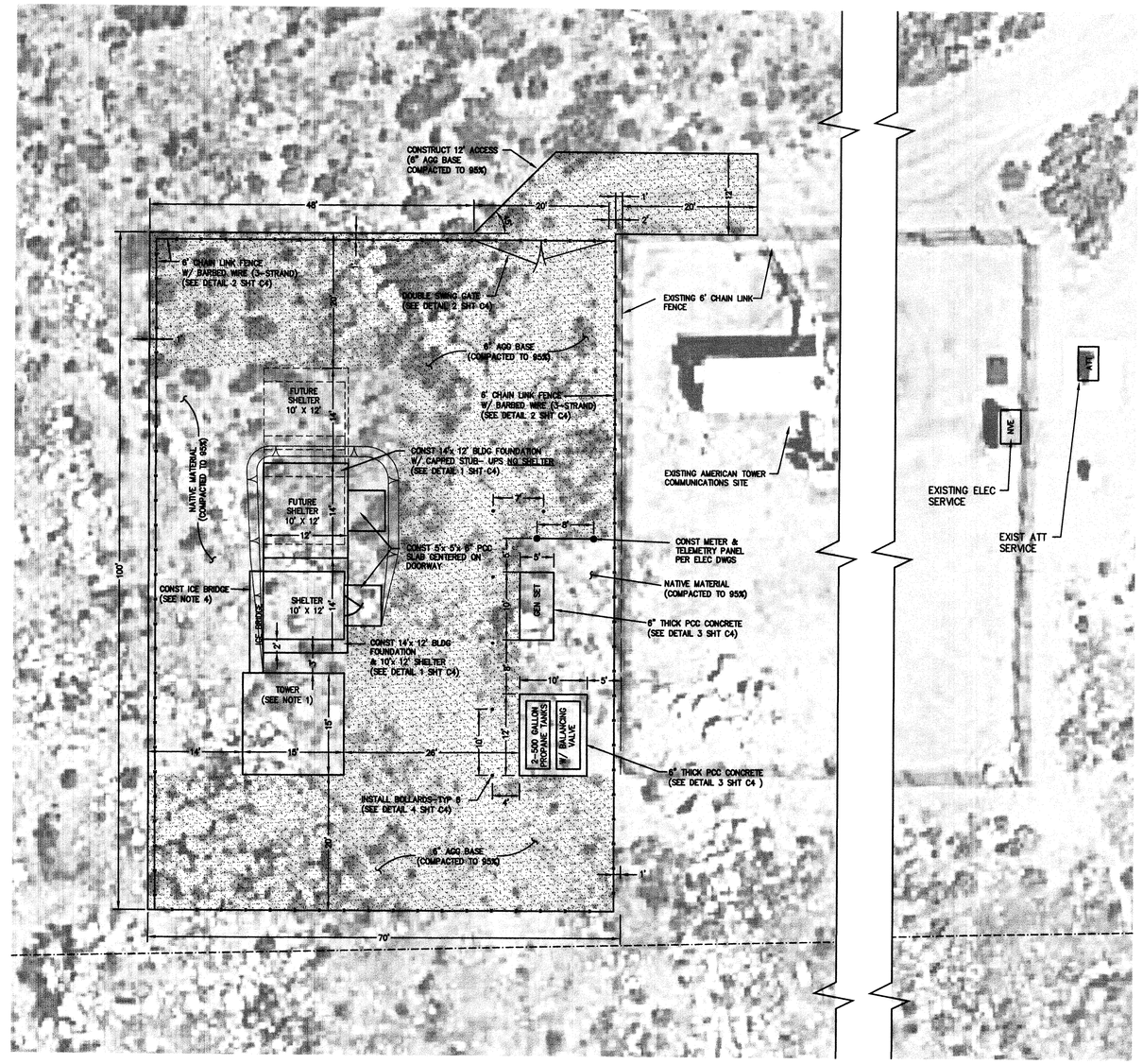

SITE PLAN

SCALE: 1" = 10'

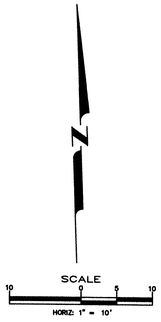

DESIGNED BY: DA
DRAWN BY: BD
CHECKED BY: TG
DWG NO.: DUCKCOMMBS1
SCALE (HORIZ): AS SHOWN
SCALE (VERT):
PLOT DATE: 2014APR22

CARSON CITY
PUBLIC WORKS DEPARTMENT
3505 BUTTI WAY CARSON CITY, NEVADA 89701
PH: 887-2355 FAX: 887-2112

CIVIL ONLY
PROFESSIONAL ENGINEER-STATE OF NEVADA
THOMAS GRUNDY
Exp: 6/30/15
CIVIL
No. 18806
4/22/14

REV.	DATE	DESCRIPTION	BY	APP'D

SUGARLOAF COMMUNICATIONS TOWER SITE

SITE PLAN

SHEET C2 OF 9

H:\PROJECTS\3.1.304 Sugarloaf Communication Site\02. DESIGN\01. CAD FILES\dwg\3-1-304BS1-C2D.dwg

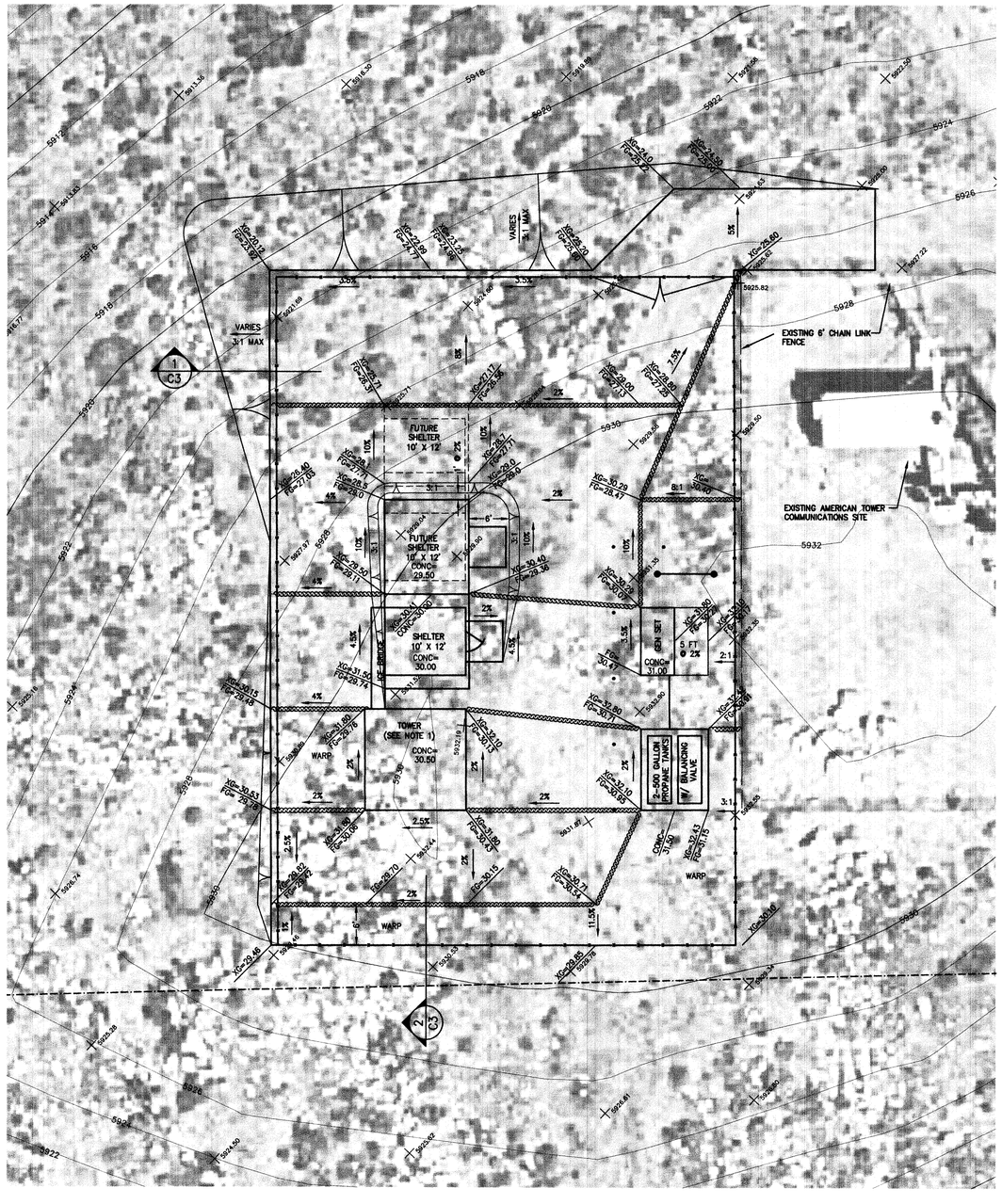

GRADING PLAN

SCALE: 1" = 10'

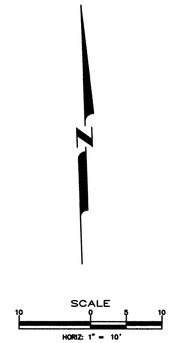

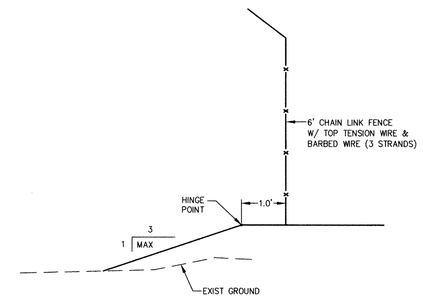

1/C3 FENCE GRADING SECTION

N.T.S.

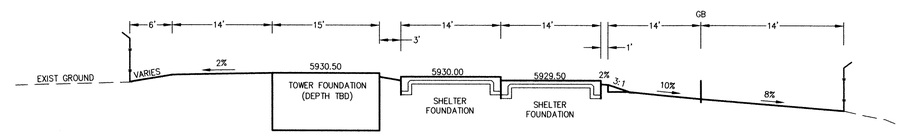

2/C3 SITE SECTION

N.T.S.

DESIGNED BY: DA
DRAWN BY: BD
CHECKED BY: TG
DWG NO.: DUCKCOMMBS1
SCALE (HORIZ): AS SHOWN
SCALE (VERT):
PLOT DATE: 2014APR22

CARSON CITY PUBLIC WORKS DEPARTMENT

3505 BUTTI WAY CARSON CITY, NEVADA 89701
PH: 887-2355 FAX: 887-2112

CIVIL ONLY
PROFESSIONAL ENGINEER-STATE OF NEVADA
THOMAS B. GRUNDY
Exp: 6/30/15
CIVIL
No. 18808
4/22/14

REV.	DATE	DESCRIPTION	BY	APP'D

SUGARLOAF COMMUNICATIONS TOWER SITE

GRADING PLAN

SHEET C3 OF 9

H:\PROJECTS\3.1304 Sugarloaf Communication Site\02. DESIGN\01. CAD FILES\dwg\3-1304B1-C3D.dwg

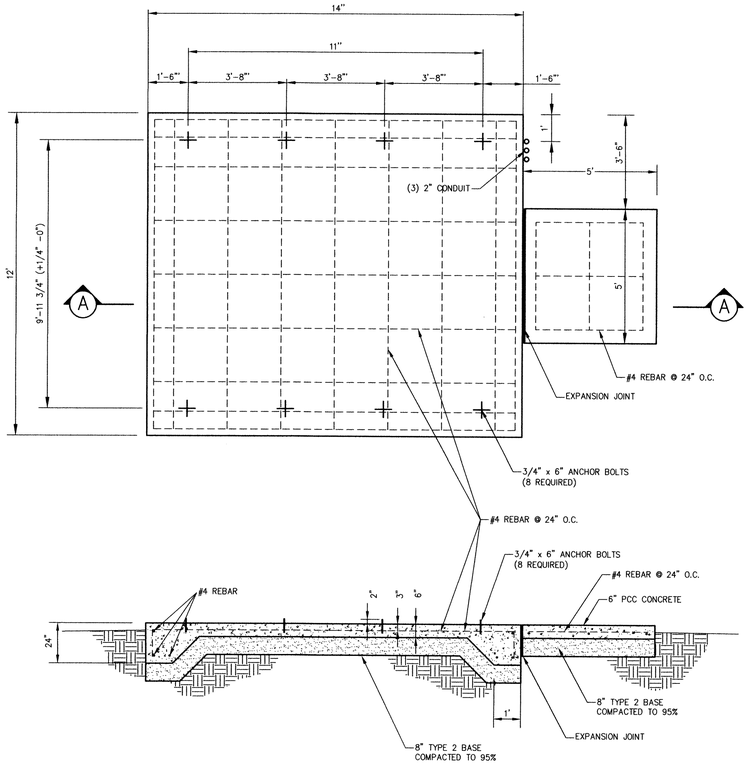

SECTION A–A

NOTES:

1. ALL CONCRETE:
   UNLESS OTHERWISE NOTED PORTLAND CEMENT CONCRETE (PCC) SHALL HAVE THE FOLLOWING CHARACTERISTICS; 4000 PSI MINIMUM COMPRESSIVE STRENGTH AT 28 DAYS, MINIMUM 6 SACKS OF CEMENT PER CUBIC YARD, W/MAXIMUM WATER–CEMENT RATIO OF 0.45, AIR ENTRAINMENT 6%+/–1.5%, SLUMP 1–4 INCHES. ALL MATERIALS SHALL CONFORM TO SECTION 202 OF THE STANDARD SPECIFICATIONS FOR PUBLIC WORKS CONSTRUCTION FOR CONCRETE EXPOSED TO FREEZE THAW ENVIRONMENTS. ALL SLABS TO BE 6" PCC ON 6" BASE COMPACTED TO 95% UNLESS OTHERWISE NOTED.

2. ALL REBAR TO BE PLACED 3" OFF SOIL AND HAVE A MINIMUM OF 2" CONCRETE COVER.

1/C4 FOUNDATION DETAIL

SCALE: 3/8" = 1'-0"

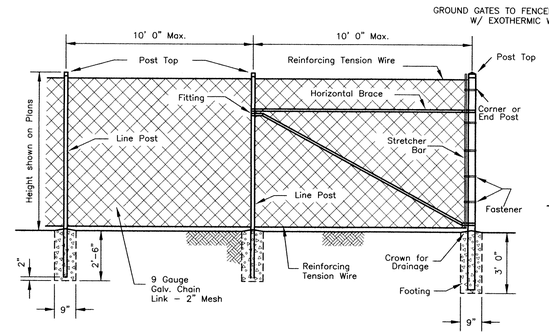

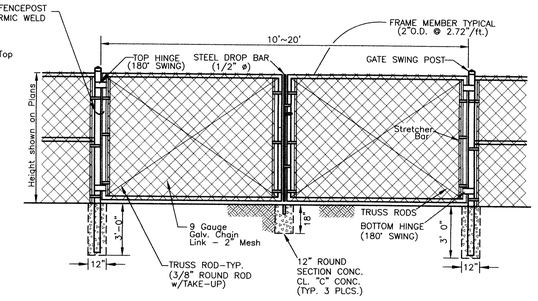

DOUBLE SWING GATE

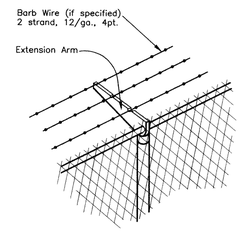

EXTENSION ARM AND BARBED WIRE

NOTE:

1. Fencing shall be chain link and shall consist of galvanized chain link fabric on steel posts.
   (a) All post tops shall be fitted with suitable finials.
   (b) Braces shall be spaced approximately 12" below top of terminal posts and shall extend from end, gate, or corner posts to first adjacent line post.
   (c) All fittings shall be hot dipped galvanized malleable, cast iron, or pressed steel.
   (d) Top and bottom selvages of the fence shall have a twisted and barbed finish.
2. Barbed Wire, Extension Arms, and Top Horizontal Rails shall be installed only when shown on the plans and/or called for in the special provisions.

TABLE 1
(for chain link fence 72" and less)

Location	Min. Size	Min. Weight (#/ft.)
End, Corner and Pull	2.351 O.D.	3.10
Line	1.869 O.D.	2.72
Braces	1.630 O.D.	2.27
Top Rail	1.630 O.D.	2.27

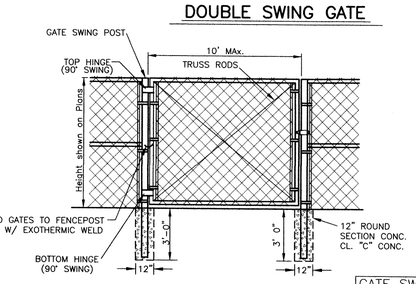

SINGLE GATE

GATE SWING POST DIA.

GATE SIZE	PIPE DIA.
6' and less	3" O.D.~5.79#/ft.
6' – 10'	4" O.D.~9.10#/ft.

2/C4 CHAIN LINK FENCE DETAIL

N.T.S.

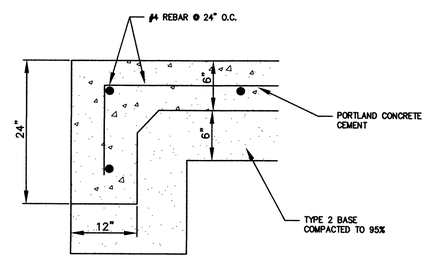

1. UNLESS OTHERWISE NOTED PORTLAND CEMENT CONCRETE (PCC) SHALL HAVE THE FOLLOWING CHARACTERISTICS; 4000 PSI MINIMUM COMPRESSIVE STRENGTH AT 28 DAYS, MINIMUM 6 SACKS OF CEMENT PER CUBIC YARD, W/MAXIMUM WATER–CEMENT RATIO OF 0.45, AIR ENTRAINMENT 6%+/–1.5%, SLUMP 1–4 INCHES. ALL MATERIALS SHALL CONFORM TO SECTION 202 OF THE STANDARD SPECIFICATIONS FOR PUBLIC WORKS CONSTRUCTION FOR CONCRETE EXPOSED TO FREEZE THAW ENVIRONMENTS. ALL SLABS TO BE 6" PCC ON 6" BASE COMPACTED TO 95% UNLESS OTHERWISE NOTED.

3/C4 PROPANE TANK AND GENERATOR FOUNDATION DETAIL

N.T.S.

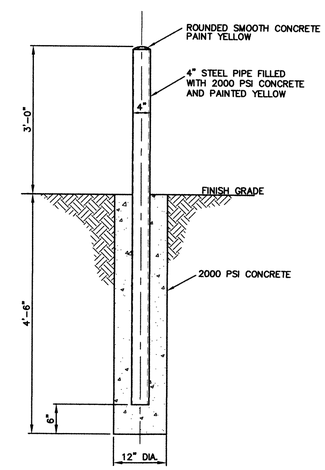

4/C4 PIPE BOLLARD DETAIL

N.T.S.

DESIGNED BY: DA
DRAWN BY: BD
CHECKED BY: TG
DWG NO.: DUCKCOMMBS1
SCALE (HORIZ): AS SHOWN
SCALE (VERT):
PLOT DATE: 2014APR22

CARSON CITY
PUBLIC WORKS DEPARTMENT
3505 BUTTI WAY CARSON CITY, NEVADA 89701
PH: 887-2355 FAX: 887-2112

CIVIL ONLY
PROFESSIONAL ENGINEER – STATE OF NEVADA
THOMAS GRUNDY
Exp: 6/30/15
CIVIL
No. 18808
04/22/14

REV.	DATE	DESCRIPTION	BY	APP'D

SUGARLOAF COMMUNICATIONS TOWER SITE

DETAILS

SHEET C4 OF 9

H:\PROJECTS\3.1304 Sugarloaf Communication Site\02. DESIGN\01. CAD FILES\dwg\3-1304BS1-C3D.dwg;