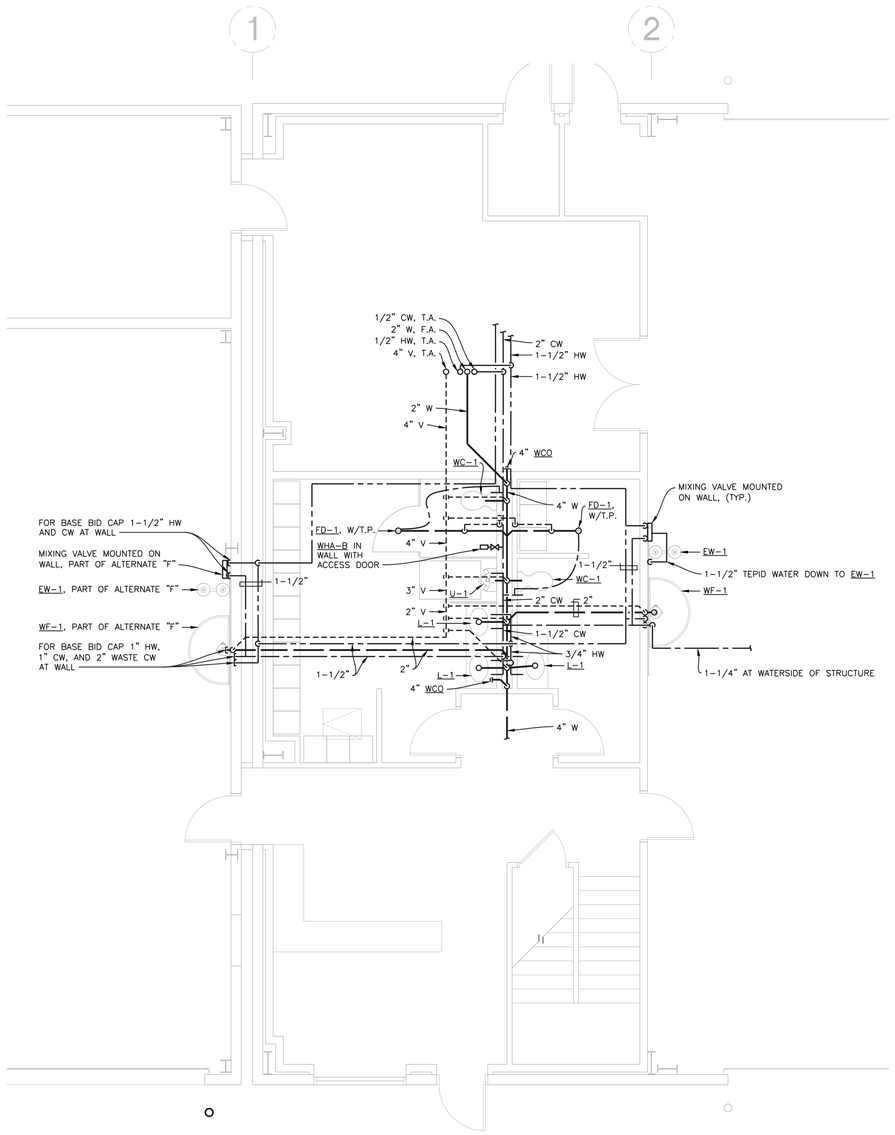

ENLARGED FIRST FLOOR PLUMBING PLAN (A / P2.2)

SCALE: 1/4" = 1'-0"

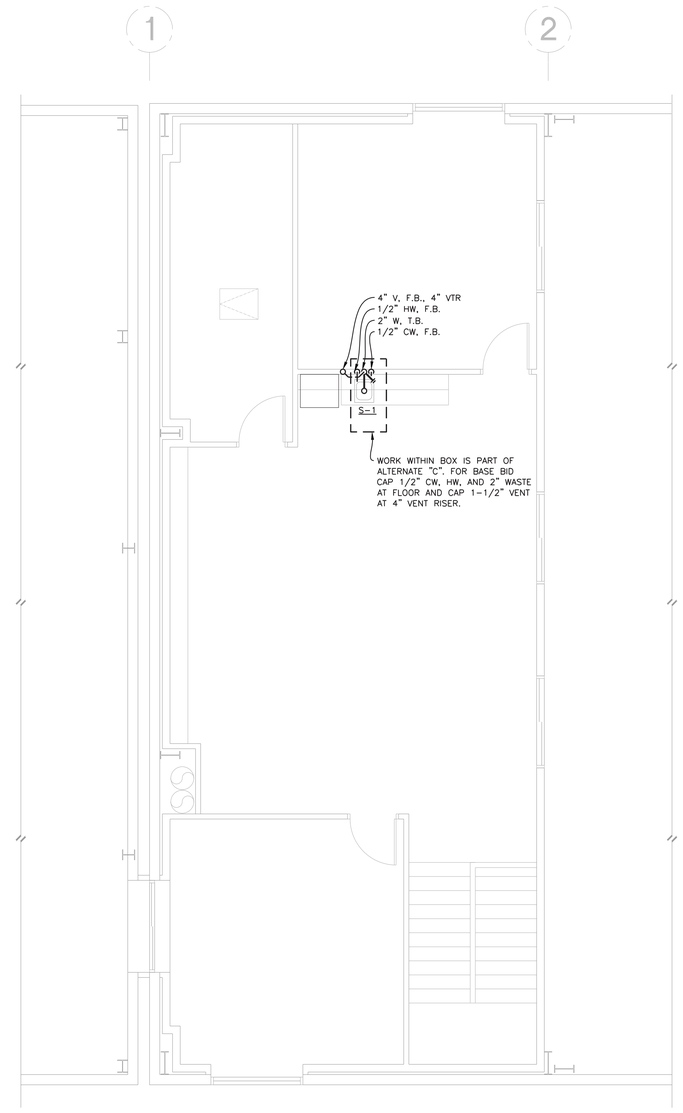

ENLARGED SECOND FLOOR PLUMBING PLAN (B / P2.2)

SCALE: 1/4" = 1'-0"

GML ARCHITECTS · LLC
architects & planners
1575 DELUCCHI LN · SUITE 120
RENO · NEVADA 89502
P · 775 · 829 · 8814
F · 775 · 829 · 8828

PROFESSIONAL ENGINEER, STATE OF NEVADA
STEVEN H. AINSWORTH
Exp. 12-31-14
MECHANICAL
No. 8139

6.4.14

CARSON CITY FLEET MAINTENANCE FACILITY EXPANSION

CARSON CITY, NEVADA

DATE	6-2-14
JOB NO	796
DRAWN	JSH/ER
CHECKED	SA

1 BUILDING DEPARTMENT COMMENTS 4/24/14

ENLARGED PLUMBING PLANS

P2.2

AINSWORTH ASSOCIATES
MECHANICAL ENGINEERS
3741 BUSINESS DR.
SACRAMENTO, CA 95820
TEL: 916-737-6014
FAX: 916-737-6015
1420 HOLCOMB AVE., SUITE 201
RENO, NV 89502
TEL: 775-329-9100
FAX: 775-329-9105
www.aa-me.com
JOB: 2013-056

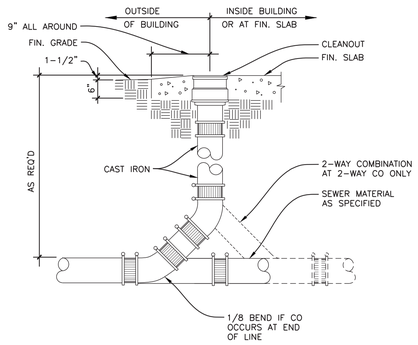

CLEAN-OUT TO GRADE

NO SCALE AAP1001

1 / P6.1

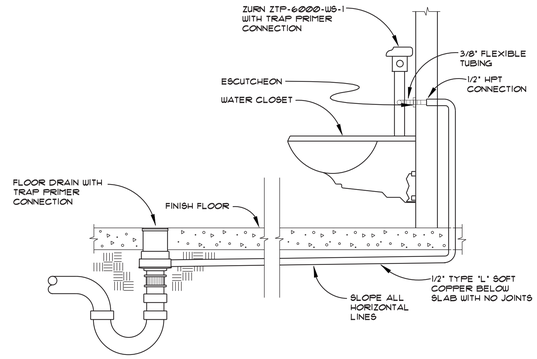

FLUSH VALVE/TRAP PRIMER

NO SCALE AAP505

2 / P6.1

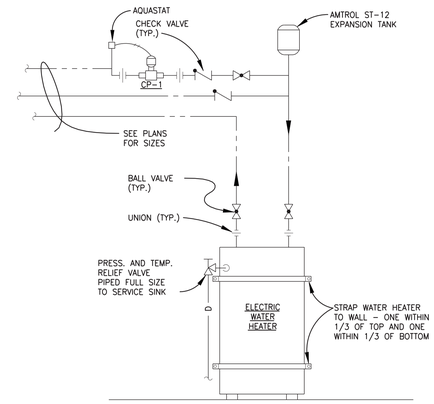

WATER HEATER

NO SCALE

3 / P6.1

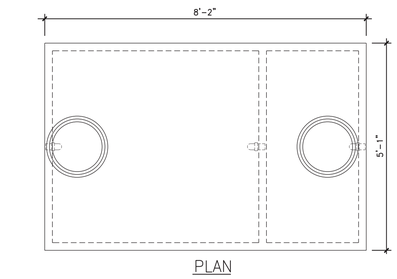

PLAN

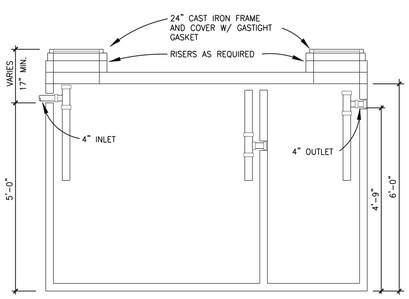

SECTION

LIQUID CAPACITY:	750 GALLONS
BOX DESIGN LOAD:	H-20 TRAFFIC UP TO 6 FT. COVER

SAND/OIL INTERCEPTOR

NOT TO SCALE

4 / P6.1

⚠1 NOT USED

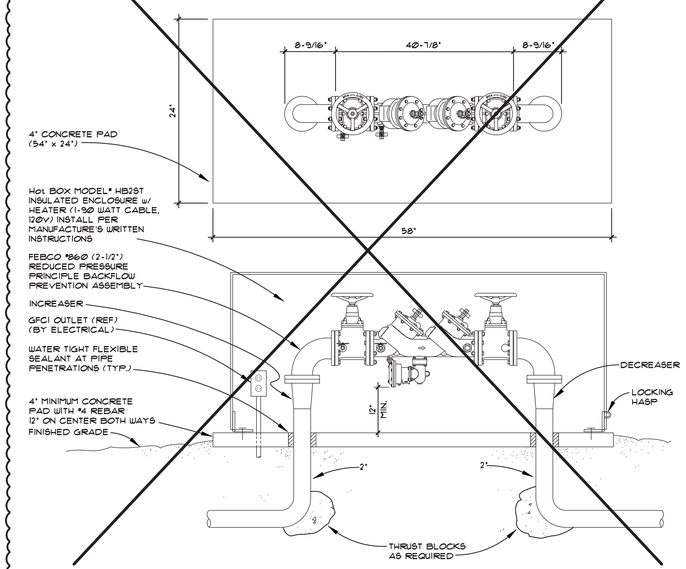

RP BACKFLOW PREVENTOR

NOT TO SCALE

5 / P6.1

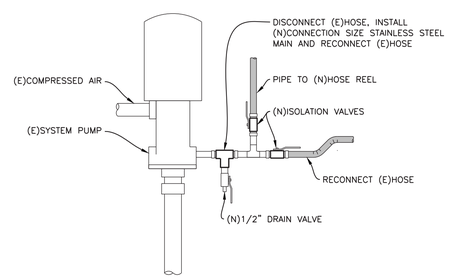

(E)LUBRICATION AND OIL PUMP

NOT TO SCALE ⚠1

6 / P6.1

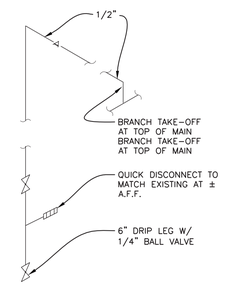

COMPRESSED AIR DROP

NOT TO SCALE

7 / P6.1

GML ARCHITECTS · LLC
architects & planners
1575 DELUCCHI LN · SUITE 120
RENO · NEVADA 89502
P · 775 · 829 · 8814
F · 775 · 829 · 8828

REGISTERED PROFESSIONAL ENGINEER, STATE OF NEVADA, STEVEN H. AINSWORTH, Exp. 12-31-14, MECHANICAL, No. 8139

6.4.14

CARSON CITY FLEET MAINTENANCE FACILITY EXPANSION

CARSON CITY, NEVADA

DATE	6-2-14
JOB NO	796
DRAWN	JSH/ER
CHECKED	SA

⚠1 BUILDING DEPARTMENT COMMENTS 4/24/14

PLUMBING DETAILS

P6.1

AINSWORTH ASSOCIATES
MECHANICAL ENGINEERS
3741 BUSINESS DR.
SACRAMENTO, CA 95820
TEL: 916-737-6014
FAX: 916-737-6015
1420 HOLCOMB AVE., SUITE 201
RENO, NV 89502
TEL: 775-329-9100
FAX: 775-329-9105
www.aa-me.com

JOB: 2013-056

FIRE ALARM MASTER LEGEND & GENERAL NOTES

	FIRE ALARM CONTROL PANEL (FACP) OR REMOTE ANNUNCIATOR PANEL (FAAP); FLUSH MOUNTED, 60" TO CL OF LCD DISPLAY
	FIRE ALARM CONTROL PANEL (FACP) / REMOTE ANNUNCIATOR PANEL (FAAP) / VOICE EVAC PANEL (FAVP); SURFACE MOUNTED, 60" TO CL OF LCD DISPLAY.
	BOOSTER POWER SUPPLY (BPS); SURFACE MOUNTED
F	MANUAL PULL STATION; MOUNT AT 48" TO CENTER LINE UNO
P, P	SMOKE DETECTOR; (P) PHOTOELECTRIC, (I) IONIZATION, (M) MULTI TECHNOLOGY, (H) HORN (LO) LOCAL-ONLY 120V W/INTEGRAL BATTERY; CEILING MOUNT / WALL MOUNT
H LO, H LO	LOCAL-ONLY SMOKE DETECTOR; 120V, INTEGRAL BATTERY, WITH HORN & STROBE, CEILING MOUNT OR WALL MOUNT AT 12" BELOW CEILING.
BT, BR	BEAM DETECTOR; (BT) TRANSMITTER, (BR) RECEIVER WALL MOUNT PER MANUFACTURERS SPECIFICATIONS
I, I	HEAT DETECTOR; (ROR) RATE OF RISE, (F) FIXED, TEMP 135° OR 190° CEILING MOUNT / WALL MOUNT
MM	MONITOR MODULE; AT OR NEAR DEVICE
CR	CONTROL RELAY MODULE; AT OR NEAR DEVICE
IM	ISOLATOR MODULE; AT OR NEAR DEVICE
PM	MULTI-VOLTAGE RELAY; AT OR NEAR DEVICE
SM	SINGLE INPUT MODULE; AT OR NEAR DEVICE
DM	DUAL INPUT MODULE; AT OR NEAR DEVICE
DH	MAGNETIC DOOR HOLDER; SYSTEM POWERED AND CONTROLLED UNO, MOUNTING PER PLANS
T/H	FIREMAN'S PHONE; MOUNTED AT +48" TO TOP UNO, JACK OR HANDSET
—EOLR	END OF LINE RESISTOR
FIV	FIV VALVE
	HORN; WALL MOUNT 90" AFF TO TOP OF DEVICE AND NOT LESS THAN 6" BELOW CEILING
	HORN; CEILING MOUNT
cd	HORN/STROBE; WALL MOUNT 80" AFF TO BOTTOM OF LENS NOTE CANDELA
cd	HORN/STROBE; CEILING MOUNT NOTE CANDELA
W	SPEAKER; WALL MOUNT 90" AFF TO TOP OF DEVICE AND NOT LESS THAN 6" BELOW CEILING
S W	SPEAKER; CEILING MOUNT
cd W	SPEAKER/STROBE; WALL MOUNT 80" AFF TO BOTTOM OF LENS NOTE CANDELA
SS cd W	SPEAKER/STROBE; CEILING MOUNT NOTE CANDELA
15cd	STROBE; WALL MOUNT 80" AFF TO BOTTOM OF LENS NOTE CANDELA
cd	STROBE; CEILING MOUNT NOTE CANDELA
F	FIRE BELL; MOUNTED PER LOCAL CODE
J	FIRE ALARM JUNCTION BOX, W/RED COVER & FA CKT LABEL
KH	HOOD FIRE SUPPRESSION SYSTEM CONNECTION
AL	REMOTE ALARM LAMP
FS	FIRE SPRINKLER FLOW SWITCH
TS	FIRE SPRINKLER TAMPER SWITCH
FSD	FIRE/SMOKE DAMPER; COORDINATE INSTALLATION AND MOTOR DE-ENERGIZE PROCEDURES WITH MECHANICAL CONTRACTOR. ELECTRICAL CONTRACTOR SHALL PROVIDE RACEWAY, POWER, AND CONTROL WIRE AS NECESSARY.
D	DUCT SMOKE DETECTOR; 1 EA AT SUPPLY (2000 CFM) 1 EA RETURN & SUPPLY (15,000 CFM)

NOTES:

1. THE CONTRACTOR SHALL SERVE AS THE CITY/STATE LICENSED DESIGNER AND INSTALLER FOR THE FIRE ALARM SYSTEM. A COMPLETE TURN-KEY SYSTEM SHALL BE DESIGNED, FURNISHED, AND INSTALLED BY THE CONTRACTOR INCLUDING, BUT NOT LIMITED TO THE CONTROL PANEL, DEVICES, MODULES, EQUIPMENT ETC. REQUIRED FOR A COMPLETE SYSTEM. INSTALL AN APPROVED MANUAL, AUTOMATIC, OR MANUAL AND AUTOMATIC FIRE ALARM SYSTEM IN ACCORDANCE WITH THE PROVISIONS OF THE IFC, IBC, NFPA-70, NFPA-72, NFPA-101, NEC 760, ADA AND LOCAL AHJ REQUIREMENTS.
2. THE CONTRACTOR'S DESIGN AND BID SHALL BE BASED ON ALL PROJECT DRAWINGS AND SPECIFICATIONS FOR ALL DISCIPLINES, INCLUDING BUT NOT LIMITED TO MECHANICAL, FIRE SPRINKLER, KITCHEN, ARCHITECTURAL, SECURITY, BUILDING AUTOMATION, AND STRUCTURAL SYSTEMS. FIRE ALARM DEVICES AS SHOWN ON PLANS ARE SHOWN DIAGRAMMATICALLY FOR BIDDING PURPOSES ONLY AND IS INDICATED ON THE DRAWINGS AND IN THE SPECIFICATIONS AS MINIMUM CRITERIA. THE CONTRACTOR SHALL COORDINATE WITH THE LOCAL AHJ AND COMPLY WITH APPLICABLE CODES FOR ANY ADDITIONAL DEVICES OR EQUIPMENT THAT MAY BE REQUIRED.
3. INSTALLATION OF THE FIRE ALARM SYSTEM SHALL NOT BE STARTED UNTIL DETAILED PLANS AND SPECIFICATIONS HAVE BEEN APPROVED BY THE LOCAL AHJ AND THE ENGINEER OF RECORD.
4. FIRE ALARM SYSTEM SHALL BE CLASS 1 CIRCUITING AS REQUIRED BY LOCAL AHJ AND NFPA-70.
5. ALL FIRE ALARM WIRING TO BE RUN IN 3/4" CONDUIT. ALL FIRE ALARM CONDUIT SHALL BE MANUFACTURED RED CONDUIT. (CONDUIT SHALL NOT BE SPRAY PAINTED).
6. BATTERY BACKUP SYSTEM SHALL BE CALCULATED TO PROVIDE A MINIMUM OF 24 HOURS OF STANDBY AND A MINIMUM OF 5 MINUTES OF ALARM OR PER AHJ REQUIREMENTS.
7. CONNECT TO THE TELEPHONE SYSTEM WITH DIAL OUT BY POINT (CITY OF RENO JURISDICTION ONLY). IF A SYSTEM IS SELECTED THAT DOES NOT HAVE DIAL OUT BY POINT, THEN THE SUB-CONTRACTOR SHALL PROVIDE A REMOTE ANNUNCIATOR AT ENTRANCE DESIGNATED BY LOCAL AHJ.
8. FIRE ALARM NOTIFICATION APPLIANCE CANDELA VALUE SHALL MEET THE REQUIREMENTS OF NFPA 72, BASED ON ROOM SIZE. IT IS THE CONTRACTORS RESPONSIBILITY TO ADD ADDITIONAL NOTIFICATION APPLIANCES AS REQUIRED TO COMPLY WITH THE REQUIREMENTS OF NFPA 72.
9. MANUAL PULL STATIONS SHALL BE MOUNTED 48" TO CENTER OF DEVICE.
10. DETECTORS ARE NOT TO BE LOCATED IN A DIRECT AIRFLOW OR CLOSER THAN 3' FROM AN AIR SUPPLY DIFFUSER OR RETURN AIR OPENING IN ACCORDANCE WITH NFPA-72 A.17.7.4.1, (2010).
11. DETECTOR LOCATION FOR DOOR HOLD ACTIVATION SHALL BE PER NFPA-72, 17.7.5.6.6.1, (1-3), (2010), WHEN REQUIRED.
12. AREA SMOKE DETECTION AND DUCT DETECTORS SHALL SHUT DOWN ALL MECHANICAL UNITS.
13. UPON COMPLETION OF THE INSTALLATION OF THE FIRE ALARM SYSTEM, A FINAL INSPECTION AND TEST OF THE ENTIRE SYSTEM SHALL BE MADE IN THE PRESENCE OF THE LOCAL AHJ. A COPY OF THE RECORD OF COMPLETION AND CERTIFICATE OF OCCUPANCY SHALL BE SUBMITTED TO THE ENGINEER OF RECORD.

ONELINE DIAGRAM NOTES

1. ONELINE DIAGRAM IS FOR REFERENCE ONLY. CONTRACTOR SHALL PROVIDE A ONELINE DIAGRAM THAT SHOWS ALL DEVICES, NEW AND EXISTING, AS THEY ARE CONNECTED ON THE FLOOR PLAN.

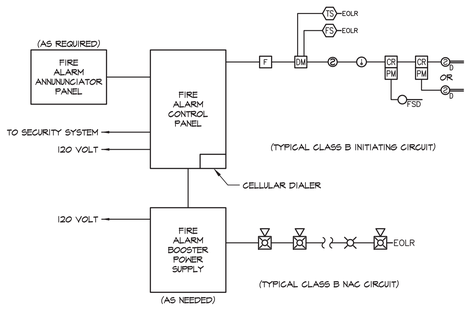

A / E0.1 FIRE ALARM SYSTEM ONELINE DIAGRAM

SCALE: NONE

DRAWING SCHEDULE

SHEET	DESCRIPTION	BUILDING DEPT. SUBMITTAL JUNE 2, 2014
E0.1	ELECTRICAL LEGEND, FIRE ALARM LEGEND, DETAIL & DRAWING SCHEDULE	●
E0.2	ONELINE DIAGRAMS	●
E0.3	PANEL SCHEDULES & LOAD CALCULATIONS	●
E0.4	FIXTURE SCHEDULE & IECC CALCULATIONS	●
E0.5	DETAILS	●
E0.6	DETAILS	●
E1.1	ELECTRICAL DEMOLITION SITE PLAN	●
E1.2	ELECTRICAL SITE PLAN	●
E2.1	DEMOLITION LIGHTING PLANS	●
E2.2	DEMOLITION POWER & SIGNAL PLANS	●
E3.1	LIGHTING PLANS	●
E3.2	POWER PLANS	●
E4.1	SIGNAL PLANS	●
	TOTAL SHEETS IN ISSUE:	13

ELECTRICAL LEGEND

AUGUST 2011

- PANELBOARD; SURFACE MOUNTED
- PANELBOARD; FLUSH MOUNTED
- SWITCHBOARD OR DISTRIBUTION PANEL
- XF TRANSFORMER
- PULLBOX / VAULT
- MOTOR STARTER
- COMBINATION MOTOR STARTER
- COMBINATION MOTOR STARTER PROVIDED BY OTHERS
- F DISCONNECT SWITCH - FUSIBLE (FUSED PER EQUIP. NAMEPLATE)
- N DISCONNECT SWITCH - NON-FUSIBLE
- DISCONNECT SWITCH PROVIDED BY OTHERS
- VARIABLE FREQUENCY DRIVE
- VARIABLE FREQUENCY DRIVE PROVIDED BY OTHERS
- CB ENCLOSED CIRCUIT BREAKER
- GROUND ROD
- SHUNT TRIP STATION OR EMERGENCY PUSHBUTTON
- M REMOTE METER
- a b LIGHTING FIXTURE - LOWERCASE LETTER DENOTES SWITCHING (a = CENTER LAMP, b = OUTER LAMPS)
- WALL MOUNTED FIXTURE
- RECESSED DOWNLIGHT
- SURFACE LUMINAIRE
- POLE MOUNTED LIGHT (# OF HEADS INDICATED ON DRAWING)
- FLUORESCENT STRIP FIXTURE
- BOLLARD
- RECESSED DOWNLIGHT (WALL WASH)
- TRACK LIGHTING
- EMERGENCY LIGHTING UNIT
- EXIT SIGN FIXTURE - SHADED AREA DENOTES LIGHTED FACE - ARROWS DENOTE DIRECTION
- EMERGENCY FIXTURE
- SINGLE RECEPTACLE; 20A, 125V, NEMA 5-20, +18" AFF (UNO)
- DUPLEX RECEPTACLE; 20A, 125V, NEMA 5-20, +18" AFF (UNO)
- DUPLEX RECEPTACLE; HALF SWITCHED
- DUPLEX RECEPTACLE; FLOOR MOUNTED
- QUAD RECEPTACLE; 20A, 125V, NEMA 5-20, +18" AFF (UNO)
- QUAD RECEPTACLE; FLOOR MOUNTED
- ISOLATED GROUND TYPE RECEPTACLE (ORANGE TRIANGLE) - 20A, 125V, NEMA 5-20IG, +18" AFF (UNO)
- DUPLEX RECEPTACLE GFI TYPE - 20A, 125V, NEMA 5-20 GFI +18" AFF (UNO)
- DUPLEX RECEPTACLE; ABOVE COUNTER (VERIFY HEIGHT)
- SPECIAL PURPOSE RECEPT.; SEE DWGS FOR NEMA CONFIG.
- DUPLEX RECEPTACLE; CEILING MOUNTED
- MULTI-OUTLET ASSEMBLY; SPACING PER DWGS
- DATA / VOICE OUTLET; 18" AFF (UNO) - 1 VOICE, 1 DATA JACK, 2 BLANKS
- DATA / VOICE OUTLET; FLOOR MOUNTED
- DATA / VOICE OUTLET; ABOVE COUNTER (VERIFY HEIGHT)
- MULTI-OUTLET ASSEMBLY; SPACING PER DWGS
- TELEPHONE OUTLET; 18" AFF (UNO)
- DATA OUTLET; 18" AFF (UNO)
- S SPEAKER
- TV TELEVISION OUTLET; 18" AFF (UNO)
- TELEPHONE TERMINAL BOARD (TTB)
- VC VOLUME CONTROL
- GROUNDING BAR
- S SINGLE POLE SWITCH 48" AFF (UNO)
- $_3$ THREE WAY SWITCH 48" AFF (UNO)
- $_4$ FOUR WAY SWITCH 48" AFF (UNO)
- $_K$ KEY OPERATED SWITCH 48" AFF (UNO)
- $_L$ SWITCH WITH LIGHTED HANDLE
- $_M$ MANUAL MOTOR STARTER
- $_P$ SWITCH WITH PILOT LIGHT 48" AFF (UNO)
- $_T$ TIME WALL SWITCH 48" AFF (UNO)
- D DIMMER OPERATED SWITCH 48" AFF (UNO)
- OCCUPANCY SENSOR - WALL MOUNTED 48" AFF (UNO)
- OS = 360°; OS = 180°; OS = 90° — OCCUPANCY SENSOR - CEILING MOUNTED. ARROWS INDICATE COVERAGE, DIRECTION & PATTERN. PROVIDE WITH POWER PACK PER MFG REQUIREMENTS.
- CONTROL STATION
- CONTACTOR OR RELAY
- PC PHOTOELECTRIC CELL (ON ROOF FACING NORTH UNO)
- TC TIMECLOCK
- GFI GROUND FAULT INTERRUPTER DEVICE
- M METERING DEVICE
- REMOTE METER
- ST SHUNT TRIP DEVICE
- TRANSFORMER
- CURRENT TRANSFORMER
- G GENERATOR
- # MOTOR - # INDICATES HP
- INTERRUPTER SWITCH
- GFI GROUND FAULT RELAY W/ CT OR SENSOR
- FUSE
- CIRCUIT BREAKER
- DRAWOUT CIRCUIT BREAKER
- A/S TRANSFER SWITCH (A=AUTOMATIC, M=MANUAL) # FOR POLES 2, 3 OR 4
- SPD SURGE PROTECTION DEVICE
- T THERMOSTAT (PROVIDED BY MECH. CONTRACTOR UNO)
- J JUNCTION BOX (SIZE AS REQUIRED UNO)
- 3 SHEET NOTE DESIGNATION
- F1 FIXTURE DESIGNATION; F1=TYPE (SEE FIXTURE SCH.)
- 5 REVISION DELTA; NUMBER REPRESENTS REVISION
- 1253 FEEDER DESIGNATION
- AHU 2 EQUIPMENT CONNECTION
- CONDUIT/RACEWAY IN WALL OR ABOVE CEILING
- CONDUIT/RACEWAY BELOW GRADE OR BELOW FLOOR
- CONDUIT/RACEWAY UP
- CONDUIT/RACEWAY DOWN
- BREAK OR RUN CONTINUES
- —OH— OVERHEAD SERVICE
- — P — PRIMARY
- — S — SECONDARY
- — C — COMMUNICATIONS OR SIGNAL
- — T — TELEPHONE
- —TV— TELEVISION
- — · — LOW VOLTAGE AND/OR CONTROL WIRING
- -✱-✱- EMERGENCY CIRCUIT
- CONDUIT/RACEWAY STUB OUT; MARK AND CAP (SITE)
- CONDUIT/RACEWAY SLEEVE
- TICS = NO. OF #12 WIRES (UNO) IF MORE THAN TWO WITHIN RACEWAY. GROUNDING CONDUCTOR (NOT SHOWN) ALWAYS REQUIRED.
  - ISOLATED GROUNDING CONDUCTOR
  - NEUTRAL CONDUCTOR
  - PHASE CONDUCTOR(S)
- BRANCH CIRCUIT (WHEN TIC MARKS ARE NOT SHOWN) = (1) PHASE, (1) NEUTRAL AND (1) GROUNDING CONDUCTOR
- HOMERUN TO PANELBOARD OR DEVICE
- HA-(1,3,5,3N)G HOMERUN CIRCUIT DESIGNATION
  - GROUNDING CONDUCTOR
  - NEUTRAL CONDUCTOR (N=1, 2N=2 NEUTRALS, 3N=3 NEUTRALS)
  - PHASE CONDUCTOR(S)
  - PANELBOARD DESIGNATION
- HA-(1,3,5)G HOMERUN CIRCUIT DESIGNATION (3 PHASE CIRCUIT SHOWN)
  - GROUNDING CONDUCTOR
  - PHASE CONDUCTOR(S)
  - PANELBOARD DESIGNATION
- NORMALLY OPEN (NO) CONTACT
- NORMALLY CLOSED (NC) CONTACT
- C COIL - VOLTAGE PER CONTROL DIAGRAMS
- PILOT LIGHT (LED) PUSH-TO-TEST. LETTER INDICATES COLOR (R=RED, G=GREEN, A=AMBER, Y=YELLOW)
- PILOT LIGHT (LED) NON PUSH-TO-TEST
- THERMAL OVERLOAD
- MAGNETIC OVERLOAD
- PUSH BUTTON NORMALLY OPEN (NO)
- PUSH BUTTON NORMALLY CLOSED (NC)
- H A HAND-OFF-AUTO (HOA) SELECTOR SWITCH
- LIMIT SWITCH NORMALLY OPEN (NO)
- LIMIT SWITCH NORMALLY CLOSED (NC)
- PUSH BUTTON ILLUMINATED (LED)

NOTE: THIS IS A MASTER SYMBOL LIST. IT MAY BE THAT NOT ALL SYMBOLS SHOWN ARE USED WITHIN THIS SET OF PLANS. HEIGHTS GIVEN ARE TO CENTER LINE OF DEVICE.

20	SINGLE POLE CIRCUIT BREAKER
20/2	TWO POLE CIRCUIT BREAKER
20/3	THREE POLE CIRCUIT BREAKER
20A	ARC FAULT CIRCUIT BREAKER
20C	CONTROLLABLE CIRCUIT BREAKER
20G	GFI CIRCUIT BREAKER

L = LIGHTING
R = RECEPTACLES
E = EQUIPMENT
M = MOTOR
MI = LARGEST MOTOR
K = KITCHEN EQUIP
H = ELECTRIC HEAT

A	AMPS
ADA	AMERICANS WITH DISABILITIES ACT
AFC	ABOVE FINISHED CEILING
AFCI	ARC-FAULT CIRCUIT INTERRUPTER
AFF	ABOVE FINISHED FLOOR
AFG	ABOVE FINISHED GRADE
AHJ	AUTHORITY HAVING JURISDICTION
AIC	AMP INTERRUPTING CAPACITY
AL	ALUMINUM
ATS	AUTOMATIC TRANSFER SWITCH
AWG	AMERICAN WIRE GAUGE
BC	BARE COPPER
BKR	BREAKER
C	CONDUIT/RACEWAY
CEC	CALIFORNIA ENERGY COMMISSION
CKT	CIRCUIT
CLG	CEILING
CO	CONDUIT/RACEWAY ONLY
CT	CURRENT TRANSFORMER
CU	COPPER
DB	DISTRIBUTION BOARD
DDC	DIRECT DIGITAL CONTROLLER
DPDT	DOUBLE-POLE, DOUBLE-THROW
DPST	DOUBLE-POLE, SINGLE-THROW
DWG	DRAWING
(E)	EXISTING TO REMAIN
ELEC	ELECTRICAL
EM	EMERGENCY
EMT	ELECTRICAL METALLIC TUBING
(F)	FUTURE
FLA	FULL LOAD AMPS
FMC	FLEXIBLE METAL CONDUIT (STEEL)
FFEN	FUSE PER EQUIP. NAMEPLATE
GFI	GROUND FAULT INTERRUPT
GFR	GROUND FAULT RELAY
GND	GROUND
HID	HIGH INTENSITY DISCHARGE
HOA	HAND-OFF-AUTO SWITCH
HP	HORSEPOWER
HSKP	HOUSEKEEPING
IMC	INTERMEDIATE METAL CONDUIT
J-BOX	JUNCTION BOX
K	kcmil (BOOK = 300 kcmil)
KVA	KILOVOLT AMPS
KW	KILOWATT
LTG	LIGHTING
IG	ISOLATED GROUND
MCB	MAIN CIRCUIT BREAKER
MCM	THOUSAND CIRCULAR MILS
MFG	MANUFACTURER
MLO	MAIN LUGS ONLY
MS	MOTOR STARTER
MSB	MAIN SWITCHBOARD
MTS	MANUAL TRANSFER SWITCH
NC	NORMALLY CLOSED
NEC	NATIONAL ELECTRICAL CODE
NEMA	NATIONAL ELECTRICAL MANUFACTURER'S ASSOCIATION
NIC	NOT IN CONTRACT
NL	NIGHTLIGHT
NO	NORMALLY OPEN
NTS	NOT TO SCALE
NVE	NV ENERGY
P	POLE
PH/Ø	PHASE
PV	PHOTOVOLTAIC
PNL	PANEL
PTC	PV USA TEST CONDITIONS
PWR	POWER
(R)	RELOCATED
RAC	RIGID ALUMINUM CONDUIT
RFC	RIGID FIBERGLASS CONDUIT
RSC	RIGID STEEL CONDUIT
SE	SERVICE ENTRANCE
SPD	SURGE PROTECTION DEVICE
SPDT	SINGLE-POLE, DOUBLE-THROW
SPST	SINGLE-POLE, SINGLE-THROW
STC	STANDARD TEST CONDITIONS
SW	SWITCH
TEL	TELECOM
TTB	TELEPHONE TERMINATION BOARD
TYP	TYPICAL
UL	UNDERWRITER'S LABORATORY
UNO	UNLESS NOTED OTHERWISE
UNSW	UNSWITCHED
UPS	UNINTERRUPTED POWER SUPPLY
V	VOLTS
VA	VOLT AMPS
VFD	VARIABLE FREQUENCY DRIVE
W	WATTS
WP	WEATHER PROOF
(X)	EXISTING TO BE REMOVED
XFMR OR XF	TRANSFORMER

© 2008-2011 PK ELECTRICAL, INC.

GML ARCHITECTS · LLC
architects & planners
1575 DELUCCHI LN · SUITE 120
RENO · NEVADA 89502
P · 775 · 829 · 8814
F · 775 · 829 · 8828

STATE OF NEVADA · JOSEPH GONSER · No. 12801 · EXP. 06/30/15 · ELECTRICAL ENGINEER
6-2-14

CARSON CITY FLEET MAINTENANCE FACILITY EXPANSION

CARSON CITY, NEVADA

DATE	6-2-14
JOB NO	796
DRAWN	JVA
CHECKED	JEG

1 BUILDING DEPARTMENT COMMENTS 4/24/14

ELECT LEGEND, FA LEGEND, DETAIL + DWG SCHEDULE

E0.1

PK Electrical, Inc.
Engineering · Design · Consulting
681 Sierra Rose Dr., Ste. B | Reno, Nevada 89511 | 775.826.9010
4600 South Syracuse, 9th Floor | Denver, Colorado 80237 | 303.256.6598
pkelectrical.com © 2008-2011 PK Electrical, Inc. 13117

FEEDER SCHEDULE (600V, 3Ø, 3W)				
FEEDER	AMPERE	WIRE (CU)	BOND (CU)	CONDUIT
153	15	(3) 12	12	3/4"
203	20	(3) 12	12	3/4"
303	30	(3) 10	10	3/4"
403	40	(3) 8	10	3/4"
503	50	(3) 6	10	1"
603	60	(3) 4	10	1"
703	70	(3) 4	8	1 1/4"
803	80	(3) 3	8	1 1/4"
1003	100	(3) 2	8	1 1/4"
1253	125	(3) 1/0	6	1 1/2"
1503	150	(3) 1/0	6	1 1/2"
1753	175	(3) 2/0	6	2"
2003	200	(3) 3/0	6	2"
2253	225	(3) 4/0	4	2 1/2"
2503	250	(3) 250K	4	2 1/2"
3003	300	(3) 350K	3	3"
3503	350	(3) 400K	3	3"
4003	400	(3) 500K	3	4"
5003	500	(6) 250K	(2) 2	(2) 2 1/2"
6003	600	(6) 350K	(2) 1	(2) 3"
8003	800	(6) 500K	(2) 1/0	(2) 4"
10003	1000	(9) 400K	(3) 2/0	(3) 3"
12003	1200	(9) 600K	(3) 3/0	(3) 4"
16003	1600	(12) 600K	(4) 4/0	(4) 4"
20003	2000	(15) 600K	(5) 250K	(5) 4"

FEEDER SCHEDULE (600V, 3Ø, 4W)				
FEEDER	AMPERE	WIRE (CU)	BOND (CU)	CONDUIT
154	15	(4) 12	12	3/4"
204	20	(4) 12	12	3/4"
304	30	(4) 10	10	3/4"
404	40	(4) 8	10	1"
504	50	(4) 6	10	1"
604	60	(4) 4	10	1 1/4"
704	70	(4) 4	8	1 1/4"
804	80	(4) 3	8	1 1/4"
1004	100	(4) 2	8	1 1/2"
1254	125	(4) 1/0	6	2"
1504	150	(4) 1/0	6	2"
1754	175	(4) 2/0	6	2"
2004	200	(4) 3/0	6	2"
2254	225	(4) 4/0	4	2 1/2"
2504	250	(4) 250K	4	3"
3004	300	(4) 350K	3	3"
3504	350	(4) 400K	3	3"
4004	400	(4) 500K	3	4"
5004	500	(8) 250K	(2) 2	(2) 2 1/2"
6004	600	(8) 350K	(2) 1	(2) 3"
8004	800	(8) 500K	(2) 1/0	(2) 4"
10004	1000	(12) 400K	(3) 2/0	(3) 3 1/2"
12004	1200	(12) 600K	(3) 3/0	(3) 4"
16004	1600	(16) 600K	(4) 4/0	(4) 4"
20004	2000	(20) 600K	(5) 250K	(5) 4"

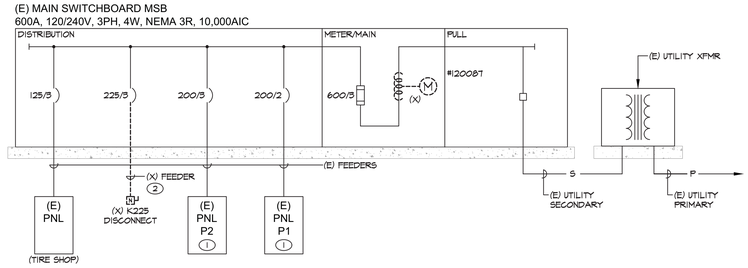

A
E0.2

ONELINE DIAGRAM - BASE BID DEMOLITION

SCALE: NONE

GENERAL NOTES (DEMO)

1. (X) AND/OR DASHED LINES INDICATE EXISTING EQUIPMENT TO BE REMOVED, (E) AND/OR SOLID LINES INDICATE EXISTING EQUIPMENT TO REMAIN UNLESS NOTED OTHERWISE.

SHEET NOTES (DEMO)

1. EXISTING PANELBOARD TO REMAIN. REFER TO PANEL SCHEDULE FOR BRANCH BREAKER AND CIRCUITING MODIFICATIONS. PROTECT EXISTING CONDUITS AND CONDUCTORS FOR RE-USE.
2. CONDUIT AND WIRE TO BE REMOVED FROM UTILITY PULL SECTION. PROVIDE RAINTIGHT KO SEALS FOR OPENINGS REMAINING AFTER DEMOLITION.

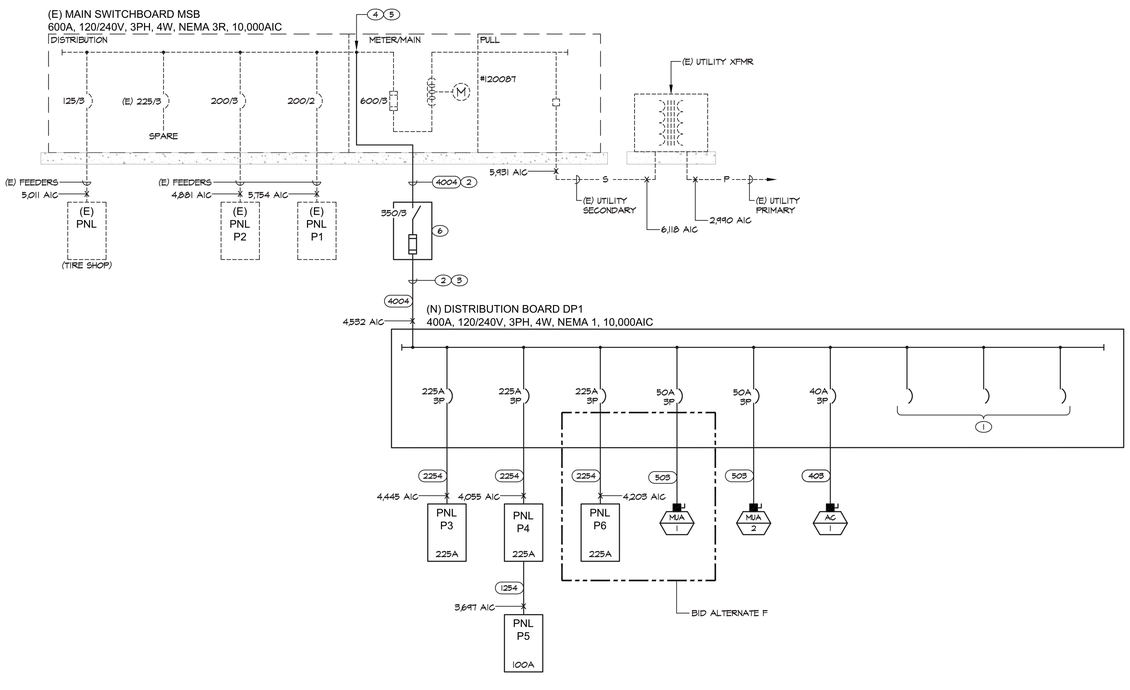

A
E0.2

ONELINE DIAGRAM - BASE BID NEW WORK

SCALE: NONE

GENERAL NOTES (NEW)

1. (E) AND/OR DASHED LINES INDICATE EXISTING EQUIPMENT, (N) AND/OR SOLID LINES INDICATE NEW EQUIPMENT UNLESS NOTED OTHERWISE.
2. PANELBOARD AND BREAKER INTERRUPTING CAPACITIES (AIC) SHALL BE FULLY RATED AS AN ASSEMBLY. SERIES RATING OF BREAKER DEVICES AND EQUIPMENT IS NOT PERMITTED.
3. ALL CONDUCTOR SIZES ARE BASED ON COPPER. ALUMINUM IS NOT PERMITTED.
4. ALL SWITCHBOARDS AND DISTRIBUTION BOARDS SHALL BE FULLY BUSSED.
5. ALL CONTRACTOR PROVIDED EQUIPMENT SHALL COMPLY WITH NV ENERGY SPECIFICATIONS AND REQUIREMENTS.
6. DO NOT SPLICE FEEDER CONDUCTORS UNLESS PRIOR APPROVAL HAS BEEN OBTAINED FROM THE ENGINEER.
7. ALL OVERCURRENT PROTECTION DEVICES AND ELECTRICAL DISTRIBUTION EQUIPMENT SHALL BE FULLY (100%) RATED FOR AVAILABLE FAULT CURRENT INDICATED. SERIES RATED DEVICES AND EQUIPMENT ARE NOT ACCEPTABLE.

SHEET NOTES (NEW)

1. REMAINDER OF SECTION SHALL BE BUSSED SPACE TO PROVIDE MINIMUM OF 20% SPARE CAPACITY.
2. FEEDER SIZED FOR FUTURE SERVICE UPGRADE.
3. ROUTE FEEDER CONDUIT THROUGH EXISTING PORTION OF BUILDING ABOVE SOUTH OVERHEAD DOORS.
4. CONTRACTOR SHALL COMPLY WITH NEC SECTION 240 - FEEDER TAP.
5. CONTRACTOR SHALL TAP BUS ON LOAD SIDE OF MAIN FUSED SWITCH. THE SOLID BUS BARS SHALL BE DRILLED WITH NEW THREADED HOLES FOR TAPS. BOLTING THROUGH HOLE IS NOT ALLOWED. SEE DETAIL 6/E0.6 FOR ADDITIONAL INFORMATION AND REQUIREMENTS. CONTRACTOR SHALL BE RESPONSIBLE FOR ALL 3RD PARTY TESTING AND APPROVAL OF MODIFICATIONS MADE TO EXISTING EQUIPMENT AND BUSSING.
6. PROVIDE 240V, 3P, 400A, NEMA 3R FUSED DISCONNECT SWITCH FUSE PER ONELINE DIAGRAM. REFER TO SHEET E3.2, ELECTRICAL POWER PLANS, FOR LOCATION.

GML ARCHITECTS · LLC
architects & planners
1575 DELUCCHI LN · SUITE 120
RENO · NEVADA 89502
P · 775 · 829 · 8814
F · 775 · 829 · 8828

STATE OF NEVADA
JOSEPH E. CANSECO
EXP. 06/30/15
ELECTRICAL
No. 12011
6-2-14

CARSON CITY FLEET MAINTENANCE FACILITY EXPANSION

CARSON CITY, NEVADA

DATE	6-2-14
JOB NO	796
DRAWN	JVA
CHECKED	JEG

⚠ BUILDING DEPARTMENT COMMENTS 4/24/14

ONELINE DIAGRAMS

E0.2

PK Electrical, Inc.
Engineering · Design · Consulting
681 Sierra Rose Dr., Ste. B | Reno, Nevada 89511 | 775.826.9010
4600 South Syracuse, 9th Floor | Denver, Colorado 80237 | 303.256.6598
pkelectrical.com

© 2008-2013 PK Electrical, Inc.
13117

4-Jun-14 PANEL: **(E) P1** LOCATION: **(E) REPAIR SHOP**

TYPE	DESCRIPTION	LOAD	BKR	CIR	A	B	C	CIR	BKR	LOAD	DESCRIPTION	TYPE
E	HEATER	900	20/2	1	3060			2	30	2160	SMALL DRILL	M
E	X	900	X	3		3060		4	30	2160	RECEPTACLES	R
E	AIR CONDITIONER	900	20/2	5	3060			6	30	2160	RECEPTACLES	R
E	X	900	X	7		3300		8	30	2400	CENTER O.H. DOORS	M
	SPARE		20	9	1800			10	30/2	1800	220 RECP.WEST.WALL	R
	SPARE		20	11		1800		12	X	1800	X	R
R	**MAINT RECEPT, DUCTSMK**	**400**	20	13	2200			14	30/2	1800	220 RECP.NORTH.WALL	R
L	LIGHTS	840	20	15		2640		16	X	1800	X	R
M	WEST O.H. DOOR	1200	20	17	3000			18	30/2	1800	BRAKE LATHE	E
M	EAST O.H. DOOR	1200	20	19		3000		20	X	1800	X	E
R	RECPT. N & W.	900	20	21	2700			22	20/2	1800	220 RECEPT.EAST WALL	R
E	EXISTING	900	20	23		2700		24	X	1800	X	R
	SPARE		20/2	25	2000			26	30	**2000**	**LIGHTS SO. REAR**	**L**
M	**X**		X	27		2000		28	30	**2000**	**LIGHTS NORTH MIDDLE**	**L**
E	**SPARE**		20	29	700			30	30	700	HEATER CENTER NORTH	E
E	**X**		20	31		700		32	20	**700**	**WEF-1 (1/4HP)**	**M**
	SPARE		20	33	700			34	20	700	HEATER SOUTHWEST	E
	SPACE			35		700		36	20	700	HEATER SOUTHEAST	E
	SPACE			37	1200			38	20	**1200**	**LIGHTS NO. ADDITION**	**L**
	SPACE			39		360		40	20	360	CORD REEL	R
					20420	20260						

COPPER BUS SIZE:	200	**GROUND:**	STANDARD	**NOTES:**	
VOLTAGE:	240	**MOUNTING:**	SURFACE		
PHASE:	1	**ENCLOSURE:**	NEMA 1		
WIRE:	3	**# OF 1-POLE CIRCUITS**	40		
LUGS:	MLO	**CONNECTED KVA:**	40.7	GE TYPE NQB	
BREAKER AIC RATING:	EXISTING	**CONNECTED AMPS:**	169.5		
NEUTRAL:	100%	**NET KVA:**	37.3		
FEEDER OCPD SIZE:	200	**NET AMPS:**	155.4		

© 2008-2011 PK ELECTRICAL, INC.

4-Jun-14 PANEL: **(E) P2** LOCATION: **(E) REPAIR SHOP**

TYPE	DESCRIPTION	LOAD	BKR	CIR	A	B	C	CIR	BKR	LOAD	DESCRIPTION	TYPE
E	LATHE	900	20/3	1	4900			2	60/3	4000	IRONHORSE	E
E	X	900	X	3		4900		4	X	4000	X	E
E	X	900	X	5			4900	6	X	4000	X	E
M	LRG. DRILL PRESS	900	20/3	7	2900			8	40/3	2000	WIRE FEED WELDER	E
M	X	900	X	9		2900		10	X	2000	X	E
M	X	900	X	11			2900	12	X	2000	X	E
E	GEN. TEST STAND	600	20/3	13	2600			14	40/3	2000	AIR COMPRESSOR	M
E	X	600	X	15		2600		16	X	2000	X	M
E	X	600	X	17			2600	18	X	2000	X	M
R	3 PH. RECPT.-S.W.DOOR	800	15/3	19	1700			20	20/3	900	TRAVELING HOIST	M
R	X	800	X	21		1700		22	X	900	X	M
R	X	800	X	23			1700	24	X	900	X	M
	SPARE		15/3	25	180			26	20	180	PLUG ON HOIST. NO.	M
	X		X	27		7000		28	100/3	7000	220 GRINDER	M
	X		X	29			7000	30	X	7000	X	M
R	RECEPT ON HOIST	180	20	31	7180			32	X	7000	X	M
	SPACE [1]			33		0		34	20		SPARE [1]	
E	EXISTING	900	20	35			1800	36	20/2	900	SINCROWAVE WELDER	E
E	ANTI FREEZE MACHINE	900	20/3	37	1800			38	X	900	X	E
E	X	900	X	39		900		40			SPACE [1]	
E	X	900	X	41			1800	42	20	900	OVERHEAD FANS	M
					21260	20000	22700					

COPPER BUS SIZE:	225	**GROUND:**	STANDARD	**NOTES:**	
VOLTAGE:	240	**MOUNTING:**	SURFACE	[1] HI-LEG NOT FOR 1-PHASE USE	
PHASE:	3	**ENCLOSURE:**	NEMA 1	[2] HI-LEG PNLS SHALL BE	
WIRE:	4	**# OF 1-POLE CIRCUITS**	42	IDENTIFIED IN ACCORDANCE WITH	
LUGS:	MLO	**CONNECTED KVA:**	64.0	NEC110-15	
BREAKER AIC RATING:	EXISTING	**CONNECTED AMPS:**	153.9	CIRCLE AW TYPE BA	
NEUTRAL:	100%	**NET KVA:**	64.0		
FEEDER OCPD SIZE:	200	**NET AMPS:**	153.9		

© 2008-2011 PK ELECTRICAL, INC.

4-Jun-14 DIST. PANEL **P3** LOCATION: **VEH. MAINT. BAY**

TYPE	DESCRIPTION	LOAD	BKR	CIR	A	B	C	CIR	BKR	LOAD	DESCRIPTION	TYPE
L	100-103	1250	20	1	2150			2	20	900	LOBBY 100	R
	SPACE [1]			3		0		4			SPACE [1]	
L	104,105	490	20	5			1390	6	20	900	LOBBY 100, STAIR 101	R
L	SHOP SWITCH B	708	20	7	1608			8	20	900	MEN 102, WMNS 103	R
	SPACE [1]			9		0		10			SPACE [1]	
L	SHOP SWITCH C	1416	20	11			1956	12	20	540	WEST SHOP	R
L	WASH BAY	1430	20	13	2150			14	20	720	SOUTH SHOP, EXTERIOR	R
	SPACE [1]			15		0		16			SPACE [1]	
L	WASH BAY	944	20	17			1664	18	20	720	SOUTH SHOP, EXTERIOR	R
L	EXTERIOR LTS	695	20	19	1235			20	20	540	WASH BAY	R
	SPACE [1]			21		0		22			SPACE [1]	
	SPARE		20	23			200	24	20	200	FACP	E
	SPARE		20	25	0			26	20		SPARE	
	SPACE [1]			27		0		28			SPACE [1]	
	SPARE		20	29			0	30	20		SPARE	
	SPARE		20	31	0			32	20		SPARE	
	SPACE [1]			33		0		34			SPACE [1]	
	SPARE		20	35			0	36	20		SPARE	
	SPACE			37	0			38			SPACE	
	SPACE [1]			39		0		40			SPACE [1]	
	SPACE			41			0	42			SPACE	
	SPACE			43	0			44			SPACE	
	SPACE [1]			45		0		46			SPACE [1]	
	MOTORIZED DOORS (1/2HP)	1100	20/2	47			1650	48	20/2	550	MOTORIZED DOORS (1/2HP)	M
	X	1100	X	49	1650			50	X	550	X	M
	SPACE [1]			51		0		52			SPACE [1]	
	SPARE		20	53			0	54	20		SPARE	
E	VEHICLE LIFT	4800	50/3	55	4800			56			SPACE	
E	X	4800	X	57		4800		58			SPACE [1]	
E	X	4800	X	59			4800	60			SPACE	
					13593	4800	11660					

COPPER BUS SIZE:	225	**GROUND:**	STANDARD	**NOTES:**	
VOLTAGE:	240	**MOUNTING:**	SURFACE		
PHASE:	3	**ENCLOSURE:**	NEMA 1	[2]HI-LEG PNLS SHALL BE	
WIRE:	4	**# OF 1-POLE CIRCUITS**	60	IDENTIFIED IAW NEC 110-15	
LUGS:	MLO	**CONNECTED KVA:**	30.1	ALL DISC. MEANS SHALL BE	
BREAKER AIC RATING:	10K	**CONNECTED AMPS:**	72.3	CAPABLE OF BEING LOCKED IN	
NEUTRAL:	100%	**NET KVA:**	27.9	OPEN POSITION PER NEC 430.102	
FEEDER OCPD SIZE:	225	**NET AMPS:**	67.0		

© 2008-2011 PK ELECTRICAL, INC.

4-Jun-14 DIST. PANEL **P4** LOCATION: **VEH. MAINT. BAY**

TYPE	DESCRIPTION	LOAD	BKR	CIR	A	B	C	CIR	BKR	LOAD	DESCRIPTION	TYPE
L	SHOP LTS-SWITCH A	1416	20	1	2136			2	20	720	STORAGE 104	R
	SPACE [1]			3		0		4			SPACE [1]	
			20	5			720	6	20	720	STORAGE 104	R
	SPARE		20	7	800			8	20	800	105,106,EXTERIOR,DCT SMK	R
	SPACE [1]			9		0		10			SPACE [1]	
	SPARE		20	11			0	12	20		SPARE	
	SPARE		20	13	720			14	20	720	NORTH SHOP, EXTERIOR	R
	SPACE [1]			15		0		16			SPACE [1]	
	SPARE		20	17			540	18	20	540	NORTH SHOP, EXTERIOR	R
	SPARE		20	19	540			20	20	540	WEST SHOP	R
	SPACE [1]			21		0		22			SPACE [1]	
	SPARE		20	23			540	24	20	540	EAST SHOP, EXTERIOR	R
	SPARE		20	25	1000			26	20	1000	EAST SHOP, EXTERIOR	R
	SPACE [1]			27		0		28			SPACE [1]	
H	FS BACKFLOW HEAT	1000	20	29			1000	30	20		SPARE	
H	BACKFLOW HEAT	1000	20	31	1360			32	20	360	CORD REEL	R
	SPACE [1]			33		0		34			SPACE [1]	
	SPARE		20	35			1100	36	20/2	1100	MOTORIZED DOORS (1/2HP)	M
E	TEMP CONTRL PNLS.	200	20	37	1300			38	X	1100	X	M
	SPACE [1]			39		0		40			SPACE [1]	
H	EWH-1 (1 KW)	500	15/2	41			1050	42	20/2	550	MOTORIZED DOORS (1/2HP)	M
H	X	500	X	43	1050			44	X	550	X	M
	SPACE [1]			45		0		46			SPACE [1]	
M	EF-1 (1/8 HP), CP-1	178	20	47			2338	48	30/2	2160	POWER WASHER	M1
E	VEHICLE LIFT	4800	50/3	49	6960			50	x	2160	X	M1
E		4800	X	51		4800		52			SPACE [1]	
E		4800	X	53			5202	54	20	402	COMM. VAC (2-1.6HP)	M
E	PANEL P5	2160	125/3	55	5160			56	35/3	3000	EWH-1	H
E	X	1920	X	57		4920		58	X	3000	X	H
E	X	3080	X	59			6080	60	X	3000	X	H
					21026	9720	18570					

COPPER BUS SIZE:	225	**GROUND:**	STANDARD	**NOTES:**	
VOLTAGE:	240	**MOUNTING:**	SURFACE	[1] HI-LEG NOT FOR 1-PHASE USE	
PHASE:	3	**ENCLOSURE:**	NEMA 1	[2]HI-LEG PNLS SHALL BE	
WIRE:	4	**# OF 1-POLE CIRCUITS**	60	IDENTIFIED IAW NEC 110-15	
LUGS:	MLO	**CONNECTED KVA:**	49.3	ALL DISC. MEANS SHALL BE	
BREAKER AIC RATING:	10K	**CONNECTED AMPS:**	118.6	CAPABLE OF BEING LOCKED IN	
NEUTRAL:	100%	**NET KVA:**	50.4	OPEN POSITION PER NEC 430.102	
FEEDER OCPD SIZE:	225	**NET AMPS:**	121.2		

© 2008-2011 PK ELECTRICAL, INC.

4-Jun-14 PANEL: **P5** LOCATION: **SECOND FLOOR MDF**

TYPE	DESCRIPTION	LOAD	BKR	CIR	A	B	C	CIR	BKR	LOAD	DESCRIPTION	TYPE
	SPARE		20	1	540			2	20	540	WEST OFFICE	R
	SPACE [1]			3		0		4			SPACE [1]	
L	SECOND FLOOR	1100	20	5			1640	6	20	540	WEST OFFICE	R
	SPARE		20	7	720			8	20	720	MDF ROOM	R
	SPACE [1]			9		0		10			SPACE [1]	
	SPARE		20	11			720	12	20	720	TRAINING	R
	SPARE		20	13	900			14	20	900	TRAINING	R
	SPACE [1]			15		0		16			SPACE [1]	
	SPARE		20	17			540	18	20	540	SOUTH OFFICE	R
E	TEMP CONTRL PNLS.	200	20	19	740			20	20	540	SOUTH OFFICE	R
	SPACE [1]			21		0		22			SPACE [1]	
E	SECURITY PANEL	300	20	23			300	24	20		SPARE	
E	FRIDGE	1200	20	25	1560			26	20	360	KITCHEN COUNTER	R
	SPACE [1]			27		0		28			SPACE [1]	
E	SERVER RACK	360	20	29			720	30	20	360	KITCHEN COUNTER	R
					4460	0	3920					

COPPER BUS SIZE:	125	**GROUND:**	STANDARD	**NOTES:**	
VOLTAGE:	240	**MOUNTING:**	SURFACE	[1] HI-LEG NOT FOR 1-PHASE USE	
PHASE:	3	**ENCLOSURE:**	NEMA 1	[2] HI-LEG PNLS SHALL BE	
WIRE:	4	**# OF 1-POLE CIRCUITS**	30	IDENTIFIED IN ACCORDANCE WITH	
LUGS:	MLO	**CONNECTED KVA:**	8.4	NEC110-15	
BREAKER AIC RATING:	10K	**CONNECTED AMPS:**	20.2		
NEUTRAL:	100%	**NET KVA:**	8.4		
FEEDER OCPD SIZE:	200	**NET AMPS:**	20.2		

© 2008-2011 PK ELECTRICAL, INC.

4-Jun-14 PANEL: **P6** LOCATION: **EXISTING SHOP**

TYPE	DESCRIPTION	LOAD	BKR	CIR	A	B	C	CIR	BKR	LOAD	DESCRIPTION	TYPE
M	EF-1 (1/4 HP)	700	20	1	1240			2	20	540	EAST SHOP	R
	SPACE [1]			3		0		4			SPACE [1]	
	SPARE		20	5			540	6	20	540	EAST SHOP	R
	SPARE		20	7	0			8	20		SPARE	
	SPACE [1]			9		0		10			SPACE [1]	
	SPARE		20	11			0	12	20		SPARE	
	SPARE		20	13	0			14	20		SPARE	
	SPACE [1]			15		0		16			SPACE [1]	
	SPARE		20	17			0	18	20		SPARE	
	SPACE			19	0			20			SPACE	
	SPACE [1]			21		0		22			SPACE [1]	
	SPACE			23			0	24			SPACE	
M1	VEF-1 (1 HP)	582	15/3	25	582			26			SPACE	
M1	X	582	X	27		582		28			SPACE [1]	
M1	X	582	X	29			582	30			SPACE	
M	VEF-2 (1 HP)	582	15/3	31	1164			32	15/3	582	VEF-2 (1 HP)	M
M	X	582	X	33		1164		34	X	582	X	M
M	X	582	X	35			1164	36	X	582	X	M
M	VEF-3 (1 HP)	582	15/3	37	1164			38	15/3	582	VEF-3 (1 HP)	M
M	X	582	X	39		1164		40	X	582	X	M
M	X	582	X	41			1164	42	X	582	X	M
					4150	2910	3450					

COPPER BUS SIZE:	125	**GROUND:**	STANDARD	**NOTES:**	
VOLTAGE:	240	**MOUNTING:**	SURFACE	[1] HI-LEG NOT FOR 1-PHASE USE	
PHASE:	3	**ENCLOSURE:**	NEMA 1	[2] HI-LEG PNLS SHALL BE	
WIRE:	4	**# OF 1-POLE CIRCUITS**	30	IDENTIFIED IN ACCORDANCE WITH	
LUGS:	MLO	**CONNECTED KVA:**	10.5	NEC110-15	
BREAKER AIC RATING:	10K	**CONNECTED AMPS:**	25.3		
NEUTRAL:	100%	**NET KVA:**	10.9		
FEEDER OCPD SIZE:	125	**NET AMPS:**	26.3		

© 2008-2011 PK ELECTRICAL, INC.

BID ALTERNATE 'F'

LOAD CALCULATION: (E) Main Sevice Board 'MSB'

BOARD	PANEL	LIGHTING	RECEPTS.	EQUIP.	MOTOR	KITCHEN	HEAT	TOTAL
	METER HI-DEMAND			31,158				31,158
	REMOVED EQUIP.	-3,744	-4,140	-1,200	-4,800		-2,700	-16,584
	(E) P1	5,200	400		700			6,300
	DP-1	8,349	11,880	43,011	38,938		10,360	112,538
	Total Connected Load:	9,805	8,140	72,969	34,838		7,660	133,412
	Largest Motor:							
NEC Demand Factor		100%	100%, 1st 10KW 50% for rest	100%	100% + 25% of Largest Load	65%	100%	
NEC Code Reference		NEC 220.42	NEC 220.44		NEC 430.24	NEC 220.56	NEC 220.51	
	Total Demand Load:	9,805	8,140	72,969	34,838		7,660	133,412
	NEC Load:	133,412	at 240/120v		320.9 Amps			

© 2008-2011 PK ELECTRICAL, INC.

LOAD CALCULATION: DISTRIBUTION BOARD DP-1

BOARD	PANEL	LIGHTING	RECEPTS.	EQUIP.	MOTOR	KITCHEN	HEAT	TOTAL
	P3	6,933	5,220	29,000	1,100			42,253
	P4	1,416	5,580	7,360	3,880		10,360	28,596
	P6		1,080		9,430			10,510
	MUA-1				12,264			12,264
	MUA-2				12,264			12,264
	AC-1			6,651				6,651
	Total Connected Load:	8,349	11,880	43,011	38,938		10,360	112,538
	Largest Motor:				12,264			
NEC Demand Factor		100%	100%, 1st 10KW 50% for rest	100%	100% + 25% of Largest Load	65%	100%	
NEC Code Reference		NEC 220.42	NEC 220.44		NEC 430.24	NEC 220.56	NEC 220.51	
	Total Demand Load:	8,349	10,940	43,011	42,004		10,360	114,664
	NEC Load:	114,664	at 240/120v		275.8 Amps			

© 2008-2011 PK ELECTRICAL, INC.

MOTOR STARTER SCHEDULE

MS#	EQUIPMENT DESCRIPTION	HP	VOLTAGE	PHASE	FLA	KVA	DISC. [2] TYPE	DISC. NEMA RATING	DISC. SIZE	DISC. FUSE	DISC. CIRCUIT BREAKER	STARTER [3] TYPE	STARTER NEMA SIZE	STARTER O.L. PROT 115%	OPTIONS CONTROL PWR XFMR	OPTIONS CONTROL VOLTAGE	OPTIONS DDC	OPTIONS START / STOP	OPTIONS HOA	OPTIONS PILOT(S)	OPTIONS AUX CONTACTS	[1] SCHEMATIC CONTROL DIAGRAM
1	VEF-1	1	208	3	4.6	1.7	CNF	1	30/3		15/3	FVNR	00	6	X	120	X	X	X	X	X	H/E0.5
2	VEF-2	1	208	3	4.6	1.7	CNF	1	30/3		15/3	FVNR	00	6	X	120	X	X	X	X	X	H/E0.5
3	VEF-3	1	208	3	4.6	1.7	CNF	1	30/3		15/3	FVNR	00	6	X	120	X	X	X	X	X	H/E0.5
4	VEF-4	1	208	3	4.6	1.7	CNF	1	30/3		15/3	FVNR	00	6	X	120	X	X	X	X	X	H/E0.5
5	VEF-5	1	208	3	4.6	1.7	CNF	1	30/3		15/3	FVNR	00	6	X	120	X	X	X	X	X	H/E0.5
6	WEF-1	1/4	120	1	9.8	1.2	CNF	1	$m		15/1	FVNR	0	7.5	X	120	X	X	X	X	X	

NOTES:

[1] SEE SCHEMATIC CONTROL DIAGRAMS AND SPECIFICATIONS FOR QUANTITY & TYPES OF CONTROL DEVICES, PILOT LIGHTS, PUSHBUTTONS, AUX CONTACTS, ETC. REFER TO MECHANICAL & PLUMBING DOCUMENTS FOR ADDITIONAL INFORMATION.

[2] **CNF** = COMBINATION NON-FUSIBLE DISCONNECT SWITCH / **CF =** COMBINATION FUSIBLE DISCONNECT SWITCH / **CCB** = COMBINATION CIRCUIT BREAKER
MAG = MAGNETIC / **MAN** = MANUAL. PROVIDE ALL TYPES WITH OVERLOAD PROTECTION (O.L.).

[3] **FVNR** = FULL VOLTAGE NON-REVERSING / **FVR** = FULL VOLTAGE REVERSING / **VFD** = VARIABLE FREQUENCY DRIVE / **SFST** = SOFT START
2S1W = 2 SPEED 1 WINDING / **2S2W** = 2 SPEED 2 WINDING, **2SPW** = 2 SPEED PART WINDING,

© 2008-2011 PK ELECTRICAL, INC.

GML ARCHITECTS · LLC
architects & planners
1575 DELUCCHI LN · SUITE 120
RENO · NEVADA 89502
P · 775 · 829 · 8814
F · 775 · 829 · 8828

STATE OF NEVADA PROFESSIONAL ENGINEER JOSEPH E. CARSON No. 9801 EXP. 06/30/15 ELECTRICAL
6-2-14

CARSON CITY FLEET MAINTENANCE FACILITY EXPANSION

CARSON CITY, NEVADA

DATE	6-2-14
JOB NO	796
DRAWN	JVA
CHECKED	JEG

⚠ BUILDING DEPARTMENT COMMENTS 4/24/14

PANEL SCHEDULES + LOAD CALCULATIONS

E0.3

PK Electrical, Inc.
Engineering · Design · Consulting
681 Sierra Rose Dr., Ste. B | Reno, Nevada 89511 | 775.826.9010
4600 South Syracuse, 9th Floor | Denver, Colorado 80237 | 303.256.6598
pkelectrical.com © 2008-2011 PK Electrical, Inc. 13117

COMcheck Software Version 3.9.3
Interior Lighting Compliance Certificate

2009 IECC

Section 1: Project Information

Project Type: **New Construction**
Project Title : Carson City Fleet Maintenance Facility Expansion

Construction Site:
Butti Way
Carson City, NV 89701

Owner/Agent:
Carson City Public Works
3505 Butti Way
Carson City, NV 89701

Designer/Contractor:
Jason Aviles, PE
PK Electrical Inc.
681 Sierra Rose Dr.
Suite B
Reno, NV 89511
775-826-9010

Section 2: Interior Lighting and Power Calculation

A Area Category	B Floor Area (ft2)	C Allowed Watts / ft2	D Allowed Watts (B x C)
Existing Facility (Workshop)	6372	1.4	8921
New Facility (Workshop)	8074	1.4	11304
		Total Allowed Watts =	20224

Section 3: Interior Lighting Fixture Schedule

A Fixture ID : Description / Lamp / Wattage Per Lamp / Ballast	B Lamps/ Fixture	C # of Fixtures	D Fixture Watt.	E (C X D)
Existing Facility (Workshop 6372 sq.ft.)				
Linear Fluorescent 1: F2: 2-LAMP TURRET: 48" T8 32W (Super T8): Premium efficiency:	2	2	54	108
Linear Fluorescent 2: F9: 6-LAMP TANDEM HI-BAY: 46" T5 54W: Electronic:	6	16	354	5664
Linear Fluorescent 3: F9A: 6-LAMP TANDEM HI-BAY: 46" T5 54W: Electronic:	6	5	354	1770
New Facility (Workshop 8074 sq.ft.)				
Linear Fluorescent 7: F1/F1X: 2-LAMP VOLUMETRIC TROFFER: 48" T8 32W (Super T8): Premium efficiency:	2	18	54	972
Linear Fluorescent 1 copy 1: F2/F2X: 2-LAMP TURRET: 48" T8 32W (Super T8): Premium efficiency:	2	2	54	108
Linear Fluorescent 6: F3: 2-LAMP ASYMETRIC STRIP: 48" T8 32W (Super T8): Premium efficiency:	2	1	54	54
Linear Fluorescent 8: F4: WALL MOUNT VANITY: 48" T8 32W (Super T8): Premium efficiency:	1	6	27	162
Linear Fluorescent 8 copy 1: F4A: WALL MOUNT VANITY: 48" T8 32W (Super T8): Premium efficiency:	1	3	54	162
Linear Fluorescent 10: F5: 48" T8 32W (Super T8): Premium efficiency:	6	3	162	486
Linear Fluorescent 11: F6X: 24" T8 17W: Premium efficiency:	3	1	45	45
Compact Fluorescent 1: F7X: Twin Tube 18W: Electronic:	2	3	40	120
Linear Fluorescent 2 copy 1: F9: 6-LAMP TANDEM HI-BAY: 46" T5 54W: Electronic:	6	15	354	5310
Linear Fluorescent 12: 46" T5 54W: Electronic:	4	10	236	2360
		Total Proposed Watts =		17321

Section 4: Requirements Checklist

Interior Lighting PASSES: Design 14% better than code.

Lighting Wattage:

- ☐ 1. Total proposed watts must be less than or equal to total allowed watts.

Allowed Watts	Proposed Watts	Complies
20224	17321	YES

Controls, Switching, and Wiring:

- ☐ 2. Daylight zones under skylights more than 15 feet from the perimeter have lighting controls separate from daylight zones adjacent to vertical fenestration.
- ☐ 3. Daylight zones have individual lighting controls independent from that of the general area lighting.

  Exceptions:
  - ☐ Contiguous daylight zones spanning no more than two orientations are allowed to be controlled by a single controlling device.
  - ☐ Daylight spaces enclosed by walls or ceiling height partitions and containing two or fewer light fixtures are not required to have a separate switch for general area lighting.
- ☐ 4. Independent controls for each space (switch/occupancy sensor).

  Exceptions:
  - ☐ Areas designated as security or emergency areas that must be continuously illuminated.
  - ☐ Lighting in stairways or corridors that are elements of the means of egress.
- ☐ 5. Master switch at entry to hotel/motel guest room.
- ☐ 6. Individual dwelling units separately metered.
- ☐ 7. Medical task lighting or art/history display lighting claimed to be exempt from compliance has a control device independent of the control of the nonexempt lighting.
- ☐ 8. Each space required to have a manual control also allows for reducing the connected lighting load by at least 50 percent by either controlling all luminaires, dual switching of alternate rows of luminaires, alternate luminaires, or alternate lamps, switching the middle lamp luminaires independently of other lamps, or switching each luminaire or each lamp.

  Exceptions:
  - ☐ Only one luminaire in space.
  - ☐ An occupant-sensing device controls the area.
  - ☐ The area is a corridor, storeroom, restroom, public lobby or sleeping unit.
  - ☐ Areas that use less than 0.6 Watts/sq.ft.
- ☐ 9. Automatic lighting shutoff control in buildings larger than 5,000 sq.ft.

  Exceptions:
  - ☐ Sleeping units, patient care areas; and spaces where automatic shutoff would endanger safety or security.
- ☐ 10. Photocell/astronomical time switch on exterior lights.

  Exceptions:
  - ☐ Lighting intended for 24 hour use.
- ☐ 11. Tandem wired one-lamp and three-lamp ballasted luminaires (No single-lamp ballasts).

  Exceptions:
  - ☐ Electronic high-frequency ballasts; Luminaires on emergency circuits or with no available pair.

Section 5: Compliance Statement

Compliance Statement: The proposed lighting design represented in this document is consistent with the building plans, specifications and other calculations submitted with this permit application. The proposed lighting system has been designed to meet the 2009 IECC requirements in COMcheck Version 3.9.3 and to comply with the mandatory requirements in the Requirements Checklist.

Joseph E. Ganser, PE — 4/4/2014
Name - Title — Signature — Date

COMcheck Software Version 3.9.3
Exterior Lighting Compliance Certificate

2009 IECC

Section 1: Project Information

Project Type: **New Construction**
Project Title : Carson City Fleet Maintenance Facility Expansion
Exterior Lighting Zone: **2 (Light industrial area with limited nighttime use)**

Construction Site:
Butti Way
Carson City, NV 89701

Owner/Agent:
Carson City Public Works
3505 Butti Way
Carson City, NV 89701

Designer/Contractor:
Jason Aviles, PE
PK Electrical Inc.
681 Sierra Rose Dr.
Suite B
Reno, NV 89511
775-826-9010

Section 2: Exterior Lighting Area/Surface Power Calculation

A Exterior Area/Surface	B Quantity	C Allowed Watts / Unit	D Tradable Wattage	E Allowed Watts (B x C)	F Proposed Watts
Walkway < 10 feet wide	227 ft of walkway length	0.7	Yes	159	249
Main entry	3 ft of door width	20	Yes	60	50
Driveway	8841 ft2	0.06	Yes	530	432
			Total Tradable Watts* =	749	731
			Total Allowed Watts =	749	
			Total Allowed Supplemental Watts** =	600	

* Wattage tradeoffs are only allowed between tradable areas/surfaces.
** A supplemental allowance equal to 600 watts may be applied toward compliance of both non-tradable and tradable areas/surfaces.

Section 3: Exterior Lighting Fixture Schedule

A Fixture ID : Description / Lamp / Wattage Per Lamp / Ballast	B Lamps/ Fixture	C # of Fixtures	D Fixture Watt.	E (C X D)
Walkway < 10 feet wide (227 ft of walkway length): Tradable Wattage				
LED 3: L2: LED WALL PACK: LED Other Fixture Unit 36W:	1	3	36	108
LED 3 copy 1: L3: LED WALL PACK: LED Other Fixture Unit 46W:	1	3	47	141
Main entry (3 ft of door width): Tradable Wattage				
LED 1: F4X: INDIRECT WALL PACK: LED Other Fixture Unit 50W:	1	1	50	50
Driveway (8841 ft2): Tradable Wattage				
LED 2: L1: LED WALL PACK: LED Other Fixture Unit 46W:	1	4	36	144
LED 3 copy 1: L2: LED WALL PACK: LED Other Fixture Unit 36W:	1	8	36	288
			Total Tradable Proposed Watts =	731

Section 4: Requirements Checklist

Lighting Wattage:

- ☐ 1. Within each non-tradable area/surface, total proposed watts must be less than or equal to total allowed watts. Across all tradable areas/surfaces, total proposed watts must be less than or equal to total allowed watts.
  Compliance: Passes.

Controls, Switching, and Wiring:

- ☐ 2. All exemption claims are associated with fixtures that have a control device independent of the control of the nonexempt lighting.
- ☐ 3. Lighting not designated for dusk-to-dawn operation is controlled by either a a photosensor (with time switch), or an astronomical time switch.
- ☐ 4. Lighting designated for dusk-to-dawn operation is controlled by an astronomical time switch or photosensor.
- ☐ 5. All time switches are capable of retaining programming and the time setting during loss of power for a period of at least 10 hours.

Exterior Lighting Efficacy:

- ☐ 6. All exterior building grounds luminaires that operate at greater than 100W have minimum efficacy of 60 lumen/watt.

  Exceptions:
  - ☐ Lighting that has been claimed as exempt and is identified as such in Section 3 table above.
  - ☐ Lighting that is specifically designated as required by a health or life safety statue, ordinance, or regulation.
  - ☐ Emergency lighting that is automatically off during normal building operation.
  - ☐ Lighting that is controlled by motion sensor.

Section 5: Compliance Statement

Compliance Statement: The proposed exterior lighting design represented in this document is consistent with the building plans, specifications and other calculations submitted with this permit application. The proposed lighting system has been designed to meet the 2009 IECC requirements in COMcheck Version 3.9.3 and to comply with the mandatory requirements in the Requirements Checklist.

Joseph E. Ganser, PE — 4/4/2014
Name - Title — Signature — Date

LIGHTING FIXTURE SCHEDULE

PK ELECTRICAL, INC. @ 2007

LIGHTING FIXTURE CATALOG NUMBERS ARE SERIES TYPE ONLY. PROVIDE TRIMS, BALLASTS, MOUNTING EQUIPMENT, FITTINGS AND LAMPS AS REQUIRED BY THE SPECIFICATIONS AND PROJECT CONDITIONS FOR A COMPLETE INSTALLATION. THIS IS NOT A STANDALONE SCHEDULE AND FIXTURES MUST INCORPORATE ALL WORK INDICATED OR IMPLIED THROUGHOUT THE DRAWINGS AND SPECIFICATIONS.

LIGHTING SYSTEM FOOTCANDLE LEVELS ARE BASED ON THE UTILIZATION OF STANDARD REFLECTANCES OF 80-50-20 (CEILING-WALL-FLOOR) PER I.E.S. (ILLUMINATED ENGINEERING SOCIETY). THE ROOM SURFACES ARE USED AS AN INTEGRAL COMPONENT OF THE LIGHTING SYSTEMS. THE REFLECTANCE OF THE SURFACE PAINT COLOR, MATERIAL, AND OTHER ROOM SURFACES, DIRECTLY AFFECTS THE DELIVERY OF LIGHT TO THE WORK PLANE. A SIGNIFICANT DROP IN OVERALL LIGHTING LEVELS WILL OCCUR IF REFLECTANCES ARE LOWERED. THE ARCHITECT/OWNER SHALL NOTIFY THE ENGINEER IMMEDIATELY IF FINISHES DO NOT FALL INLINE WITH THE REFLECTANCES MENTIONED ABOVE.

SUBSTITUTION DEFINITIONS:
- (◉) OR EQUAL = EQUAL OR SUPERIOR TO SPECIFIED IN ALL RESPECTS WILL BE ALLOWED. ENGINEER'S PRE-BID APPROVAL IS NOT REQUIRED. PROPOSED EQUAL FIXTURES ARE SUBJECT TO REVIEW DURING THE STANDARD SUBMITTAL PROCESS.
- (◉) NO EQUAL = PROVIDE SPECIFIED FIXTURE. SUBSTITUTIONS ARE NOT ALLOWED.
- (◉) SUBJECT TO REVIEW = EQUAL OR SUPERIOR TO SPECIFIED IN ALL RESPECTS MAY BE ALLOWED ONLY WITH ENGINEER'S APPROVAL. ALL SUBSTITUTIONS MUST BE SUBMITTED AS REQUIRED BY SPECIFICATIONS AND ACCOMPANIED WITH POINT BY POINT LIGHTING CALCULATIONS. DETERMINATION OF EQUAL IS ENGINEER'S SOLE DISCRETION.

TYPE	SYMBOL	DESCRIPTION AND MANUFACTURER
F1 / 54		2'x4' LAY-IN TROFFER, CENTER BASKET, VOLUMETRIC LENS, (1) 2-LAMP STEP DIMMING, BALLAST CONFIGURED FOR 50% / 100% STEP DIMMING. (1) LAMP: (2) F032/XP5/841 VOLTAGE: 120 MANUFACTURER: LITHONIA 2VT8-232-ADP-120-OSBLD SUBSTITUTIONS: ◯ OR EQUAL ◉ SUBJECT TO REVIEW ◯ NO EQUAL
F1X / 54		SAME AS 'F1' EXCEPT PROVIDE #ELI4, OR EQUAL, 1400 LUMEN EMERGENCY BATTERY PACK IN ADDITION TO ELECTRONIC BALLAST. (1) (3) LAMP: (2) F032/XP5/T841OOK VOLTAGE: 120 MANUFACTURER: LITHONIA 2VT8-232-ADP-120-OSBLD-ELI4 SUBSTITUTIONS: ◯ OR EQUAL ◉ SUBJECT TO REVIEW ◯ NO EQUAL
F2 / 54		FLUORESCENT, 2-LAMP, 4' INDUSTRIAL, 10% UPLIGHT, SURFACE MOUNT, (1) 3-LAMP INSTANT START PROGRAM START ELECTRONIC BALLAST & WIREGUARD. (1) LAMP: (2) F032XP5 T8/41OOK VOLTAGE: 120 MANUFACTURER: LITHONIA AF10-232-MVOLT OSIOPS-HC36-WGAFPV SUBSTITUTIONS: ◯ OR EQUAL ◉ SUBJECT TO REVIEW ◯ NO EQUAL
F2X / 54		SAME AS 'F2' EXCEPT PROVIDE #ELI4,OR EQUAL, 1400 LUMEN EMERGENCY BATTERY PACK. (1) (3) LAMP: (2) F032XP5 T8/41OOK VOLTAGE: 120 MANUFACTURER: LITHONIA AF10-232-MVOLT OSIOPS-HC36-WGAFPV-ELI4 SUBSTITUTIONS: ◯ OR EQUAL ◉ SUBJECT TO REVIEW ◯ NO EQUAL
F3 / 54		4' COMPACT INDUSTRIAL STRIP, GLOSS WHITE ASSYMETRIC REFLECTOR, WIRE GUARD, WALL MOUNT FLUORESCENT LAMPS WITH (1) 2-LAMP INSTANT START BALLAST & WIREGUARD. WALL MOUNT AT 9'-0" AFF. (1) LAMP: (2) F032/XP5/T8/41OOK VOLTAGE: 120/277 MANUFACTURER: LITHONIA. Z-2-32-120-ZBASR48-OSIOIS-WGBBASR48 SUBSTITUTIONS: ◯ OR EQUAL ◉ SUBJECT TO REVIEW ◯ NO EQUAL
F4 / 27		1-LAMP, CORNER MOUNT FLUORESCENT FIXTURE, ACRYLIC LENS AND (1) 1-LAMP PROGRAM START BALLAST. (1) LAMP: (1) F032/XP5/841 VOLTAGE: 120 MANUFACTURER: HE WILLIAMS CL-4-1-32-F-AI9156-EBI-120 SUBSTITUTIONS: ◯ OR EQUAL ◉ SUBJECT TO REVIEW ◯ NO EQUAL
F4A / 54		SAME AS 'F4' FIXTURE EXCEPT PROVIDE 2-FLUORESCENT LAMPS AND (1) 2-LAMP PROGRAM START ELECTRONIC BALLAST. (1) LAMP: (2) F032/XP5/841 VOLTAGE: 120 MANUFACTURER: HE WILLIAMS CL-4-2-32-F-AI9156-EBI-120 SUBSTITUTIONS: ◯ OR EQUAL ◉ SUBJECT TO REVIEW ◯ NO EQUAL
F5 / 162		LINEAR FLUORESCENT, 6-LAMP, DIRECT/INDIRECT (60%/40%), DUAL CIRCUIT, WHITE REFLECTOR, ACRYLIC LENS, AIRCRAFT MOUNT, WHITE GLOSS FINISH, ELECTRONIC STEP-DIMMING BALLAST & END CAPS. MOUNTING HEIGHTS PER PLAN. (1) LAMP: (6) F032/XP5/841 (PER 12' SECTION) VOLTAGE: 120 MANUFACTURER: PEERLESS SPM4-2-32-40/60-WHR-OPD-12FT-R12-120-OSIOPS-DCT-F2/108-C032-IND SUBSTITUTIONS: ◯ OR EQUAL ◉ SUBJECT TO REVIEW ◯ NO EQUAL
F6 / 45		2'x2' LAY-IN TROFFER, VOLUMETRIC LENS, (2) 2-LAMP PROGRAM START ELECTRONIC BALLASTS. (1) LAMP: (3) F017/XP5/841 VOLTAGE: 120 MANUFACTURER: LITHONIA 2VT8-3-17-ADP-120-OSIOPS SUBSTITUTIONS: ◯ OR EQUAL ◉ SUBJECT TO REVIEW ◯ NO EQUAL
F7X / 40		RECESSED 6" DOWNLIGHT, WHITE OPEN REFLECTOR, WHITE TRIM, INSTANT START ELECTRONIC BALLAST AND LITHONIA (OR EQUAL) #ELR, 900 LUMEN EMERGENCY BATTERY PACK WITH REMOTE TEST SWITCH. (5) LAMP: (2) 18W DTT/41OOK VOLTAGE: 120 MANUFACTURER: LITHONIA LF6N-2/18-DTT-F6B31K-MVOLT-ELR SUBSTITUTIONS: ◯ OR EQUAL ◉ SUBJECT TO REVIEW ◯ NO EQUAL
F8 / 236		4-LAMP, CHAIN HUNG, WASH DOWN RATED, FIBERGLASS HOUSING, CLEAR ACRYLIC LENS, CONTINUOUS GASKET WITH (2) 2-LAMP PROGRAM START ELECTRONIC BALLASTS. (2) LAMP: (4) 54W T5HO/41OOK VOLTAGE: 120 MANUFACTURER: LITHONIA FHE-454-SD-MHKB-DL SUBSTITUTIONS: ◯ OR EQUAL ◉ SUBJECT TO REVIEW ◯ NO EQUAL
F9 / 354		SUSPENDED 8' TANDEM HIGH-BAY, SEMI-SPECULAR REFLECTOR WITH UPLIGHT & NARROW DISTRIBUTION, AIRCRAFT CABLE HUNG, AND MOUNTED TO HEIGHT AS INDICATED ON FLOOR PLAN DRAWINGS, FLUORESCENT LAMPS WITH (1) 4-LAMP AND (1) 2-LAMP PROGRAM-START ELECTRONIC BALLASTS CONFIGURED FOR DUAL ZONE PHOTOCELL CONTROLLED INBOARD/OUTBOARD SWITCHING (2-LAMP/4-LAMP). ACCESSORIES TO INCLUDE (1) WIREGUARD. (2) LAMP: (6) 54W T5HO/41OOK VOLTAGE: 120 MANUFACTURER: LITHONIA 9MS5HB-2-54T5HO-ND-120-OSIOPS-1/4-1/2-MSI-CMRB-PC-DZ-WGMS5HBZ SUBSTITUTIONS: ◯ OR EQUAL ◉ SUBJECT TO REVIEW ◯ NO EQUAL
F9A / 354		SUSPENDED 8' TANDEM HIGH-BAY, SEMI-SPECULAR REFLECTOR WITH UPLIGHT & WIDE DISTRIBUTION, AIRCRAFT CABLE HUNG, AND MOUNTED TO HEIGHT AS INDICATED ON FLOOR PLAN DRAWINGS, FLUORESCENT LAMPS WITH (1) 4-LAMP AND (1) 2-LAMP PROGRAM-START ELECTRONIC BALLASTS CONFIGURED FOR DUAL ZONE PHOTOCELL CONTROLLEDINBOARD/OUTBOARD SWITCHING (2-LAMP/4-LAMP). ACCESSORIES TO INCLUDE (1) WIREGUARD. (2) LAMP: (6) 54W T5HO/41OOK VOLTAGE: 120 MANUFACTURER: LITHONIA 9MS5HB-2-54T5HO-WD-120-OSIOPS-1/4-1/2-MSI-CMRB-PC-DZ SUBSTITUTIONS: ◯ OR EQUAL ◉ SUBJECT TO REVIEW ◯ NO EQUAL WGMS5HBZ
L1 / 36		20 LED'S PRODUCING 3,127 LUMENS, 530mA DRIVER CURRENT, TYPE II MEDIUM DISTRIBUTION, EXTERIOR SURFACE MOUNT WALL PAK, CAST ALUMINUM HINGED GASKETED HOUSING, 180° MOTION / AMBIENT LIGHT SENSOR W/ INTEGRAL PHOTOCELL AND DARK BRONZED FINISH. LAMP: LED/5000K VOLTAGE: 120 MANUFACTURER: LITHONIA DSXW1-LED-20C-530-50K-T2M-PIRH-ELCW-DDBXD SUBSTITUTIONS: ◯ OR EQUAL ◉ SUBJECT TO REVIEW ◯ NO EQUAL
L2 / 47		SAME AS 'L1' FIXTURE EXCEPT PROVIDE 4580 LUMENS & 700mA DRIVER CURRENT. LAMP: LED/5000K VOLTAGE: 120 MANUFACTURER: LITHONIA DSXW1-LED-20C-700-50K-T2M-PIRH-ELCW-DDBXD SUBSTITUTIONS: ◯ OR EQUAL ◉ SUBJECT TO REVIEW ◯ NO EQUAL
L3 / 47		SAME AS 'L1' FIXTURE EXCEPT PROVIDE 4678 LUMENS, 700mA DRIVER CURRENT AND FORWARD THROW, MEDIUM DISTRIBUTION. LAMP: LED/5000K VOLTAGE: 120 MANUFACTURER: LITHONIA DSXW1-LED-20C-700-50K-TFTM-PIRH-DDBXD SUBSTITUTIONS: ◯ OR EQUAL ◉ SUBJECT TO REVIEW ◯ NO EQUAL
L4X / 50		LED WALL PACK PRODUCING 8850 LUMENS, ONE PIECE DIE-CAST ALUMINUM HOUSING W/ HINGED SILICON SEALED DOOR, ANODIZED ALUMINUM REFLECTOR, IMPACT RESISTANT REFRACTIVE GLASS LENS, INTEGRAL PHOTOCELL & COLD WEATHER (-20°C - 25°C) 509 LUMEN EMERGENCY BATTERY PACK. (4) LAMP: LED / 5000K VOLTAGE: 120 MANUFACTURER: COPPER LIGHTING XTOR5ARL-PCI-CBP SUBSTITUTIONS: ◯ OR EQUAL ◉ SUBJECT TO REVIEW ◯ NO EQUAL
X1 / 28		COMBINATION EXIT SIGN WITH EMERGENCY LIGHTING, SINGLE FACE WHITE THERMOPLASTIC HOUSING, GREEN LETTERS WITH LEAD CALCIUM BATTERY, ADJUSTABLE MR16 LED EMERGENCY HEADS, SELF-DIAGNOSTICS, CHEVRONS AS INDICATED ON DRAWINGS, MOUNT AT 8'-0" AFF TO CENTER OF FIXTURE. LAMP: MR16/LED INCLUDED W/ FIXTURE VOLTAGE: 120 MANUFACTURER: EMERGI-LITE X-PR-1224M-IN-G-2-LI-AD SUBSTITUTIONS: ◯ OR EQUAL ◉ SUBJECT TO REVIEW ◯ NO EQUAL
X2 / 28	WP	WET LOCATIONS COMBINATION LED EXIT SIGN WITH EMERGENCY LIGHTING NEMA 4X LISTED, SINGLE FACE WHITE POLYVINYL BODY, GREEN LETTERS, SEALED VANDAL RESISTANT POLYCARBONATE FACEPLATE, STAINLESS STEEL TAMPER RESISTANT SCREWS, MAGNETICALLY OPERATED TEST SWITCH, NI-CAD BATTERY SELF DIAGNOSTICS, CHEVRONS AS INDICATED ON DRAWINGS. MOUNT AT 9'-0" AFF TO CENTER OF FIXTURE. LAMP: (2) MR16 HALOGEN IR/INCLUDED WITH FIXTURE VOLTAGE: 120 MANUFACTURER: EMERGI-LITE WXH-5VX24N-I-G-D-4X-2-MK SUBSTITUTIONS: ◯ OR EQUAL ◉ SUBJECT TO REVIEW ◯ NO EQUAL
X3 / 28		WALL MOUNT EMERGENCY LIGHTING UNIT, WHITE THERMOPLASTIC HOUSING, LEAD-CALCIUM BATTERY, ADJUSTABLE MR16 LED EMERGENCY HEADS, SELF DIAGNOSTIC, MOUNT AT 8'-0" AFF TO CENTER OF FIXTURE, PROVIDE PENDANT MOUNT OR CEILING MOUNT HARDWARE. LAMP: (2) LED MR16 INCLUDED W/ FIXTURE VOLTAGE: 120 MANUFACTURER: EMERGI-LITE 12PR4CM-2-LG-D SUBSTITUTIONS: ◯ OR EQUAL ◉ SUBJECT TO REVIEW ◯ NO EQUAL
X4 / 12		EXTERIOR WALL MOUNTED EMERGENCY EGRESS LUMINAIRE, WIDE DISTRIBUTION XENON LAMPS DARK BRONZE FINISH, WITH HIGH-TEMPERATURE NI-CADMIUM BATTERY LISTED FROM -0° TO 122F° OPERATION. LAMP: (2) 6W XENON WEDGE BULBS, INCLUDED W/ FIXTURE VOLTAGE: 120 MANUFACTURER: LITHONIA AFN DB EXT SUBSTITUTIONS: ◯ OR EQUAL ◉ SUBJECT TO REVIEW ◯ NO EQUAL

SHEET NOTES

1. PROVIDE OSRAM SYLVANIA 'XTREME' BALLAST AND LAMP SYSTEM: QUICKTRONIC PROSTART PSX (LOW BALLAST FACTOR) BALLAST(S) AND OCTRON XP5 LAMP(S) OR EQUAL UPON ENGINEER'S APPROVAL.
2. PROVIDE OSRAM SYLVANIA BALLAST AND LAMP SYSTEM: QUICKTRONIC PROSTART T5HO (NORMAL BALLAST FACTOR) AND PENTRON HO LAMP(S) OR EQUAL UPON ENGINEER'S APPROVAL.
3. REMOTE TEST SWITCH/CHARGE LIGHT SHALL BE INTEGRAL TO FIXTURE AND BE ACCESSIBLE FROM TRIM SIDE OF FIXTURE.
4. MOUNT FIXTURE AIMED UP FOR INDIRECT ILLUMINATION OF ENTRY.

GML ARCHITECTS • LLC
architects & planners
1575 DELUCCHI LN • SUITE 120
RENO • NEVADA 89502
P • 775 • 829 • 8814
F • 775 • 829 • 8828

ENGINEER STATE OF NEVADA JOSEPH E. GANSER EXP. 06/30/15 ELECTRICAL No. 12801 6/4/14

6-2-14

CARSON CITY FLEET MAINTENANCE FACILITY EXPANSION

CARSON CITY, NEVADA

DATE	6-2-14
JOB NO	796
DRAWN	JVA
CHECKED	JEG

⚠ BUILDING DEPARTMENT COMMENTS 4/24/14

FIXTURE SCHEDULE + IECC CALCULATIONS

E0.4

PK Electrical, Inc.
Engineering · Design · Consulting
681 Sierra Rose Dr., Ste. B | Reno, Nevada 89511 | 775.826.9010
4600 South Syracuse, 9th Floor | Denver, Colorado 80237 | 303.256.6598
pkelectrical.com © 2008-2011 PK Electrical, Inc. 13117

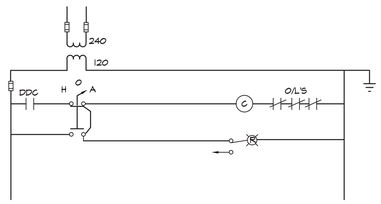

H / E0.5 TYPICAL MAGNETIC STARTER CONTROL DIAGRAM

SCALE: NONE

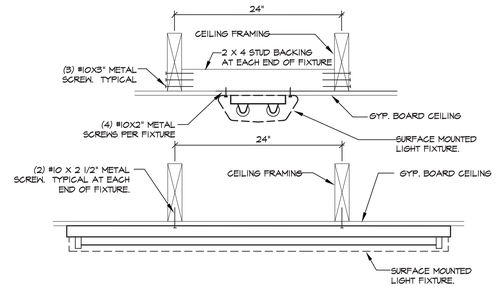

E / E0.5 SURFACE MOUNTED LIGHT FIXTURE DETAIL

SCALE: NONE

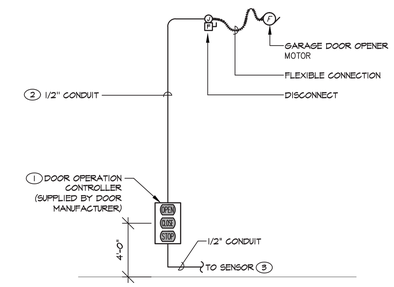

B / E0.5 OVERHEAD DOOR CONTROL DIAGRAM

SCALE: NONE

DETAIL NOTES

1. CONNECT MOTORIZED DOOR PACKAGE AND DOOR CONTROL PER MANUFACTURER'S SHOP DRAWINGS. INSTALL OPEN-STOP-CLOSE PUSH BUTTON CONTROL STATION AND INTERCONNECTING CONTROL CIRCUITING AS REQUIRED FOR A COMPLETE SYSTEM.
2. PROVIDE (1) 1/2"C W/ (8)#14AWG & #12GND FROM OVERHEAD DOOR PUSHBUTTON AND PHOTO EYE TO MOTOR. COORDINATE WITH VENDOR PRIOR TO ROUGH IN.
3. PROVIDE (1) 1/2"C W/ (2)#14AWG & #12GND FROM PUSHBUTTON CONTROL TO PHOTO EYE PER MANUFACTURER'S SHOP DRAWINGS.

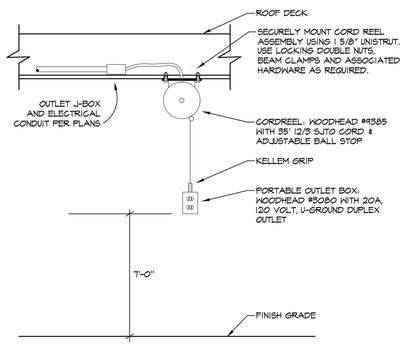

G / E0.5 DROP CORD REEL W/ RECEPTACLE

SCALE: NONE

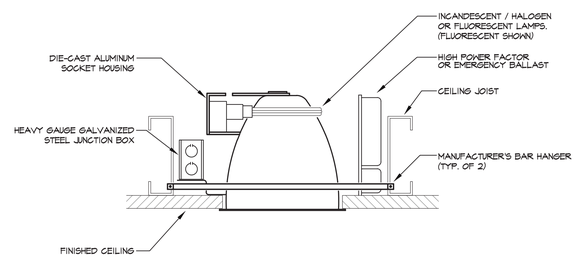

D / E0.5 DOWNLIGHT MOUNTING DETAIL

SCALE: NONE

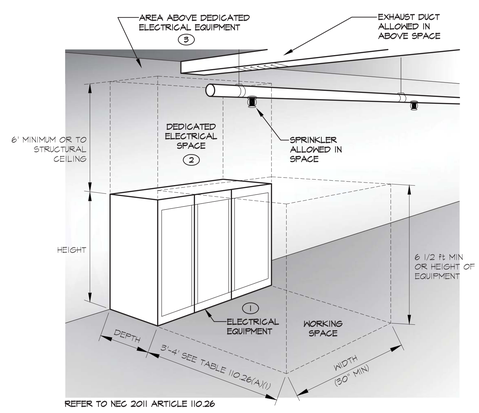

A / E0.5 NEC-ARTICLE 110.26 WORKING SPACE & DEDICATED ELECTRICAL SPACE REQUIREMENTS

SCALE: NONE

DETAIL NOTES

1. ELECTRICAL EQUIPMENT INCLUDES SWITCHGEAR, SWITCHBOARDS, DISTRIBUTION BOARDS, PANEL BOARDS, MOTOR CONTROL CENTER OR SIMILAR EQUIPMENT.
2. NO PIPING, DUCTS, LEAK PROTECTION APPARATUS, OR OTHER EQUIPMENT FOREIGN TO THE ELECTRICAL INSTALLATION SHALL BE LOCATED IN THIS ZONE.
3. THE AREA ABOVE THE DEDICATED SPACE REQUIRED BY 110.26(E)(1)(a) SHALL BE PERMITTED TO CONTAIN FOREIGN SYSTEMS, PROVIDED PROTECTION IS INSTALLED TO AVOID DAMAGE TO THE ELECTRICAL EQUIPMENT FROM CONDENSATION, LEAKS, OR BREAKS IN SUCH FOREIGN SYSTEM.

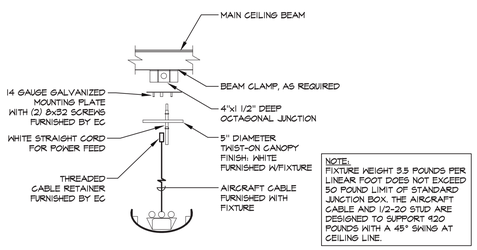

NOTE:
FIXTURE WEIGHT 3.5 POUNDS PER LINEAR FOOT DOES NOT EXCEED 50 POUND LIMIT OF STANDARD JUNCTION BOX. THE AIRCRAFT CABLE AND 1/2-20 STUD ARE DESIGNED TO SUPPORT 420 POUNDS WITH A 45° SWING AT CEILING LINE.

F / E0.5 CABLE HUNG LINEAR FIXTURE MOUNTING DETAIL

SCALE: NONE

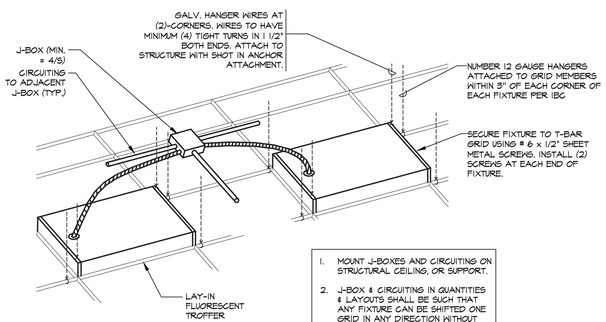

1. MOUNT J-BOXES AND CIRCUITING ON STRUCTURAL CEILING, OR SUPPORT.
2. J-BOX & CIRCUITING IN QUANTITIES & LAYOUTS SHALL BE SUCH THAT ANY FIXTURE CAN BE SHIFTED ONE GRID IN ANY DIRECTION WITHOUT ADDED CIRCUITING.

C / E0.5 FIXTURE MOUNTING DETAIL @ T-BAR CEILING

SCALE: NONE

GML ARCHITECTS · LLC
architects & planners
1575 DELUCCHI LN · SUITE 120
RENO · NEVADA 89502
P · 775 · 829 · 8814
F · 775 · 829 · 8828

STATE OF NEVADA — JOSEPH E. CARNEY — EXP. 06/30/15 — ELECTRICAL — No. 12011 — 6/4/14

6-2-14

CARSON CITY FLEET MAINTENANCE FACILITY EXPANSION

CARSON CITY, NEVADA

DATE	6-2-14
JOB NO	796
DRAWN	JVA
CHECKED	JEG

⚠ BUILDING DEPARTMENT COMMENTS 4/24/14

DETAILS

E0.5

PK Electrical, Inc.
Engineering · Design · Consulting
681 Sierra Rose Dr., Ste. B | Reno, Nevada 89511 | 775.826.9010
4600 South Syracuse, 9th Floor | Denver, Colorado 80237 | 303.256.6598
pkelectrical.com

© 2008-2011 PK Electrical, Inc.
13117

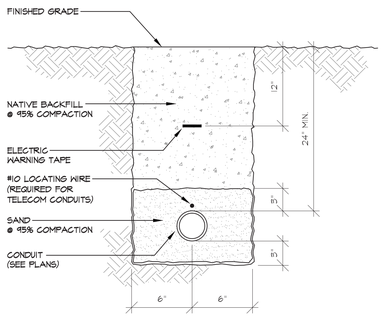

A E0.6 TYP 12" TRENCH DETAIL

SCALE: NONE

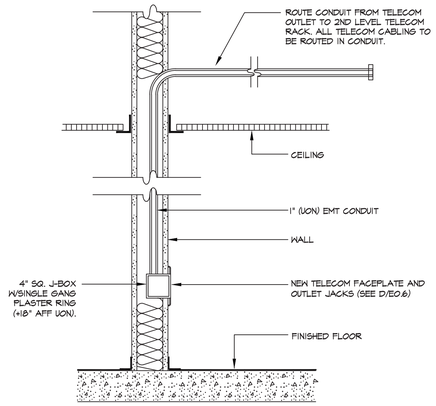

B E0.6 TELECOM OUTLET BOX ROUGHIN

SCALE: NONE

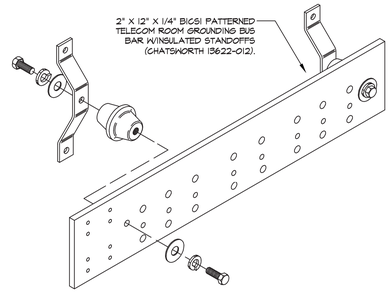

C E0.6 TELECOM GROUNDING BAR

SCALE: NONE

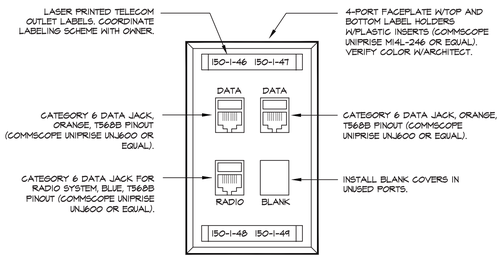

D E0.6 TELECOM / RADIO OUTLET

SCALE: NONE

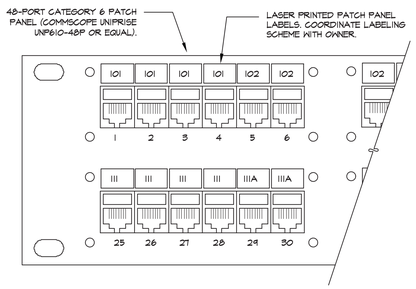

E E0.6 48 PORT CAT 6 PATCH PANEL

SCALE: NONE

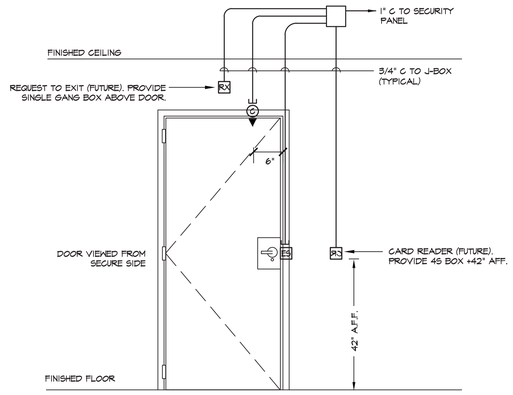

F E0.6 CARD READER W/ELECT STRIKE

SCALE: NONE

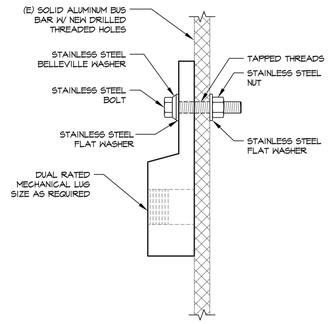

G E0.6 BUS TAP TERMINATION DETAIL

SCALE: NONE

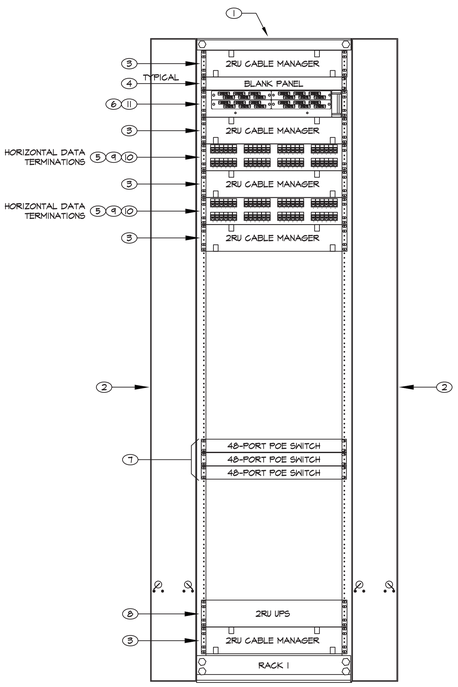

H E0.6 TELECOM RM RACK LAYOUT

SCALE: 1 1/2" = 1'-0"

TELECOM RACK SHEET NOTES

1. UL LISTED LOCKABLE EQUIPMENT CABINET WITH 2 SETS OF ADJUSTABLE SQUARE PUNCHED MOUNTING RAILS. CABINET TO BE 84" HIGH X 31.5" WIDE X 42" DEEP WITH PERFORATED FRONT AND REAR DOORS (CHATSWORTH TERAFRAME F-SERIES P/N FF3N-1138-C22-B OR APPROVED EQUAL). PROVIDE QTY (2) 25-PACK OF CAGE NUTS (CHATSWORTH P/N 12634-001). BOLT CABINET TO CONCRETE WITH (4) 1/2" DIAMETER CONCRETE EXPANSION ANCHORS. INSTALL #6 GROUND WIRE FROM CABINET TO GROUND BAR.
2. 5" WIDE HIGH VERTICAL CABLE MANAGER COMPATIBLE WITH THE EQUIPMENT CABINET (CHATSWORTH P/N 35045-G05 OR APPROVED EQUAL). PROVIDE 2 SETS (FRONT AND REAR) OF VERTICAL CABLE MANAGERS.
3. 2RU 14" WIDE HORIZONTAL CABLE MANAGER (CHATSWORTH P/N 30130-714).
4. 1RU FILLER PANEL (CHATSWORTH P/N 54537-000).
5. 48-PORT CAT 6 DATA PATCH PANEL (COMMSCOPE UNIPRISE UNP610-24P OR APPROVED EQUAL) . DRESS HORIZONTAL CABLING TO PATCH PANEL PER MANUFACTURER INSTRUCTIONS USING THE PROVIDED REAR CABLE MANAGEMENT BAR/BRACKET. SEE E/T0.6 FOR ADDITIONAL INFORMATION. HORIZONTAL CAT 6 CABLES SHALL BE GROUPED TOGETHER AT THE PATCH PANEL BY ROOM NUMBER. FOR EXAMPLE, THE DATA DROPS SERVING A ROOM SHALL BE TERMINATED IN A CONTIGUOUS NUMERICAL SEQUENCE AT THE PATCH PANEL.
6. 48-PORT 2RU FIBER TERMINATION CABINET (CORNING CCH-02U). PROVIDE 12F SM DUPLEX LC ADAPTER STRIPS WITH FACTORY INSTALLED PIGTAIL CASSETTES TO TERMINATE ALL BACKBONE SM FIBER (CORNING CCH-CS12-A9-POORE).
7. 1RU 48-PORT POE SWITCHES (BY OWNER).
8. 2RU 1500VA UPS (APC SMART-UPS XL P/N SUA1500RM2U W/MANAGEMENT MODULE AP9630).
9. PROVIDE CAT 6 PATCH CORDS FOR INTERCONNECTION OF PATCH PANEL PORTS AND OWNER FURNISHED SWITCHES. PROVIDE QTY (1) 7'-0" PATCH CORD FOR EVERY DATA DROP (COMMSCOPE UNIPRISE UNC6-WH-7F OR EQUAL). VERIFY PATCH CORD LENGTH AND COLOR WITH OWNER PRIOR TO ORDERING.
10. PROVIDE CAT 6 WORKSTATION CORDS FOR INTERCONNECTION OF WORKSTATION OUTLETS AND OWNER FURNISHED DEVICES (COMPUTERS, PHONES, CAMERAS, WIRELESS AP'S, ETC). PROVIDE QTY (1) 15'-0" PATCH CORD FOR EVERY QTY (2) DATA DROPS (COMMSCOPE UNIPRISE UNC6-WH-15F OR EQUAL). VERIFY PATCH CORD LENGTH AND COLOR WITH OWNER PRIOR TO ORDERING.
11. PROVIDE SINGLE MODE LC-LC FIBER OPTIC PATCH CORDS FOR INTERCONNECTION OF FIBER BACKBONE CABLING AND OWNER FURNISHED SWITCHES. PROVIDE QTY (4) 3-METER PATCH CORDS (CORNING P/N 040402R5120003M) FOR THE ENTIRE PROJECT. VERIFY FIBER PATCH CORD LENGTH WITH OWNER PRIOR TO ORDERING.

GML ARCHITECTS · LLC
architects & planners
1575 DELUCCHI LN · SUITE 120
RENO · NEVADA 89502
P · 775 · 829 · 8814
F · 775 · 829 · 8828

STATE OF NEVADA PROFESSIONAL ENGINEER JOSEPH E. GANSER EXP. 06/30/15 ELECTRICAL No. 21011
6-2-14

CARSON CITY FLEET MAINTENANCE FACILITY EXPANSION

CARSON CITY, NEVADA

DATE	6-2-14
JOB NO	796
DRAWN	JVA
CHECKED	JEG

⚠ BUILDING DEPARTMENT COMMENTS 4/24/14

DETAILS

E0.6

PK Electrical, Inc.
Engineering · Design · Consulting
681 Sierra Rose Dr., Ste. B | Reno, Nevada 89511 | 775.826.9010
4600 South Syracuse, 9th Floor | Denver, Colorado 80237 | 303.256.6598
pkelectrical.com

© 2008-2013 PK Electrical, Inc.
13117

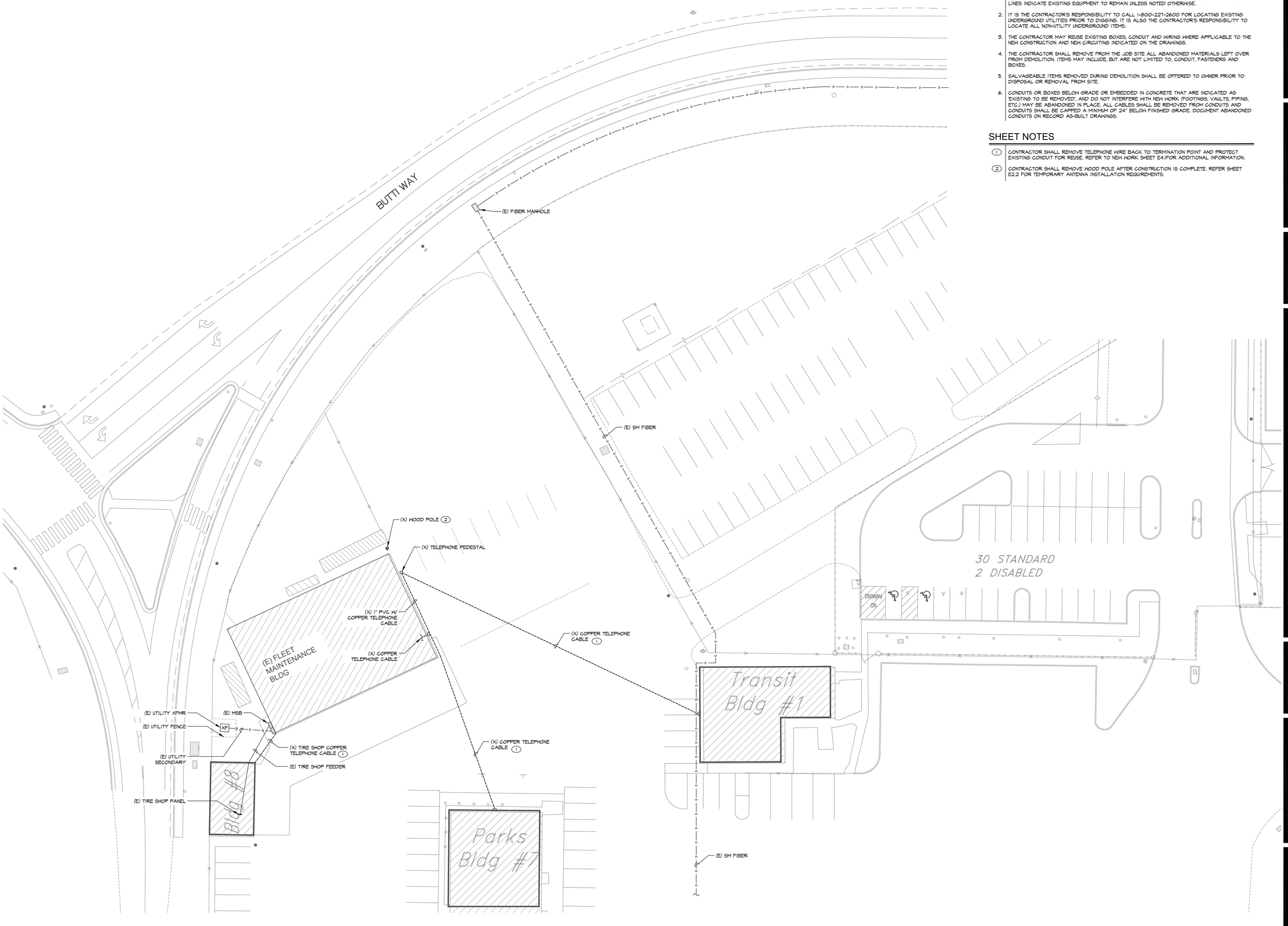

GENERAL NOTES

1. (X) AND/OR DASHED LINES INDICATE EXISTING EQUIPMENT TO BE REMOVED, (E) AND/OR SOLID LINES INDICATE EXISTING EQUIPMENT TO REMAIN UNLESS NOTED OTHERWISE.
2. IT IS THE CONTRACTOR'S RESPONSIBILITY TO CALL 1-800-227-2600 FOR LOCATING EXISTING UNDERGROUND UTILITIES PRIOR TO DIGGING. IT IS ALSO THE CONTRACTOR'S RESPONSIBILITY TO LOCATE ALL NON-UTILITY UNDERGROUND ITEMS.
3. THE CONTRACTOR MAY REUSE EXISTING BOXES, CONDUIT AND WIRING WHERE APPLICABLE TO THE NEW CONSTRUCTION AND NEW CIRCUITING INDICATED ON THE DRAWINGS.
4. THE CONTRACTOR SHALL REMOVE FROM THE JOB SITE ALL ABANDONED MATERIALS LEFT OVER FROM DEMOLITION. ITEMS MAY INCLUDE, BUT ARE NOT LIMITED TO, CONDUIT, FASTENERS AND BOXES.
5. SALVAGEABLE ITEMS REMOVED DURING DEMOLITION SHALL BE OFFERED TO OWNER PRIOR TO DISPOSAL OR REMOVAL FROM SITE.
6. CONDUITS OR BOXES BELOW GRADE OR EMBEDDED IN CONCRETE THAT ARE INDICATED AS 'EXISTING TO BE REMOVED', AND DO NOT INTERFERE WITH NEW WORK (FOOTINGS, VAULTS, PIPING, ETC.) MAY BE ABANDONED IN PLACE. ALL CABLES SHALL BE REMOVED FROM CONDUITS AND CONDUITS SHALL BE CAPPED A MINIMUM OF 24" BELOW FINISHED GRADE. DOCUMENT ABANDONED CONDUITS ON RECORD AS-BUILT DRAWINGS.

SHEET NOTES

1. CONTRACTOR SHALL REMOVE TELEPHONE WIRE BACK TO TERMINATION POINT AND PROTECT EXISTING CONDUIT FOR REUSE. REFER TO NEW WORK SHEET E4.1FOR ADDITIONAL INFORMATION.
2. CONTRACTOR SHALL REMOVE WOOD POLE AFTER CONSTRUCTION IS COMPLETE. REFER SHEET E2.2 FOR TEMPORARY ANTENNA INSTALLATION REQUIREMENTS.

A
E1.1
ELECTRICAL DEMOLITION SITE PLAN
SCALE: 1" = 20'-0"

GML ARCHITECTS · LLC
architects & planners
1575 DELUCCHI LN · SUITE 120
RENO · NEVADA 89502
P · 775 · 829 · 8814
F · 775 · 829 · 8828

PROFESSIONAL ENGINEER STATE OF NEVADA
JOSEPH E. GANSER
EXP. 06/30/15
ELECTRICAL
No. 21011
6-2-14

CARSON CITY FLEET MAINTENANCE FACILITY EXPANSION

CARSON CITY, NEVADA

DATE	6-2-14
JOB NO	796
DRAWN	JVA
CHECKED	JEG

⚠ BUILDING DEPARTMENT COMMENTS 4/24/14

ELECTRICAL DEMOLITION SITE PLAN

E1.1

PK Electrical, Inc.
Engineering · Design · Consulting
681 Sierra Rose Dr., Ste. B | Reno, Nevada 89511 | 775.826.9010
4600 South Syracuse, 9th Floor | Denver, Colorado 80237 | 303.256.6598
pkelectrical.com © 2008-2013 PK Electrical, Inc. 13117

GENERAL NOTES

1. (E) AND/OR DASHED LINES INDICATE EXISTING EQUIPMENT, (N) AND/OR SOLID LINES INDICATE NEW EQUIPMENT UNLESS NOTED OTHERWISE.
2. SEE ONELINE DIAGRAM(S) FOR CONDUIT, WIRE SIZES AND EQUIPMENT REQUIREMENTS.
3. IT IS THE CONTRACTOR'S RESPONSIBILITY TO COORDINATE WITH APPLICABLE UTILITY COMPANY'S DRAWINGS AND REPRESENTATIVES FOR DETERMINING THE EXACT RESPONSIBILITY OF EACH PARTY.
4. SEE NV ENERGY DRAWINGS FOR ALL WORK REQUIRED. CONTRACTOR SHALL BE RESPONSIBLE FOR INCLUDING ALL WORK REQUIRED IN BID. COORDINATE WITH NV ENERGY.
5. IT IS THE CONTRACTOR'S RESPONSIBILITY TO CALL 1-800-227-2600 FOR LOCATES PRIOR TO DIGGING. IT IS ALSO THE CONTRACTORS RESPONSIBILITY TO LOCATE ALL NON-UTILITY UNDERGROUND ITEMS.
6. THE MAXIMUM NUMBER OF CONDUIT BENDS SHOULD NOT BE GREATER THAN 270 DEGREES BETWEEN PULLING STRUCTURES. THIS INCLUDES THE AGGREGATE OF ALL HORIZONTAL AND VERTICAL CHANGES.
7. ALL CONDUIT, INNERDUCT, PULLBOXES AND VAULTS SHALL BE LABELED PER THE SPECIFICATIONS.
8. EACH CONDUIT AND INNERDUCT SHALL BE PROVIDED WITH A 1250 LBS. PULL ROPE.
9. COORDINATE LOCATION OF BELOW-GRADE CONDUITS, DUCT BANKS, ETC. WITH CIVIL ENGINEER AND OTHER TRADES PRIOR TO ROUGH-IN.
10. ALL RECEPTACLES WITH WEATHER PROOF DESIGNATION SHALL BE PROVIDED WITH 'WHILE IN USE' COVERS.

SHEET NOTES

1. INTERCEPT EXISTING UNDERGROUND CONDUIT AND 24-STRAND SINGLEMODE FIBER WITH NEW 40" MANHOLE (BASIS #FCA400046T-006 OR APPROVED EQUAL). MANHOLE COVER SHALL BE SECURED WITH PENTA-HEAD BOLTS AND SHALL BE STAMPED "FIBER OPTIC". PROVIDE RACKING IN MANHOLE FOR SUPPORT OF FIBER SPLICE AND CABLE LOOP.
2. 3" CONDUIT UP TO 2ND LEVEL TELECOM ROOM. CONDUIT STUB-UP THROUGH CONCRETE SLAB TO BE VINYL COATED RIGID STEEL. INSTALL 3" EMT CONDUIT FROM RIGID STUB-UP TO 2ND LEVEL.
3. SEE ONELINE DIAGRAMS FOR WIRE SIZE AND CONDUIT REQUIREMENTS.
4. FUSION SPLICE 12-STRANDS OF THE EXISTING 24-STRAND SINGLEMODE FIBER TO A NEW 12-STRAND SINGLEMODE CABLE TO NEW FLEET MAINTENANCE TELECOM ROOM. FUSION SPLICE THE REMAINING 12-STRANDS TO THE EXISTING 24-STRAND SINGLEMODE CABLE (12-STRANDS WILL REMAIN UNTERMINATED). FUSION SPLICE CABLES IN OSP RATED SPLICE CASE (3M SPLICE CASE 2178-5, FUSION SPLICE TRAY AND ACCESSORIES OR EQUAL). FIBER OPTIC SERVICE SHALL NOT BE INTERRUPTED AND A MIDPOINT ENTRY SHALL BE PERFORMED.
5. 3" PVC LARGE 24" RADIUS CONDUIT WITH 24-STRAND SM FIBER OPTIC CABLE. INSTALL QTY (3) 18MM HDPE INNERDUCT WITH SILICORE RIBBING TO ROUTE FIBER CABLE. COORDINATE CONDUIT ROUTING WITH BUILDING FOOTINGS.
6. EXTEND EXISTING TIRE SHOP TELEPHONE CONDUIT, MADE AVAILABLE DURING DEMOLITION, UP TO 2ND LEVEL TELECOM ROOM WITH ADDITIONAL EMT CONDUIT AND WITH 1,250 LB. PULL STRING. CONTRACTOR FIELD VERIFY CONDUIT TRADE SIZE PRIOR TO ROUGH-IN.

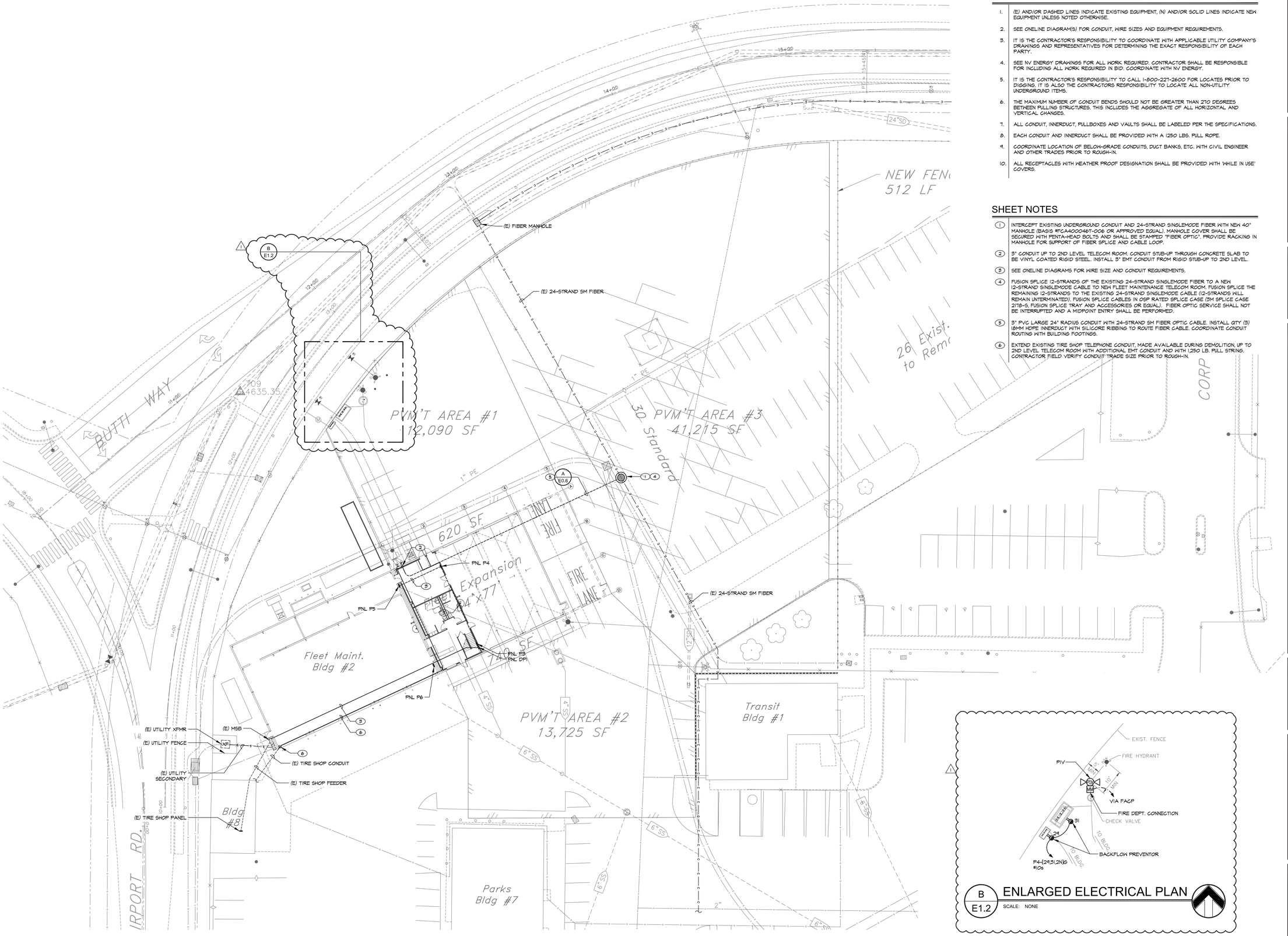

GML ARCHITECTS • LLC
architects & planners
1575 DELUCCHI LN • SUITE 120
RENO • NEVADA 89502
P • 775 • 829 • 8814
F • 775 • 829 • 8828

STATE OF NEVADA
JOSEPH E. GANSER
EXP. 06/30/15
ELECTRICAL
No. 21011
6-2-14

CARSON CITY FLEET MAINTENANCE FACILITY EXPANSION

CARSON CITY, NEVADA

DATE	6-2-14
JOB NO	796
DRAWN	JVA
CHECKED	JEG

1 BUILDING DEPARTMENT COMMENTS 4/24/14

ELECTRICAL SITE PLAN

E1.2

PK Electrical, Inc.
Engineering · Design · Consulting
681 Sierra Rose Dr., Ste. B | Reno, Nevada 89511 | 775.826.9010
4600 South Syracuse, 9th Floor | Denver, Colorado 80237 | 303.256.6598
pkelectrical.com © 2008-2011 PK Electrical, Inc. 13117

GENERAL NOTES

1. THIS DRAWING REPRESENTS THE EXISTING LIGHTING SYSTEMS WITHIN THE EXISTING BUILDING. THE CONTRACTOR IS RESPONSIBLE FOR REMOVING, RELOCATING AND REWIRING ALL EQUIPMENT AS INDICATED ON THE DRAWINGS, INCLUDING EQUIPMENT THAT LIES WITHIN WALLS AND CEILINGS TO BE DEMOLISHED OR REMODELED.
2. (X) AND/OR DASHED LINES INDICATE EXISTING EQUIPMENT TO BE REMOVED, (E) AND/OR SOLID LINES INDICATE EXISTING EQUIPMENT TO REMAIN UNLESS NOTED OTHERWISE.
3. SALVAGEABLE ITEMS REMOVED DURING DEMOLITION SHALL BE OFFERED TO OWNER PRIOR TO DISPOSAL OR REMOVAL FROM SITE.
4. EXISTING CIRCUITS AS INDICATED ARE BASED ON CASUAL FIELD OBSERVATION AND INFORMATION PER RECORD DRAWINGS AND SHALL BE FIELD VERIFIED BY ELECTRICAL CONTRACTOR PRIOR TO START OF DEMOLITION WORK.
5. THE CONTRACTOR SHALL SALVAGE AND REUSE EXISTING BOXES AND CONDUIT WHERE POSSIBLE. DAMAGED CONDUIT, FITTINGS BOXES, ETC. MAY NOT BE RE-USED. NEW CIRCUITING AS INDICATED ON THE DRAWINGS IS SHOWN FOR INTENT ONLY AND MAY VARY BASED ON ACTUAL FIELD CONDITIONS (NEW CIRCUITING SHALL MATCH EXISTING WHERE POSSIBLE TO UTILIZE EXISTING HOME-RUN CONDUITS, ETC.). KEEP AS-BUILT DRAWINGS CURRENT WITH ANY DEVIATION IN CIRCUITING FROM WHAT IS INDICATED WITHIN THESE PLANS.
6. THE CONTRACTOR SHALL REMOVE FROM THE JOB SITE ALL DISCARDED AND ABANDONED MATERIALS LEFT OVER FROM DEMOLITION AND INSTALLATION. THIS INCLUDES, BUT IS NOT LIMITED TO, CONDUIT, FASTENERS AND BOXES. MATERIALS EMBEDDED IN GRADE AND / OR CONCRETE MAY BE ABANDONED IN PLACE. ALL ABANDONED CONDUIT SHALL BE CAPPED.
7. SEE EXISTING ONELINE DIAGRAM AND DETAILS ON SHEET E0.2 FOR EQUIPMENT DEMOLITION.
8. EXISTING DATA/PHONE/TV INFRASTRUCTURE SHALL BE REMOVED IN ITS ENTIRETY. MAINTAIN EXISTING PHONE AND TV SERVICE POINT, EQUIPMENT AND CABLES.

SHEET NOTES

1. EXISTING LIGHT FIXTURES AND SWITCHES IN THIS AREA SHALL BE DISCONNECTED AND REMOVED IN THEIR ENTIRETY. PROTECT EXISTING CIRCUITING FOR REUSE.

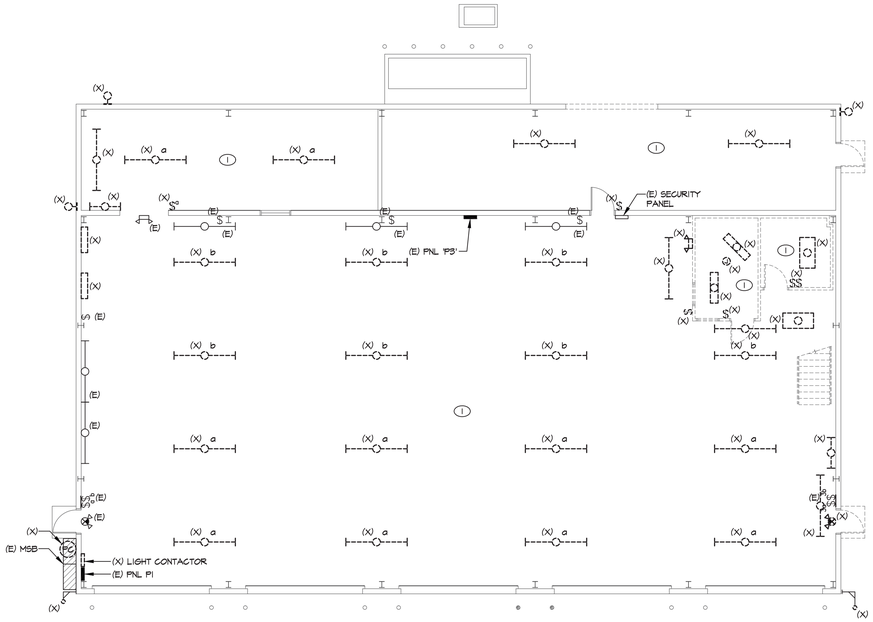

A
E2.1
DEMOLITION LIGHTING PLAN
BID ALTERNATE 'F'
SCALE: 1/8" = 1'-0"

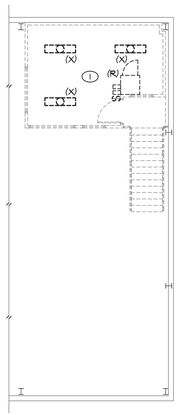

A
E2.1
DEMOLITION UPPER FLOOR LIGHTING PLAN
BID ALTERNATE 'F'
SCALE: 1/8" = 1'-0"

PK Electrical, Inc.
Engineering · Design · Consulting
681 Sierra Rose Dr., Ste. B | Reno, Nevada 89511 | 775.826.9010
4600 South Syracuse, 9th Floor | Denver, Colorado 80237 | 303.256.6598
pkelectrical.com © 2008-2011 PK Electrical, Inc.
13117

GML ARCHITECTS · LLC
architects & planners
1575 DELUCCHI LN · SUITE 120
RENO · NEVADA 89502
P · 775 · 829 · 8814
F · 775 · 829 · 8828

STATE OF NEVADA
PROFESSIONAL ENGINEER
JOSEPH E. CANSECO
EXP. 06/30/15
ELECTRICAL
No. 21011
6/4/14
6-2-14

CARSON CITY FLEET MAINTENANCE FACILITY EXPANSION

CARSON CITY, NEVADA

DATE	6-2-14
JOB NO	796
DRAWN	JVA
CHECKED	JEG

1 BUILDING DEPARTMENT COMMENTS 4/24/14

DEMOLITION LIGHTING PLAN

E2.1

GENERAL NOTES

1. THIS DRAWING REPRESENTS THE EXISTING POWER AND COMMUNICATIONS SYSTEMS WITHIN THE EXISTING BUILDING. THE CONTRACTOR IS RESPONSIBLE FOR REMOVING, RELOCATING AND REWIRING ALL EQUIPMENT AS INDICATED ON THE DRAWINGS, INCLUDING EQUIPMENT THAT LIES WITHIN WALLS AND CEILINGS TO BE DEMOLISHED OR REMODELED.
2. (X) AND/OR DASHED LINES INDICATE EXISTING EQUIPMENT TO BE REMOVED, (E) AND/OR SOLID LINES INDICATE EXISTING EQUIPMENT TO REMAIN UNLESS NOTED OTHERWISE.
3. SALVAGEABLE ITEMS REMOVED DURING DEMOLITION SHALL BE OFFERED TO OWNER PRIOR TO DISPOSAL OR REMOVAL FROM SITE.
4. EXISTING CIRCUITS AS INDICATED ARE BASED ON CASUAL FIELD OBSERVATION AND INFORMATION PER RECORD DRAWINGS AND SHALL BE FIELD VERIFIED BY ELECTRICAL CONTRACTOR PRIOR TO START OF DEMOLITION WORK.
5. THE CONTRACTOR SHALL SALVAGE AND REUSE EXISTING BOXES AND CONDUIT WHERE POSSIBLE. DAMAGED CONDUIT, FITTINGS BOXES, ETC. MAY NOT BE RE-USED. NEW CIRCUITING AS INDICATED ON THE DRAWINGS IS SHOWN FOR INTENT ONLY AND MAY VARY BASED ON ACTUAL FIELD CONDITIONS (NEW CIRCUITING SHALL MATCH EXISTING WHERE POSSIBLE TO UTILIZE EXISTING HOME-RUN CONDUITS, ETC.). KEEP AS-BUILT DRAWINGS CURRENT WITH ANY DEVIATION IN CIRCUITING FROM WHAT IS INDICATED WITHIN THESE PLANS.
6. THE CONTRACTOR SHALL REMOVE FROM THE JOB SITE ALL DISCARDED AND ABANDONED MATERIALS LEFT OVER FROM DEMOLITION AND INSTALLATION. THIS INCLUDES, BUT IS NOT LIMITED TO, CONDUIT, FASTENERS AND BOXES. MATERIALS EMBEDDED IN GRADE AND / OR CONCRETE MAY BE ABANDONED IN PLACE. ALL ABANDONED CONDUIT SHALL BE CAPPED.
7. SEE EXISTING ONELINE DIAGRAM AND DETAILS ON SHEET E0.2 FOR EQUIPMENT DEMOLITION.
8. EXISTING DATA/PHONE/TV INFRASTRUCTURE SHALL BE REMOVED IN ITS ENTIRETY. MAINTAIN EXISTING PHONE AND TV SERVICE POINT, EQUIPMENT AND CABLES.

SHEET NOTES

1. BID ALTERNATE 'F' EQUIPMENT TO BE DISCONNECTED BY ELECTRICAL CONTRACTOR AND REMOVED BY OTHERS. REMOVE DISCONNECT, CONDUIT, AND WIRE BACK TO POINT OF TERMINATION AND ALL OTHER ASSOCIATED ELECTRICAL COMPONENTS.
2. EXISTING PANELBOARD. REFER TO PANEL SCHEDULES FOR BRANCH BREAKER AND CIRCUITING MODIFICATIONS. SHOULD INSTALLATION OF CONDUCTORS AND CIRCUITING DIFFER FROM WHAT IS INDICATED WITHIN THIS DRAWING PACKAGE, PANELBOARD DIRECTORY CARD SHALL BE UPDATED TO REFLECT ACTUAL INSTALL. AS-BUILT DRAWINGS SHALL REFLECT ACTUAL CIRCUITING AS WELL. PANELBOARD SHALL BE LABELED PER DIVISION 16(26) SPECIFICATIONS (ENGRAVED PLASTIC NAMEPLATE INDICATING VOLTAGE, SOURCE, ETC.).
3. BASE BID EXISTING DISCONNECT SHALL BE DISCONNECTED AND REMOVED. REFER TO ONELINE DIAGRAM AND PANEL SCHEDULES FOR MORE INFORMATION.
4. BASE BID EXISTING ANTENNA ASSEMBLIES TO BE DISCONNECTED AND REMOVED BY ELECTRICAL CONTRACTOR AND RETURNED TO OWNER FOR RE-USE. REMOVE MOUNTING BRACKET, CABLING AND CONDUIT BACK TO POINT OF TERMINATION. COORDINATE PHASING WITH OWNERS REPRESENTATIVE PRIOR TO DEMOLITION.
5. BASE BID RELOCATE EXISTING DATA ANTENNA TO EXISTING WOOD POLE TO PROVIDE TEMPORARY DATA SERVICE DURING DEMOLITION. EXTEND EXISTING CABLE AND CONDUIT AS REQUIRED.
6. BID ALTERNATE 'F' EXISTING DATA CABINET TO REMAIN OPERATIONAL UNTIL NEW FIBER, SERVER AND DATA DROPS ARE INSTALLED. COORDINATE PHASING WITH OWNERS REPRESENTATIVE PRIOR TO DEMOLITION.
7. BASE BID EXISTING WOOD POLE AND ANTENNAS SHALL REMAIN OPERATIONAL UNTIL NEW FIBER AND SERVER ARE INSTALLED. COORDINATE PHASING WITH OWNERS REPRESENTATIVE PRIOR TO DEMOLITION.
8. WORK SHALL BE INCLUDED IN BASE BID.

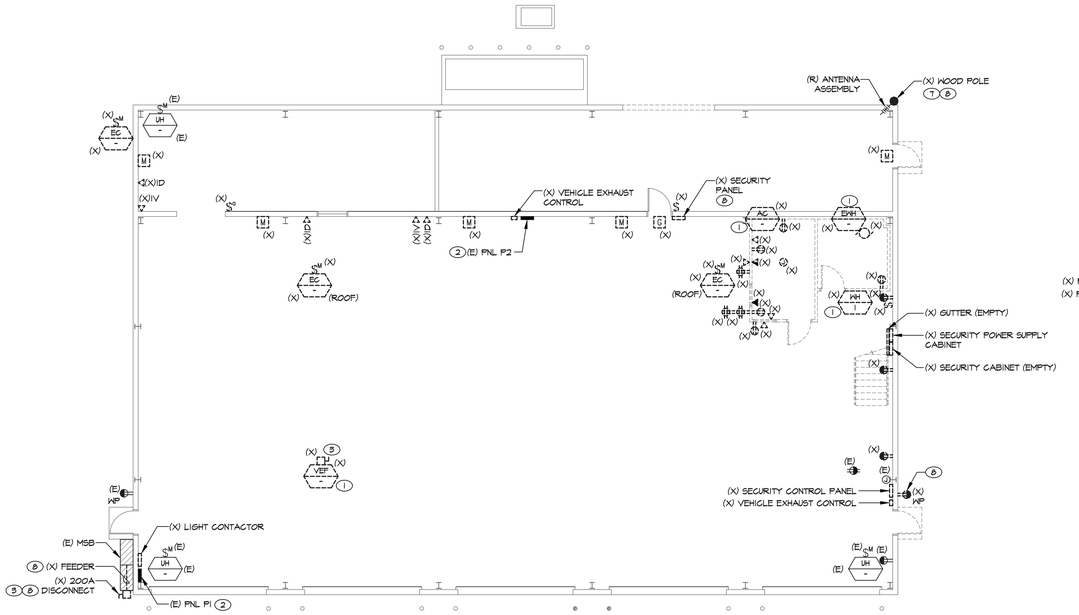

A
E2.2

DEMOLITION POWER & SIGNAL PLAN
BID ALTERNATE 'F'

SCALE: 1/8" = 1'-0"

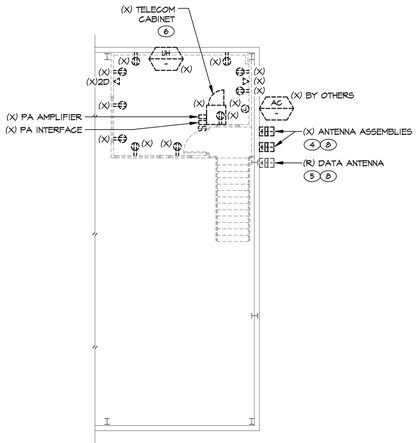

A
E2.2

DEMOLITION POWER & SIGNAL UPPER FLOOR PLAN
BID ALTERNATE 'F'

SCALE: 1/8" = 1'-0"

GML ARCHITECTS · LLC
architects & planners
1575 DELUCCHI LN · SUITE 120
RENO · NEVADA 89502
P · 775 · 829 · 8814
F · 775 · 829 · 8828

STATE OF NEVADA
JOSEPH GANSER
EXP. 06/30/15
ELECTRICAL
No. 12801
6/4/14
6-2-14

CARSON CITY
FLEET
MAINTENANCE
FACILITY
EXPANSION

CARSON CITY,
NEVADA

DATE	6-2-14
JOB NO	796
DRAWN	JVA
CHECKED	JEG

⚠ BUILDING DEPARTMENT COMMENTS 4/24/14

DEMOLITION POWER + SIGNAL PLANS

E2.2

PK Electrical, Inc.
Engineering · Design · Consulting
681 Sierra Rose Dr., Ste. B | Reno, Nevada 89511 | 775.826.9010
4600 South Syracuse, 9th Floor | Denver, Colorado 80237 | 303.256.6598
pkelectrical.com © 2008-2011 PK Electrical, Inc. 13117

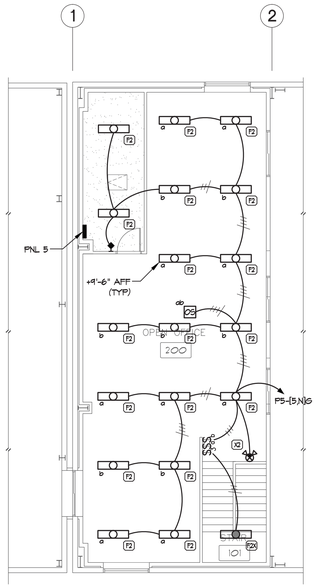

B
E3.1

UPPER LEVEL
LIGHTING PLAN - BASE BID

SCALE: 1/8" = 1'-0"

GENERAL NOTES

1. (E) AND/OR DASHED LINES INDICATE EXISTING EQUIPMENT, (N) AND/OR SOLID LINES INDICATE NEW EQUIPMENT UNLESS NOTED OTHERWISE.
2. LIGHT FIXTURES DESIGNATED AS "EMERGENCY" SHALL BE WIRED TO OPERATE WITH LOCAL SWITCHING UNDER NORMAL POWER CONDITIONS AND SHALL OPERATE VIA EMERGENCY BATTERY PACK UPON LOSS OF BUILDING UTILITY POWER ONLY, UNLESS NOTED OTHERWISE.
3. EXIT SIGNS SHALL BE WIRED AHEAD OF LOCAL SWITCHING FOR CONTINUOUS OPERATION. EXIT SIGNS SHALL BE WALL-MOUNTED ABOVE DOORS WHERE PRACTICAL. PROVIDE ADDITIONAL EXIT SIGNS AS NECESSARY FOR APPROVAL BY THE AUTHORITY HAVING JURISDICTION, PER ARCHITECT'S FINAL PATH OF EGRESS / EXITING PLAN.
4. PROVIDE MULTIPLE-GANG FACEPLATES AS NECESSARY WHERE TWO OR MORE LIGHT SWITCHES ARE INDICATED IN A COMMON LOCATION. SINGLE-GANG FACEPLATES FOR A GROUP OF LIGHT SWITCHES ARE NOT PERMITTED.
5. REFER TO ARCHITECTURAL REFLECTED CEILING PLANS, SECTIONS, ELEVATIONS, ETC. FOR EXACT LOCATION OF LIGHT FIXTURES.
6. EXACT LOCATION AND MOUNTING HEIGHT OF EXTERIOR BUILDING-MOUNTED FIXTURES SHALL BE COORDINATED WITH ARCHITECT PRIOR TO ROUGH-IN.
7. CONTRACTOR SHALL BE RESPONSIBLE FOR COORDINATING FINAL FIXTURE LOCATIONS, ABOVE-CEILING HOUSING CLEARANCES, ETC. WITH MECHANICAL, PLUMBING, SPRINKLER CONTRACTOR AND OTHER TRADES PRIOR TO ROUGH-IN.
8. CONDUIT FOR BUILDING-MOUNTED LIGHT FIXTURES SHALL BE ROUTED THROUGH INTERIOR OF BUILDING. LIGHT FIXTURE BACKBOXES SHALL BE RECESSED.
9. CONTRACTOR SHALL REPLACE BROKEN DEVICES, COVER PLATES, ETC. WHERE NECESSARY WITHIN AREA OF SCOPE.
10. REUSE EXISTING CONDUIT SYSTEMS FOR NEW WORK TO EXTENT POSSIBLE WHERE EXISTING LIGHT FIXTURES, DEVICES, ETC. ARE REMOVED DURING DEMOLITION PHASE.

SHEET NOTES

1. CONNECT TO EXISTING CIRCUIT MADE AVAILABLE DURING DEMOLITION.
2. CONNECT TO LIGHT SWITCH ON NEXT FLOOR LEVEL ABOVE / BELOW.
3. WORK IN EXISTING BUILDING SHALL BE INCLUDED IN BID ALTERNATE 'F' UNLESS NOTED OTHERWISE.
4. WORK SHALL BE INCLUDED IN BASE BID.
5. PROVIDE NEW NEMA 5-15 PLUG AND CORD TO MATCH EXISTING RECEPTACLE.
6. PROVIDE HOMERUN CONDUCTOR AS INDICATED. PROVIDE #10 THAN FOR REMAINING LIGHTING BRANCH CIRCUIT.
7. NOT REQUIRED FOR BID ALTERNATE 'B'.

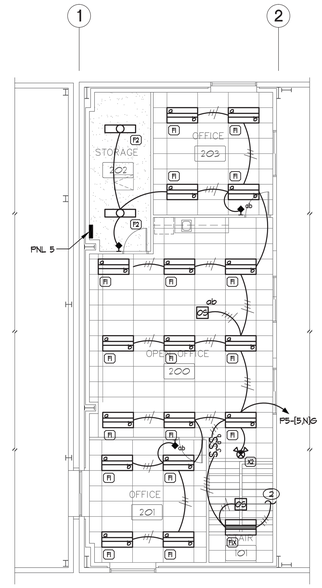

D
E3.1

UPPER LEVEL LIGHTING PLAN -
ALTERNATE 'C'

SCALE: 1/8" = 1'-0"

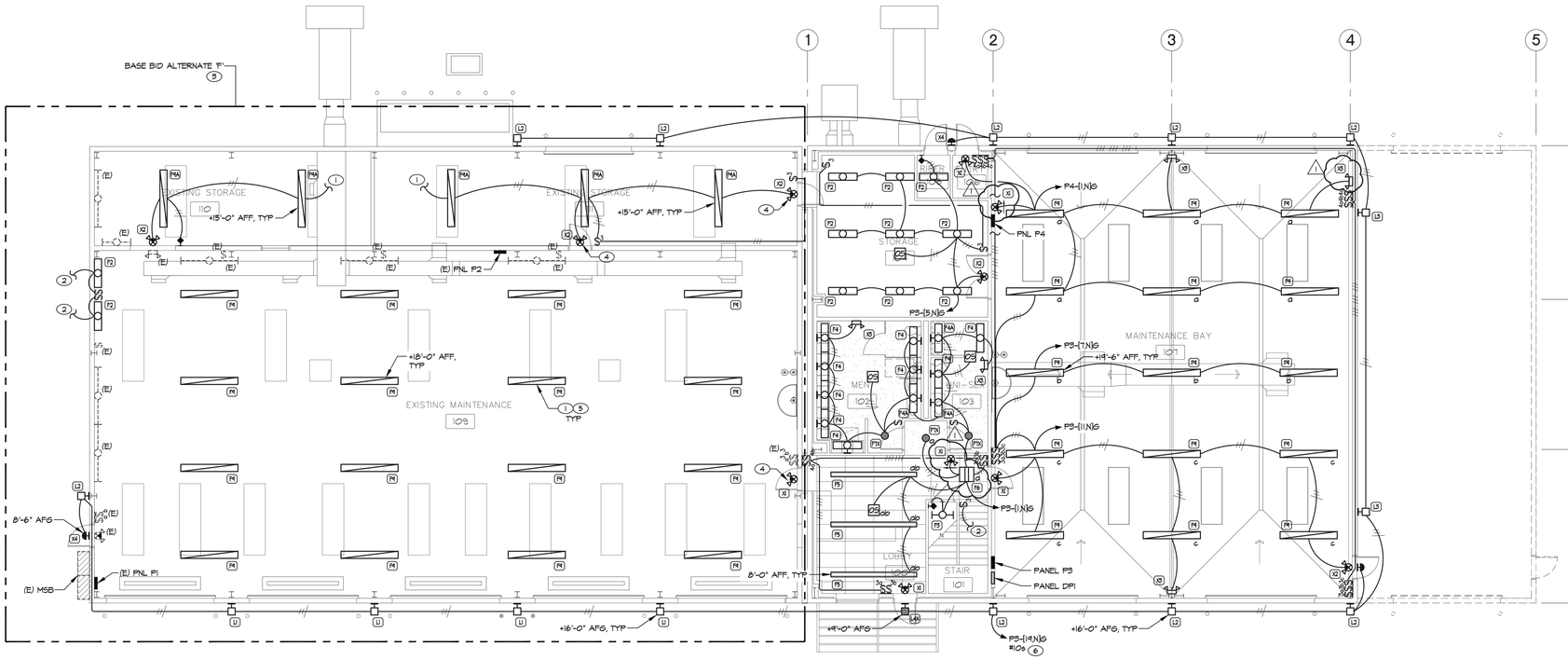

A
E3.1

LIGHTING PLAN

SCALE: 1/8" = 1'-0"

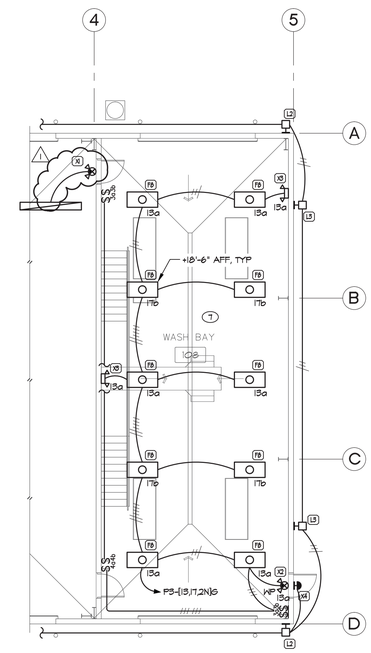

C
E3.1

WASH BAY LIGHTING PLAN -
ALTERNATE 'B'

SCALE: 1/8" = 1'-0"

PK Electrical, Inc.
Engineering · Design · Consulting
681 Sierra Rose Dr., Ste. B | Reno, Nevada 89511 | 775.826.9010
4600 South Syracuse, 9th Floor | Denver, Colorado 80237 | 303.256.6598
pkelectrical.com © 2008-2011 PK Electrical, Inc. 13117

GML ARCHITECTS · LLC
architects & planners
1575 DELUCCHI LN · SUITE 120
RENO · NEVADA 89502
P · 775 · 829 · 8814
F · 775 · 829 · 8828

STATE OF NEVADA
PROFESSIONAL ENGINEER
JOSEPH E. CANSECO
Exp. 06/30/15
ELECTRICAL
No. 12801
6/4/14

6-2-14

CARSON CITY FLEET MAINTENANCE FACILITY EXPANSION

CARSON CITY,
NEVADA

DATE	6-2-14
JOB NO	796
DRAWN	JVA
CHECKED	JEG

1 BUILDING DEPARTMENT COMMENTS 4/24/14

LIGHTING PLANS

E3.1

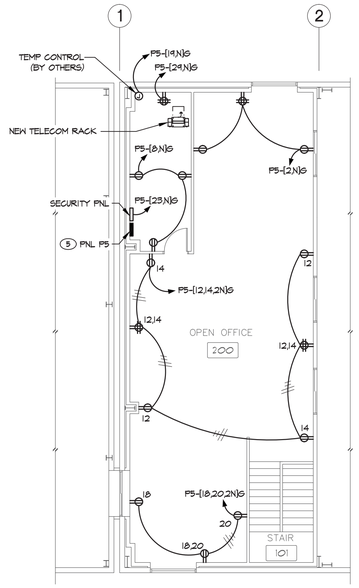

B E3.2 UPPER LEVEL POWER PLAN - BASE BID

SCALE: 1/8" = 1'-0"

GENERAL NOTES

1. (E) AND/OR DASHED LINES INDICATE EXISTING EQUIPMENT TO REMAIN, (R) AND/OR DASHED LINES INDICATE EQUIPMENT TO BE RELOCATED, (N) AND/OR SOLID LINES INDICATE NEW EQUIPMENT UNLESS NOTED OTHERWISE.
2. ALL EXISTING CABLING, CONDUIT AND BOXES WITHIN IMMEDIATE AREA OF SCOPE NOT SUPPORTED IN ACCORDANCE WITH NEC AND NFPA SHALL BE RE-SUPPORTED AS REQUIRED. PROVIDE NEW COVERS FOR ANY OPEN JUNCTION OR PULL BOXES WITHIN IMMEDIATE AREA OF SCOPE. INSTALLATIONS OR CONDITIONS FOUND TO VIOLATE BUILDING CODE SHALL BE BROUGHT TO THE ENGINEER'S ATTENTION IMMEDIATELY FOR ENGINEER'S RECOMMENDATION.
3. THE CONTRACTOR MAY REUSE EXISTING BOXES, CONDUIT AND WIRING WHERE APPLICABLE TO NEW CONSTRUCTION AND NEW CIRCUITING INDICATED ON DRAWINGS. PROVIDE NEW WHERE SPECIFICALLY INDICATED ON DRAWINGS.
4. CONTRACTOR SHALL COORDINATE FINAL RECEPTACLE LOCATIONS WITH TELECOM OUTLETS PRIOR TO ROUGH-IN. EACH TELECOM OUTLET SHALL HAVE A RECEPTACLE LOCATED WITHIN 12", MEASURED FROM CENTER OF DEVICES.
5. COORDINATE EXACT MOUNTING HEIGHTS AND LOCATIONS OF GENERAL RECEPTACLES, SPECIAL OUTLETS AND DISCONNECT SWITCHES IN SHOP AREAS WITH OWNER AND EQUIPMENT SUPPLIERS PRIOR TO ROUGH-IN.
6. VERIFY EXACT ELECTRICAL REQUIREMENTS, PLUG CONFIGURATIONS, ETC., AND FINAL LOCATIONS OF OWNER-PROVIDED EQUIPMENT WITH OWNER'S REPRESENTATIVE PRIOR TO ORDERING OF MATERIALS AND ROUGH-IN.

SHEET NOTES

1. RECEPTACLE FOR OWNER-PROVIDED EQUIPMENT. VERIFY FINAL LOCATION AND ELECTRICAL REQUIREMENTS WITH OWNER'S REPRESENTATIVE AND ARCHITECT PRIOR TO ORDERING OF MATERIALS AND ROUGH-IN.
2. VERIFY EXACT MOUNTING HEIGHT AND LOCATION OF RECEPTACLE WITH ARCHITECTURAL CASEWORK DRAWINGS PRIOR TO ROUGH-IN.
3. PROVIDE WEATHERPROOF DUPLEX GFCI RECEPTACLE AND WHILE-IN-USE COVER, INTERMATIC #AWP 1010MC OR EQUAL.
4. COORDINATE LOCATION WITH BUILDING STRUCTURE AND OWNER FOR EXACT LOCATION OF CORD REELS.
5. SEE ONELINE DIAGRAM FOR CONDUIT AND WIRE SIZES.
6. PROVIDE 250VDC, 600VAC, 50A, 4-WIRE TWIST-LOCK STYLE RECEPTACLE WITH GROUND FOR (PASS & SEYMOR #1374 OR EQUAL) VEHICLE LIFT SYSTEM.
7. NOT REQUIRED FOR BID ALTERNATE 'B'.
8. PROVIDE CORROSION RESISTANT MATERIAL WHERE EXPOSED AND SUBJECT TO DAMAGE. PROVIDE RIGID CONDUIT AND FITTINGS.

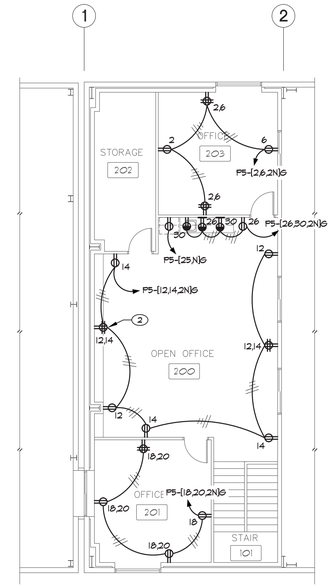

D E3.2 UPPER LEVEL POWER PLAN - ALTERNATE 'C'

SCALE: 1/8" = 1'-0"

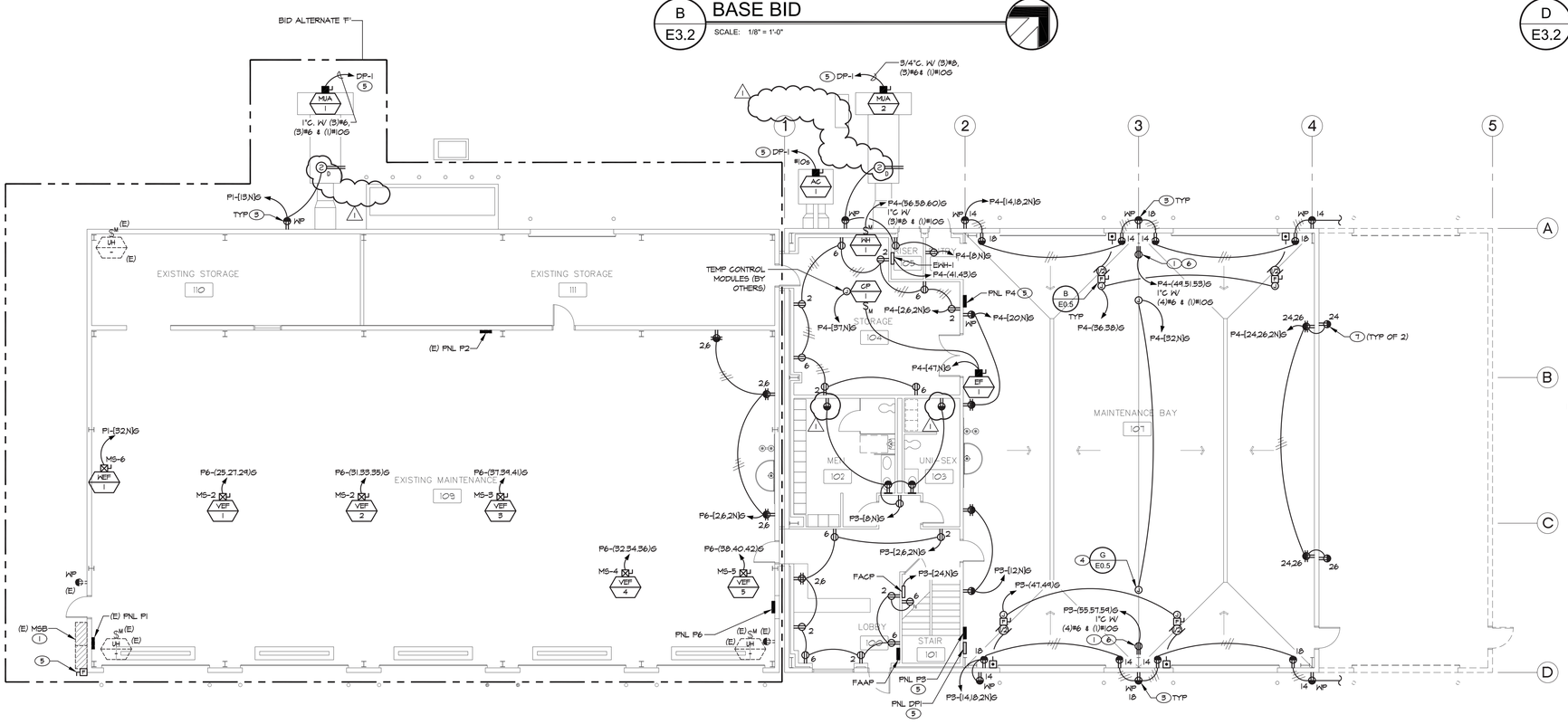

A E3.2 POWER PLAN - BASE BID

SCALE: 1/8" = 1'-0"

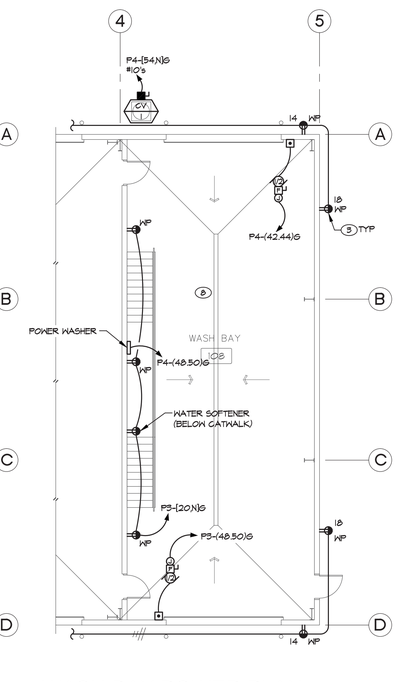

C E3.2 WASH BAY POWER PLAN - ALTERNATE 'B'

SCALE: 1/8" = 1'-0"

GML ARCHITECTS · LLC
architects & planners
1575 DELUCCHI LN · SUITE 120
RENO · NEVADA 89502
P · 775 · 829 · 8814
F · 775 · 829 · 8828

STATE OF NEVADA PROFESSIONAL ENGINEER JOSEPH E. CANSECO EXP. 06/30/15 ELECTRICAL No. 21201
6-2-14

CARSON CITY FLEET MAINTENANCE FACILITY EXPANSION

CARSON CITY, NEVADA

DATE	6-2-14
JOB NO	796
DRAWN	JVA
CHECKED	JEG

1 BUILDING DEPARTMENT COMMENTS 4/24/14

POWER PLANS

E3.2

PK Electrical, Inc.
Engineering · Design · Consulting
681 Sierra Rose Dr., Ste. B | Reno, Nevada 89511 | 775.826.9010
4600 South Syracuse, 9th Floor | Denver, Colorado 80237 | 303.256.6598
pkelectrical.com © 2008-2013 PK Electrical, Inc. 13117

INTRUSION DETECTION & CARD ACCESS SYSTEM GENERAL NOTES

1. FURNISH AND INSTALL A COMPLETE AND OPERATIONAL INTRUSION DETECTION SYSTEM. INSTALL ALL WORK IN ACCORDANCE WITH THE FOLLOWING CODES AND STANDARDS:
   - ANSI/NFPA-70
   - UL 1076 (BURGLAR ALARM AND SYSTEMS)
   - AMERICAN WITH DISABILITIES ACT (ADA).
2. AT A MINIMUM, THE SYSTEM SHALL CONSIST OF THE FOLLOWING COMPONENTS:
   - MAGNETIC DOOR POSITION CONTACTS AT ALL EXTERIOR DOORS AND ROLL-UP DOORS.
   - GLASS BREAK DETECTORS AT EXTERIOR WINDOWS.
   - MOTION DETECTORS AT LOCATIONS SHOWN.
   - KEYPADS FOR ARMING AND DISARMING THE SYSTEM AT LOCATIONS SHOWN.
   - ZONED INTRUSION DETECTION PANEL WITH CAPACITY FOR ALL DEVICES SHOWN ON THE DRAWINGS PLUS 25% FUTURE EXPANSION.
   - AUTO DIALER.
   - POWER SUPPLIES TO POWER THE PANEL AND ALL DEVICES.
   - BATTERIES AND BATTERY CHARGERS. SUBMIT BATTERY CALCULATIONS FOR APPROVAL. BATTERIES SHALL BACKUP THE ENTIRE SYSTEM FOR A MINIMUM OF 2 HOURS.
3. ALL SECURITY DEVICES INCLUDING DOOR POSITION CONTACTS, GLASS BREAK SENSORS AND MOTION SENSORS SHALL BE ADDRESSABLE. WHEN A DEVICE IS IN ALARM THE SYSTEM SHALL IDENTIFY AND REPORT THE LOCATION OF THE DEVICE.
4. NOT ALL DEVICES AND CABLING ARE SHOWN ON THE PLAN. SUBMIT SHOP DRAWINGS FOR APPROVAL INCLUDING POINT-TO-POINT WIRING AND PANEL BLOCK DIAGRAMS SHOWING ALL DEVICES AND REQUIRED CABLING.
5. ALL SECURITY CABLE SHALL BE ROUTED IN CONDUIT FROM THE DEVICES TO THE SECURITY PANEL.
6. SUBMIT CUT SHEETS FOR APPROVAL OF ALL SECURITY DEVICES, PANELS, POWER SUPPLIES, BATTERIES, BATTERY CHARGERS AND CABLING.
7. AT THE COMPLETION OF THE PROJECT, TEST AND COMMISSION THE ENTIRE SYSTEM. PROGRAM THE SYSTEM IN ACCORDANCE WITH OWNER REQUIREMENTS. PROVIDE 1-HOUR TRAINING TO THE OWNER AT THE COMPLETION OF THE PROJECT. PROVIDE 2 SETS OF O&M MANUALS. THE ENTIRE SECURITY SYSTEM SHALL BE GUARANTEED TO BE FREE FROM DEFECTS IN WORKMANSHIP AND MATERIALS FOR 1-YEAR FROM THE DATE OF FINAL ACCEPTANCE. CONTRACTOR WILL PROMPTLY REMEDY SUCH DEFECTS AND ANY SUBSEQUENT DAMAGE CAUSED BY THE DEFECTS OR REPAIR AT NO EXPENSE TO THE OWNER.

INTRUSION DETECTION SYSTEM LEGEND

SEC	INTRUSION DETECTION CONTROL PANEL (HONEYWELL ADEMCO VISTA 128BP). PROVIDE DIALER, POWER SUPPLIES, BATTERIES AND BATTERY CHARGERS FOR THE ENTIRE SYSTEM.
K	KEYPAD (HONEYWELL ADEMCO 6160). PROVIDE 18/4 PLENUM TWISTED PAIR CABLE TO EACH KEYPAD.
C	ADDRESSABLE MAGNETIC DOOR POSITION CONTACT (HONEYWELL ADEMCO 4934SN OR 4191SN). PROVIDE 18/4 PLENUM TWISTED PAIR CABLE TO EACH CONTACT.
C/A	ADDRESSABLE MAGNETIC WINDOW POSITION CONTACT (HONEYWELL ADEMCO 4934SN OR 4191SN). PROVIDE 18/4 PLENUM TWISTED PAIR CABLE TO EACH CONTACT.
C/R	ADDRESSABLE MAGNETIC ROLLUP DOOR POSITION CONTACT (HONEYWELL ADEMCO 4954SN). PROVIDE 18/4 PLENUM TWISTED PAIR CABLE TO EACH CONTACT.
M	ADDRESSABLE MOTION DETECTION SENSOR (HONEYWELL ADEMCO 1525005N W/SMB-10C MOUNT). PROVIDE 18/4 PLENUM TWISTED PAIR CABLE TO EACH SENSOR.
G	ADDRESSABLE GLASS BREAK SENSOR (HONEYWELL ADEMCO FG1625SN). PROVIDE 18/4 PLENUM TWISTED PAIR CABLE TO EACH SENSOR.
CR	CARD READER (FUTURE). PROVIDE CONDUIT ROUGHIN ONLY (SEE F/E0.6).
ES	ELECTRIC STRIKE (FUTURE). PROVIDE CONDUIT ROUGHIN ONLY (SEE F/E0.6).

GENERAL TELECOM NOTES

1. LOCATE TELECOM OUTLETS DIRECTLY ADJACENT TO ELECTRICAL OUTLETS TYPICAL. COORDINATE LAYOUT OF TELECOM OUTLETS WITH ELECTRICAL DRAWINGS.
2. ROUTE ALL DATA CABLING IN CONDUIT FROM TELECOM OUTLET TO 2ND LEVEL TELECOM RACK.

TELECOM SHEET NOTES

1. INSTALL 1" CONDUIT FROM EACH TELECOM OUTLET TO UPPER LEVEL TELECOM RACK. SEE DETAILS B/E0.6 AND D/E0.6 FOR TYPICAL TELECOM OUTLET ROUGHIN DETAILS.
2. INSTALL QTY OF CAT 6 DATA AND RADIO SYSTEM DROPS TO EACH TELECOM OUTLET AS SHOWN ON THE DRAWINGS. FOR EXAMPLE '2D+1R' = 2 CAT 6 DATA DROPS AND 1 CAT 6 RADIO DROP. DATA CABLES SHALL BE PLENUM RATED WITH AN ORANGE JACKET (COMMSCOPE 6504+ OR EQUAL). TERMINATE ALL DATA CABLES ON ORANGE CAT 6 DATA JACKS AT THE WORK AREA OUTLETS AND ON 48-PORT CAT 6 PATCH PANELS IN THE 2ND LEVEL TELECOM RACK. TERMINATE ALL RADIO CABLES ON BLUE CAT 6 DATA JACKS AT THE WORK AREA OUTLETS AND ON A 24-PORT WALL MOUNTED PATCH PANEL IN THE 2ND LEVEL OPEN OFFICE 200 (SEE NOTE 14).
3. CAT 6 DATA OUTLET FOR WIRELESS ACCESS POINT LOCATED ABOVE CEILING. INSTALL DATA JACK IN 2-PORT SURFACE MOUNTED PLASTIC HOUSING (COMMSCOPE M102SMB-B-262). PROVIDE 25'-0" CABLE LOOP COILED ABOVE CEILING SO THAT THE WIRELESS ACCESS POINT CAN BE RELOCATED ANYWHERE WITHIN A 25'-0" RADIUS FROM THE LOCATION SHOWN ON THE DRAWINGS.
4. UL LISTED LOCKABLE EQUIPMENT CABINET WITH 2 SETS OF ADJUSTABLE SQUARE PUNCHED MOUNTING RAILS. CABINET TO BE 84" HIGH X 31.5" WIDE X 42" DEEP WITH PERFORATED FRONT AND REAR DOORS (CHATSWORTH TERAFRAME F-SERIES P/N FF3N-113B-C22-B OR APPROVED EQUAL). PROVIDE QTY (2) 25-PACK OF CAGE NUTS (CHATSWORTH P/N 12639-001). BOLT CABINET TO CONCRETE WITH (4) 1/2" DIAMETER CONCRETE EXPANSION ANCHORS. INSTALL #6 GROUND WIRE FROM CABINET TO GROUND BAR. SEE H/E0.6 FOR ADDITIONAL RACK REQUIREMENTS.
5. 3/4" FIRE TREATED AC PLYWOOD (TYPICAL FOR ALL WALLS). RUN PLYWOOD SHEETS VERTICALLY FROM 6" AFF TO 8'-6". PAINT PLYWOOD WITH TWO COATS OF WHITE PAINT. MASK FIRE TREATMENT LABELS PRIOR TO PAINTING.
6. UL LISTED 1/4" X 2" X 12" BIGBI PATTERNED COPPER TELECOM GROUNDING BUSBAR W/INSULATED STANDOFFS (CHATSWORTH P/N 13622-012). BOND BUSBAR TO MAIN ELECTRICAL PANEL SERVING THE ROOM AND BUILDING STEEL. BOND BUSBAR TO BUILDING STEEL AND ELECTRICAL PANEL SERVING ROOM WITH #4 GREEN INSULATED GROUND CONDUCTOR. SEE C/E0.6 FOR ADDITIONAL REQUIREMENTS.
7. 24" DIAMETER WALL MOUNTED RECLOSEABLE STORAGE RINGS FOR BACKBONE FIBER AND COPPER CABLING SLACK STORAGE (LEVITON P/N 40400-FR).
8. NEW INTRUSION DETECTION DEVICE. INSTALL NEW CABLING FROM DEVICE TO 2ND LEVEL SECURITY PANEL. ROUTE ALL SECURITY CABLING IN CONDUIT.
9. CAT 6 DATA OUTLET FOR IP VIDEO SURVEILLANCE CAMERA. INSTALL DATA JACK IN 2-PORT SURFACE MOUNTED PLASTIC HOUSING (COMMSCOPE M102SMB-B-262). COORDINATE EXACT MOUNTING LOCATION AND HEIGHT WITH OWNER.
10. WALL MOUNT ANTENNA FACING EAST. COORDINATE WITH OWNER FOR FINAL LOCATION PRIOR TO ROUGH-IN.
11. FURNISH AND INSTALL 1-1/2" CONDUIT FROM ANTENNA TO FUTURE RADIO EQUIPMENT LOCATION.
12. PROVIDE (2) CAT 6 DATA DROPS AT EXISTING NETWORK RACK IN UPPER MEZZANINE OFFICE. COORDINATE LOCATION WITH OWNER.
13. 12" WIDE LADDER RACK MOUNTED AT 8'-0" AFF (CHATSWORTH 11252-712 OR EQUAL).
14. 24-PORT CAT 6 PATCH PANEL FOR TERMINATION OF RADIO CABLING. WALL MOUNT ON 4X8 PLYWOOD BACKBOARD WITH IRU WALL MOUNTING BRACKET.

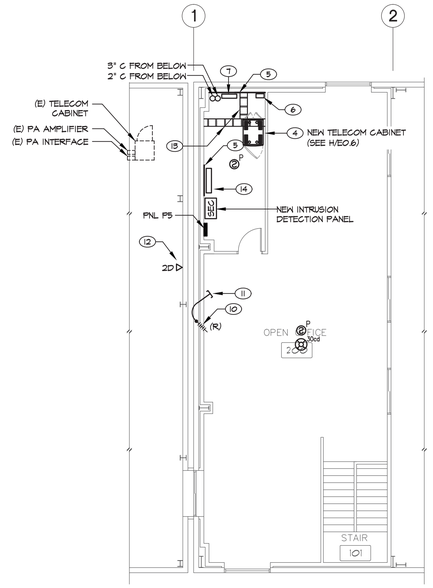

B E4.1 UPPER LEVEL SIGNAL PLAN - BASE BID

SCALE: 1/8" = 1'-0"

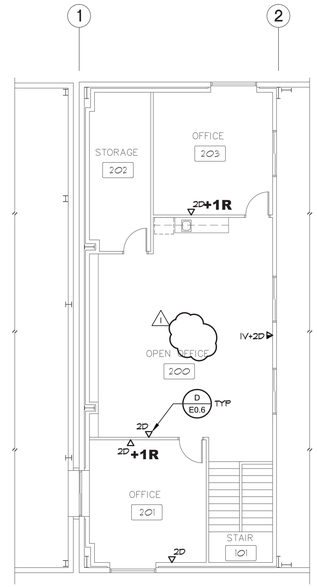

D E4.1 UPPER LEVEL SIGNAL PLAN - ALTERNATE 'C'

SCALE: 1/8" = 1'-0"

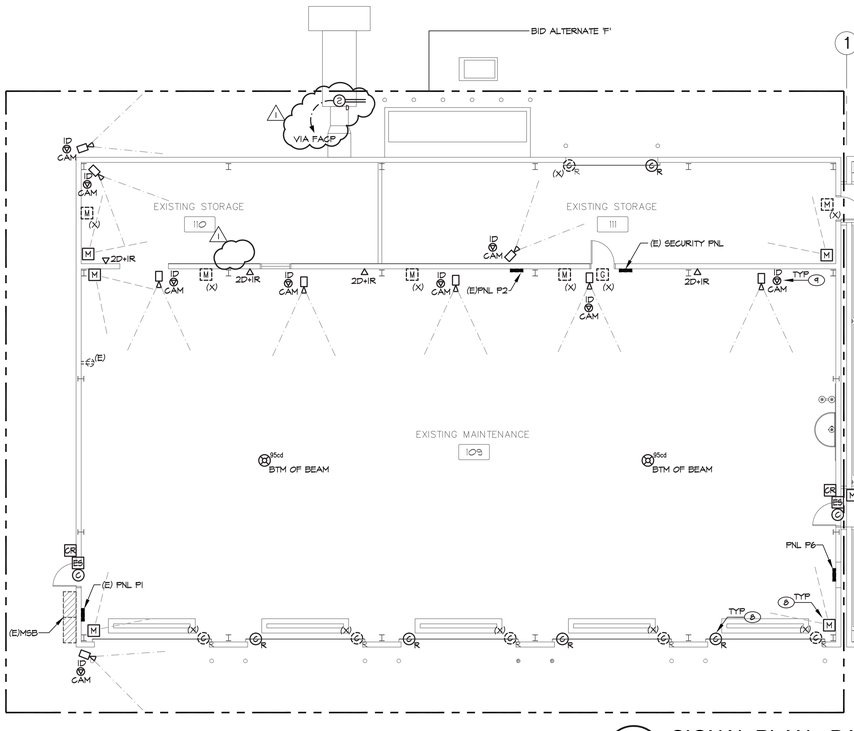

A E4.1 SIGNAL PLAN - BASE BID

SCALE: 1/8" = 1'-0"

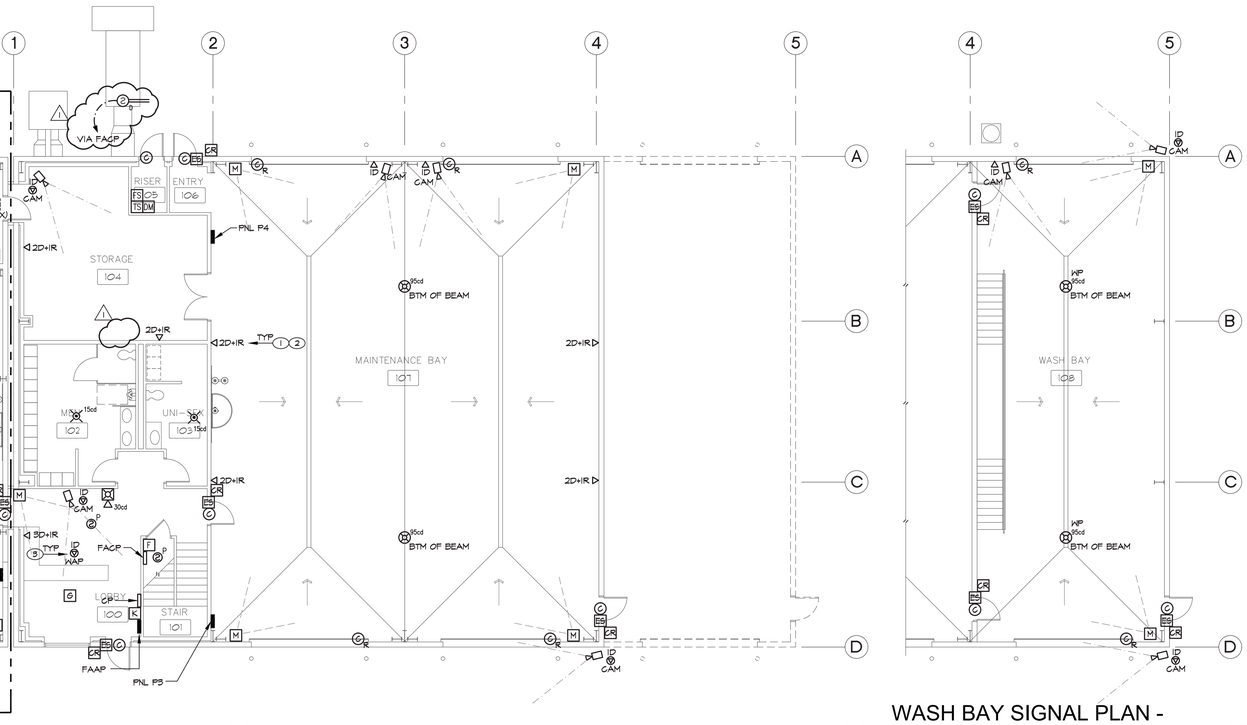

C E4.1 WASH BAY SIGNAL PLAN - ALTERNATE 'B'

SCALE: 1/8" = 1'-0"

GML ARCHITECTS · LLC
architects & planners
1575 DELUCCHI LN · SUITE 120
RENO · NEVADA 89502
P · 775 · 829 · 8814
F · 775 · 829 · 8828

STATE OF NEVADA · PROFESSIONAL ENGINEER · JOSEPH E. GANSER · EXP. 06/30/15 · ELECTRICAL · No. 21011 · 6-2-14

CARSON CITY FLEET MAINTENANCE FACILITY EXPANSION

CARSON CITY, NEVADA

DATE	6-2-14
JOB NO	796
DRAWN	JVA
CHECKED	JEG

1 BUILDING DEPARTMENT COMMENTS 4/24/14

SIGNAL PLANS

E4.1

PK Electrical, Inc.
Engineering · Design · Consulting
681 Sierra Rose Dr., Ste. B | Reno, Nevada 89511 | 775.826.9010
4600 South Syracuse, 9th Floor | Denver, Colorado 80237 | 303.256.6598
pkelectrical.com © 2008-2011 PK Electrical, Inc. 13117