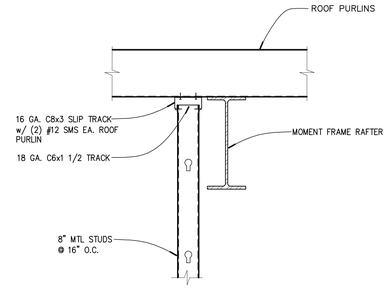

Wall Connection Detail (12)

3/4"=1'-0"

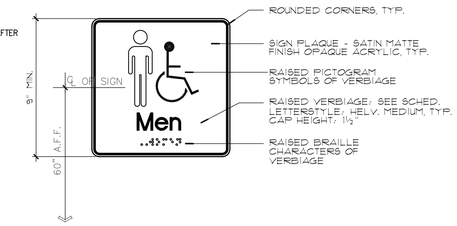

Sign Type "B" (8)

3" = 1'-0"

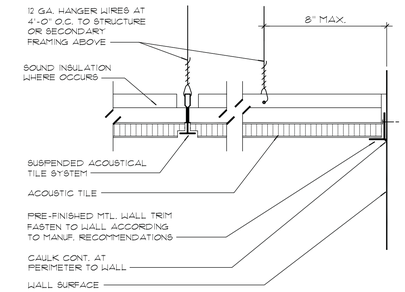

Typ. Ceiling Detail (4)

3"=1'-0"

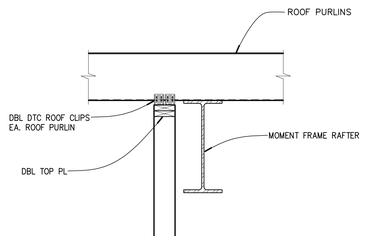

Wall Connection Detail (11)

3/4"=1'-0"

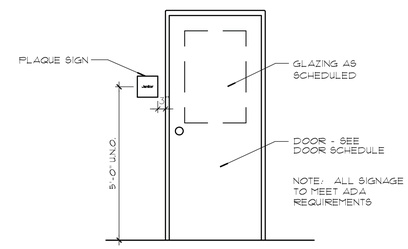

Typ. Signage Placement (7)

1/2" = 1'-0"

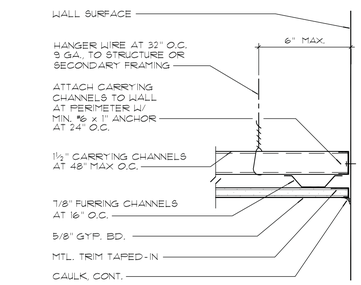

Typ. Ceiling Detail (3)

3"=1'-0"

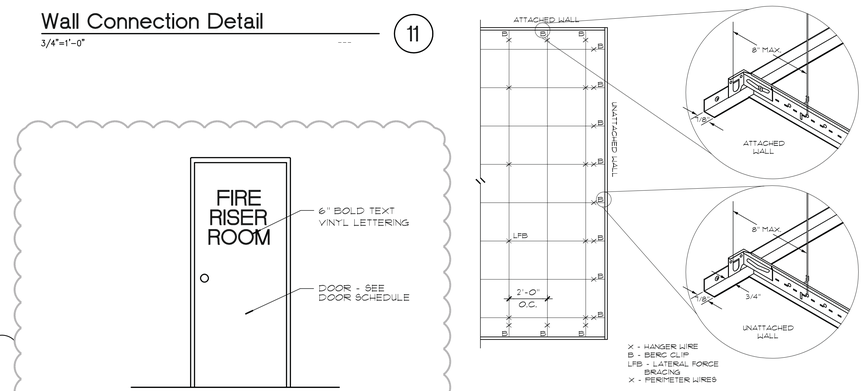

BERC2 Ceiling Detail (6)

N.T.S.

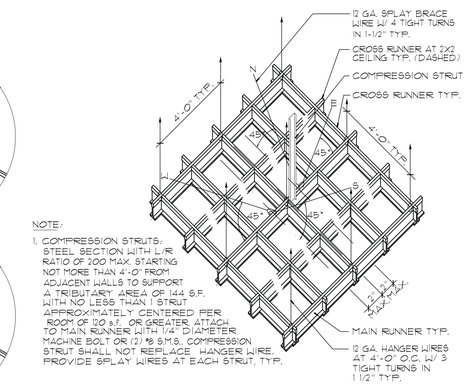

NOTE:

1. COMPRESSION STRUTS: STEEL SECTION WITH L/R RATIO OF 200 MAX. STARTING NOT MORE THAN 4'-0" FROM ADJACENT WALLS TO SUPPORT A TRIBUTARY AREA OF 144 S.F. WITH NO LESS THAN 1 STRUT APPROXIMATELY CENTERED PER ROOM OF 120 s.f. OR GREATER. ATTACH TO MAIN RUNNER WITH 1/4" DIAMETER MACHINE BOLT OR (2) #8 S.M.S.. COMPRESSION STRUT SHALL NOT REPLACE HANGER WIRE. PROVIDE SPLAY WIRES AT EACH STRUT, TYP.

Wire Bracing - Lay-In Ceiling (2)

N.T.S.

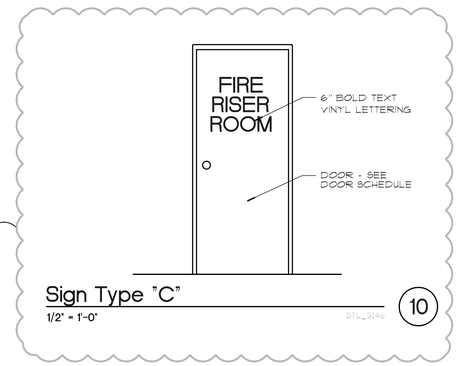

Sign Type "C" (10)

1/2" = 1'-0"

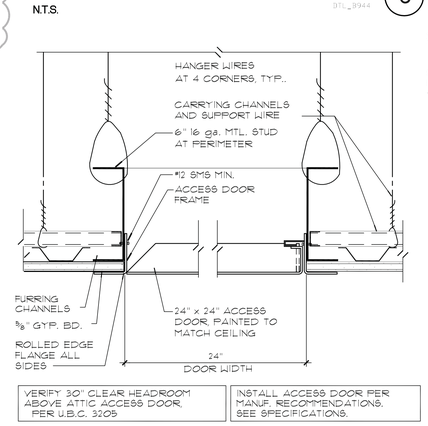

VERIFY 30" CLEAR HEADROOM ABOVE ATTIC ACCESS DOOR, PER U.B.C. 3205	INSTALL ACCESS DOOR PER MANUF. RECOMMENDATIONS, SEE SPECIFICATIONS.

Ceiling Access Door Detail (5)

3"=1'-0"

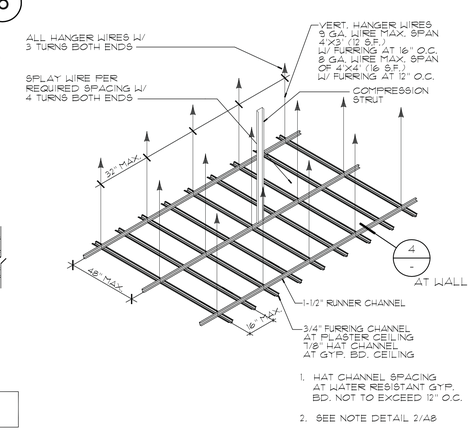

1. HAT CHANNEL SPACING AT WATER RESISTANT GYP. BD. NOT TO EXCEED 12" O.C.
2. SEE NOTE DETAIL 2/A8

Wire Bracing - Susp. Gyp. Bd. (1)

N.T.S.

Sign Type "B" (9)

3" = 1'-0"

GML ARCHITECTS · LLC
architects & planners
1575 DELUCCHI LN · SUITE 120
RENO · NEVADA 89502
P · 775 · 829 · 8814
F · 775 · 829 · 8828

JOHN D. GANTNER REGISTERED No. 1314 ARCHITECT STATE OF NEVADA
5-2-14

CARSON CITY FLEET MAINTENANCE FACILITY EXPANSION

CARSON CITY, NEVADA

DATE	6-2-14
JOB NO	796
DRAWN	RBR
CHECKED	MLM/JDG

⚠ BUILDING DEPARTMENT COMMENTS 4/24/14

DETAILS

A10

ABBREVIATIONS

AB	ANCHOR BOLT	FIN	FINISH	OC	ON CENTER
ACI	AMERICAN CONCRETE INSTITUTE	FLR	FLOOR	OD	OUTSIDE DIAMETER
		FOUND	FOUNDATION	OH	OPPOSIDE HAND
AFF	ABOVE FINISH FLOOR	F.O.	FACE OF	OPNG	OPENING
AGG	AGGREGATE	FS	FAR SIDE	OSB	ORIENTED STRAND BOARD
AISC	AMERICAN INSTITUTE OF STEEL CONSTRUCTION	FT	FEET	PERP	PERPENDICULAR
		FTG	FOOTING	PL	PLATE
ALT	ALTERNATE	GA	GAUGE	PLF	POUNDS PER LINEAR FOOT
ALUM	ALUMINUM	GALV	GALVANIZED	PLYWD	PLYWOOD
APPROX	APPROXIMATELY	GLB	GLULAM BEAM	PSI	POUNDS PER SQUARE INCH
ARCH	ARCHITECT(URAL)	HDR	HEADER	PSF	POUNDS PER SQUARE FOOT
ASTM	AMERICAN SOCIETY FOR TESTING OF MATERIALS	HORIZ. (H)	HORIZONTAL	PSL	PARALLEL STRAND LUMBER (PARALLAM)
		HSB	HIGH STRENGTH BOLT		
BFF	BELOW FINISH FLOOR	HSS	HOLLOW STEEL SECTION	PT	PRESSURE TREATED, POST TENSIONED
BLDG	BUILDING	IBC	INTERNATIONAL BUILDING CODE		
BLKG	BLOCKING			QA	QUALITY ASSURANCE
BM	BEAM	ID	INSIDE DIMENSION	QC	QUALITY CONTROL
B.O.	BOTTOM OF	IN	INCHES	REINF	REINFORCED
BOT	BOTTOM	INT	INTERIOR	REQD	REQUIRED
CIP	CAST IN PLACE	JST	JOIST	SA	SCREW ANCHOR
CJ	CONSTRUCTION JOINT, CONTROL JOINT	JT	JOINT	SCH, SCHED	SCHEDULE
		K	KIP (1000 LBS)	SHTG	SHEATHING
CL	CENTERLINE	KS	KING STUD	SIM	SIMILAR
CLG	CEILING	L	ANGLE	SOG	SLAB ON GRADE
CLR	CLEAR	LBS	POUNDS	SS	STAINLESS STEEL
CMU	CONCRETE MASONRY UNIT	LLH	LONG LEG HORIZONTAL	ST, STL	STEEL
CONT	CONTINUOUS	LLV	LONG LEG VERTICAL	STAG	STAGGERED
COL	COLUMN	LT WT	LIGHT WEIGHT	STD	STANDARD
CONC	CONCRETE	LVL	LAMINANTED VENEER LUMBER (MICROLLAM)	STIFF	STIFFENER
CONN	CONNECTION			STRUC	STRUCTURAL
CONST	CONSTRUCTION	LSL	LAMINATED STRAND LUMBER (TIMBERSTRAND)	SYM	SYMMETRICAL
CS	CRIPPLE STUD			T&B	TOP AND BOTTOM
CTR	CENTER	MAINT	MAINTENANCE	T&G	TONGUE AND GROOVE
CTSK	COUNTERSUNK	MAS	MASONRY	T.O.	TOP OF
CY	CUBIC YARDS	MAX	MAXIMUM	TN	TOE NAIL
DBL	DOUBLE	MB	MACHINE BOLT	TYP	TYPICAL
DF	DOUGLAS FIR	MECH	MECHANICAL	UNO	UNLESS NOTED OTHERWISE
DIA	DIAMETER	MFR	MANUFACTURER	VERT. (V)	VERTICAL
DJ	DOWELED JOINT	MIN	MINIMUM	W/	WITH
DO	DITTO	MISC	MISCELLANEOUS	W/O	WITHOUT
DWG	DRAWING	MTL	METAL	WF	WIDE FLANGE
EA	EACH	(N)	NEW	WWF	WELDED WIRE FABRIC
EF	EACH FACE	NA	NOT APPLICABLE	#	NUMBER, POUNDS
EL, ELEV	ELEVATION	NS	NEAR SIDE	±	PLUS OR MINUS
ELEC	ELECTRICAL	NTS	NOT TO SCALE	Φ	DIAMETER, ROUND
EN	EDGE NAILING			&	AND
ES	EACH SIDE			@	AT
EXIST, (E)	EXISTING				

DRAWING NOTES

THE FOLLOWING NOTES SHALL BE CONSIDERED A PART OF EACH RESPECTIVE DRAWING

1. IT SHALL BE THE CONTRACTORS DIRECT RESPONSIBILITY TO COMPLY WITH TYPICAL DETAILS AND GENERAL NOTES AS DELINEATED OR DEFINED ON THE TYPICAL DETAIL DRAWINGS OF THESE CONTRACT DOCUMENTS REGARDLESS OF SPECIFIC FLAGGING OR REFERENCE TO APPLICABLE NOTE OR DETAIL.
2. DO NOT SCALE DRAWINGS. DRAWINGS ARE DIAGRAMMATIC AND MAY NOT SCALE ACCURATELY. ANY DIMENSIONAL OMISSIONS OR DISCREPANCIES SHALL BE BROUGHT TO THE ATTENTION OF THE ARCHITECT IMMEDIATELY.
3. CONTRACTOR TO VERIFY AND COORDINATE ALL LOCATIONS AND SIZES OF OPENINGS IN SLABS, SLAB DEPRESSIONS, AND CURBS FOR ALL RELATED CONSTRUCTION PRIOR TO LAYOUT OR CONSTRUCTION. CONTRACTOR SHALL THEN USE APPROPRIATE DETAIL(S) OR APPROPRIATE WALL SECTION FOR EACH APPLICABLE CONDITION.
4. DRAWINGS ARE DIAGRAMMATIC IN NATURE AND MAY NOT INDICATE EVERY MECHANICAL UNIT, OPENING OR PENETRATION. THE CONTRACTOR SHALL COORDINATE AND VERIFY LOCATION AND SIZE OF ALL SUCH UNITS, OPENINGS AND PENETRATIONS WITH RELATED SUB-CONTRACTORS PRIOR TO FRAMING LAYOUT OR CONSTRUCTION. CONTRACTOR SHALL THEN USE APPROPRIATE TYPICAL OR REFERENCED DETAIL(S) FOR EACH UNIT, OPENING OR PENETRATION.
5. CONTRACTOR TO VERIFY WITH APPROPRIATE SUB-CONTRACTORS THE EXACT LOCATION, WEIGHT, AND INTENDED METHOD OF ATTACHMENT OF ALL ITEMS TO BE SUSPENDED FROM OR IN ANY WAY ATTACHED TO ANY STRUCTURAL MEMBER UNLESS SUCH ITEM(S) ARE CLEARLY ADDRESSED BY THE STRUCTURAL CONSTRUCTION DOCUMENTS. THIS INFORMATION SHALL BE TRANSMITTED IN WRITING BY THE APPROPRIATE SUB-CONTRACTOR TO THE CONTRACTOR AND THE ARCHITECT FOR APPROVAL PRIOR TO FINAL DESIGN, FABRICATION AND INSTALLATION.
6. CONTRACTOR TO VERIFY ALL EXISTING CONDITIONS AND DIMENSIONS PRIOR TO CONSTRUCTION AND NOTIFY THE ARCHITECT IN WRITING OF ANY DISCREPANCIES.
7. IT SHALL BE THE CONTRACTOR'S DIRECT RESPONSIBILITY TO COORDINATE WITH ALL TRADES REGARDING UTILITIES PASSING THROUGH OR UNDER FOUNDATIONS. WHERE ALLOWED, STRUCTURAL REQUIREMENTS FOR THESE CONDITIONS ARE DELINEATED IN TYPICAL DETAILS.

BASIS OF DESIGN

CODE REFERENCE: 2012 INTERNATIONAL BUILDING CODE
RISK CATEGORY II

LIVE LOADS	
Floor Live Load	250 psf
2nd Floor Live Load	50 psf
Ground Snow Load, S	30 psf
Roof Snow Load, S	21 psf

WIND LOADS	
Basic Wind Speed, Vult	130mph
Exposure	C

SOILS	
Soils Engineer	Terracon Consultants
Maximum Allowable Soil Bearing	2,500 psf w/ 1/3 Increase for Wind & Seismic
Coefficient of Friction	0.30
Active Pressure	35 pcf w/ free draining backfill
At Rest Pressure	55 pcf
Passive Pressure	315 pcf
Frost Depth	24"

SEISMIC LOADS	
Seismic Use Group	II
Site Class	D
Ie	1.0
Ss	2.332
S1	0.811
Sds	1.555
Sd1	0.811
Seismic Design Category	D
Analysis Procedure Used	Equivalent Lateral Force Procedure
Basic Seismic Force Resisting System(s)	Ordinary Steel Moment Frames (R=3.5)
Seismic Base Shear, V = CsW	V = 0.311W (ASD)

PRE-FABRICATED METAL BUILDINGS	
Collateral Loads	10 psf
Collateral load is in addition to structural dead loads. Collateral loads shall not be used to resist wind or seismic uplift.	
Lateral Drift	
The maximum lateral drift of the main building frames shall be 0.005 times the highest eave height for wind or seismic uplift.	

PROJECT TITLE

STRUCTURAL DRAWINGS FOR

CARSON CITY FLEET MAINTENENCE FACILTY EXPANSION

CARSON CITY
NEVADA

GML ARCHITECTS · LLC
architects & planners
1575 DELUCCHI LN SUITE 120
RENO NEVADA 89502
P 775 829 8814
F 775 829 8828

PROFESSIONAL ENGINEER-CIVIL ROGER G. HYYTINEN STRUCTURAL No. 5795 NEVADA
EXP. 6/30/15 6/2/14

HEJ 57-13
HYYTINEN ENGINEERING
5458 Longley Lane, Suite B
Reno, Nevada 89511
Phone (775) 826-3019
Fax (775) 826-3076

GENERAL NOTES

I. GENERAL

A. THE FOLLOWING GENERAL NOTES APPLY TO ALL STRUCTURAL DRAWINGS UNLESS NOTED OTHERWISE.

B. ALL PHASES OF WORK SHALL CONFORM TO THE MINIMUM STANDARDS OF THE 2012 INTERNATIONAL BUILDING CODE AND THE LATEST EDITION OF ASTM OR OTHER INDUSTRY STANDARDS REFERENCED.

C. THE CONTRACT STRUCTURAL DRAWINGS AND SPECIFICATIONS REPRESENT THE FINISHED STRUCTURE UNLESS OTHERWISE INDICATED. THEY DO NOT INDICATE THE METHOD OF CONSTRUCTION. THE CONTRACTOR SHALL PROVIDE ALL MEASURES NECESSARY TO PROTECT THE STRUCTURE, WORKMEN, AND OTHER PERSONS DURING CONSTRUCTION. SUCH MEASURES SHALL INCLUDE, BUT NOT BE LIMITED TO, PREPARING AND FOLLOWING A WRITTEN SAFETY PROGRAM FOR THE CONSTRUCTION PROJECT, BRACING, SHORING FOR CONSTRUCTION EQUIPMENT, SHORING FOR THE BUILDING, FORMS AND SCAFFOLDING, AND ALL RETAINING WALLS. THE CONTRACTOR SHALL COMPLY WITH ALL OSHA REGULATIONS AND RETAIN HIS OWN ENGINEER WHERE REQUIRED.

D. IN THE EVENT THAT CERTAIN FEATURES OF CONSTRUCTION ARE NOT FULLY SHOWN ON THE DRAWINGS OR CALLED FOR IN THE NOTES OR SPECIFICATIONS, THEIR CONSTRUCTION SHALL BE OF THE SAME CHARACTER AS FOR SIMILAR CONDITIONS THAT ARE SHOWN OR CALLED FOR AND SHALL BE REVIEWED BY THE ARCHITECT.

E. IN THE EVENT THAT CERTAIN EXISTING CONDITIONS ARE FOUND TO BE DIFFERENT FROM THOSE SHOWN ON THE PLANS AND DETAILS, THE ARCHITECT SHALL BE IMMEDIATELY NOTIFIED SO THAT THE PROPER REVISIONS CAN BE MADE IF NECESSARY.

F. NO CHANGES OR DEVIATIONS FROM THE PLANS AND SPECIFICATIONS WILL BE ALLOWED WITHOUT WRITTEN AUTHORIZATION FROM THE ARCHITECT.

G. WHERE SHOP DRAWINGS ARE REQUIRED, THEY SHALL BE COMPLETE AND COORDINATED BY THE CONTRACTOR. REPRODUCTIONS OF CONTRACT DRAWINGS WILL NOT BE ACCEPTABLE.

II. FOUNDATIONS

A. LOCATION OF TEST HOLES AND LOGS THEREOF ARE SHOWN IN THE SOIL REPORT, PREPARED BY TERRACON CONSULTANTS.

B. THE SOILS ENGINEER SHALL REVIEW ALL SITEWORK AND FOOTING EXCAVATIONS BEFORE ANY CONCRETE IS CAST AND SUBMIT A LETTER OF COMPLIANCE TO THE ARCHITECT INDICATING THAT ALL WORK IS IN ACCORDANCE WITH THE CONTRACT DOCUMENTS.

C. THE SOILS ENGINEER SHALL REVIEW ALL BACKFILL MATERIALS PRIOR TO PLACEMENT, OBSERVE BACKFILL OPERATIONS AND SUBMIT A LETTER OF COMPLIANCE TO THE ARCHITECT INDICATING THAT ALL WORK IS IN ACCORDANCE WITH THE CONTRACT DOCUMENTS.

D. STRUCTURAL FILL, EITHER IMPORTED OR NATIVE, SHALL BE APPROVED PRIOR TO USE, AND SHALL BE REASONABLY WELL GRADED, FREE OF ORGANICS, WITH 100% PASSING THE 4" SIEVE, 70% TO 100% PASSING THE ½" SIEVE, 35% TO 100% PASSING THE #4 SIEVE AND 0% TO 35% PASSING THE #200 SIEVE. THE LIQUID LIMIT SHALL NOT EXCEED 35 AND THE PLASTIC INDEX SHALL NOT EXCEED 15.

E. STRIP SITE AS REQUIRED FOR IMPROVEMENTS. CLEAR ALL EXISTING STRUCTURES, DEBRIS, PAVING AND ORGANICS. THE CONTRACTOR SHALL TAKE CARE TO LOCATE ALL UTILITIES PRIOR TO CONSTRUCTION AND AVOID OR RE-LOCATE UTILITIES AS REQUIRED.

F. EXCAVATE AND OVEREXCAVATE AS NECESSARY AND AS DETAILED TO PROPERLY CONSTRUCT IMPROVEMENTS. THIS INCLUDES THE REMOVAL OF ALL EXISTING UNCONTROLLED FILL.

G. SCARIFY, MOISTURE CONDITION, AND RE-COMPACT FOOTING SUB-GRADES TO A DEPTH OF 8" TO 90% RELATIVE COMPACTION. PLACE FILL AND BACKFILL IN UNIFORM HORIZONTAL LIFTS OF 6" COMPACTED THICKNESS, MOISTURE CONDITION AND COMPACT TO 95% RELATIVE COMPACTION BELOW IMPROVEMENTS AND TO 90% RELATIVE COMPACTION OUTSIDE OF IMPROVEMENTS.

H. FOOTINGS SHALL BEAR NOT LESS THAN 24" BELOW FINISH GRADE.

I. FOOTINGS MAY BE POURED IN NEAT EXCAVATION WHERE POSSIBLE, PROVIDED AN EXTRA 1" WIDTH OF FOOTING IS PROVIDED ON EACH SIDE AND WRITTEN APPROVAL IS GIVEN BY THE ARCHITECT.

J. ALL FOOTING EXCAVATIONS SHALL BE HAND CLEANED PRIOR TO PLACING CONCRETE.

K. CONCRETE SLABS, STEPS AND FLATWORK SHALL BE PLACED OVER 6" COMPACT, TYPE II AGGREGATE BASE. COMPACT AGGREGATE BASE TO 95% RELATIVE COMPACTION. INTERIOR CONCRETE SLABS SHALL HAVE A 15 MIL VAPOR BARRIER BELOW THE BASE WHERE SHOWN.

L. TRENCHING AND BACKFILL FOR UTILITIES SHALL COMPLY WITH THE REQUIREMENTS OF THE AUTHORITIES HAVING JURISDICTION AND WITH ALL BEST INDUSTRY PRACTICES.

III. CONCRETE

ALL CONCRETE WORK SHALL CONFORM TO THE REQUIREMENTS OF THE ACI MANUAL OF CONCRETE PRACTICE.

B. CONCRETE AT FOUNDATIONS OR WALLS IN CONTACT WITH SOILS SHALL HAVE A MINIMUM COMPRESSIVE STRENGTH OF 3000 PSI AT 28 DAYS. SHALL HAVE A MAXIMUM WATER TO CEMENT RATION OF 0.50, AND SHALL HAVE AN ENTRAPPED AIR CONTENT OF 1% TO 3%.

C. CONCRETE AT INTERIOR SLABS ON GRADE OR WALLS SHALL HAVE A MINIMUM COMPRESSIVE STRENGTH OF 4000 PSI AT 28 DAYS, SHALL HAVE A MAXIMUM WATER TO CEMENT RATIO OF 0.45, SHALL HAVE AN AIR CONTENT OF 3% TO 5%, AND SHALL CONTAIN 1.5 LB/CY OF FIBERMESH STEALTH POLYPROPYLENE FIBERS OR APPROVED EQUAL.

D. EXTERIOR CONCRETE SHALL HAVE A MINIMUM COMPRESSIVE STRENGTH OF 4000 PSI AT 28 DAYS, SHALL HAVE A MAXIMUM WATER TO CEMENT RATIO OF 0.45, SHALL HAVE AN ENTRAINED AIR CONTENT OF 5% TO 7%, AND SHALL CONTAIN 1.5 LB/CY OF FIBERMESH STEALTH POLYPROPYLENE FIBERS OR APPROVED EQUAL.

E. ALL CONCRETE MIXES SHALL UTILIZE TYPE II OR TYPE I+P LOW ALKALI CEMENT CONFORMING TO ASTM C150. HARDROCK AGGREGATE SHALL CONFORM TO ASTM C33. LIGHT WEIGHT AGGREGATE SHALL CONFORM TO ASTM C330. COURSE AGGREGATE GRADATION SHALL MEET THE REQUIREMENTS OF SIZE NO. 67 UNLESS NOTED OTHERWISE.

F. CONCRETE SLUMP SHALL NOT EXCEED 3" WHEN TESTED IN ACCORDANCE WITH ASTM C143 FOR FOOTINGS AND SLABS, OR 4" FOR CAST-IN-PLACE WALLS. SLUMP INDICATED IS WITH WATER ONLY. ADDITIONAL SLUMP IS ACCEPTABLE IF ADDED BY MEANS OF APPROVED ADDITIVES THAT DO NOT INCREASE SHRINKAGE OR ADVERSELY AFFECT THE CONCRETE.

G. NON-SHRINK GROUT OR DRY PACK SHALL BE A PREMIXED, NONMETALLIC FORMULA WITH A MINIMUM COMPRESSIVE STRENGTH OF 7000 PSI AT 28 DAYS AND HAVING THE FOLLOWING CHARACTERISTICS: NO SHRINKAGE AFTER PLACEMENT OR EXPANSION AFTER SET (ASTM C1090), ONE DAY COMPRESSIVE STRENGTH OF AT LAST 3000 PSI (ASTM C109) AND INITIAL SET TIME OF NOT LESS THAN 45 MINUTES (ASTM C191). PROVIDE "HI-FLOW GROUT" OR "DRY PACK GROUT" BY EUCLID, OR AN APPROVED EQUAL.

H. REINFORCING SHALL BE DEFORMED BARS CONFORMING TO ASTM A615, GRADE 60. ALL REINFORCING TO BE WELDED OR FIELD BENT SHALL CONFORM TO ASTM A706. SUPPORTS AND ACCESSORIES SHALL BE FURNISHED AS SHOWN OR REQUIRED. CHAIRS PLACED AGAINST EXPOSED SURFACES SHALL BE GALVANIZED OR PROVIDED WITH PLASTIC FEET.

I. WELDED WIRE FABRIC (WWF) WITH PLAIN REINFORCING WIRE SHALL CONFORM TO ASTM A185. STRUCTURAL WELDED WIRE REINFORCING (SWWR) WITH DEFORMED REINFORCING WIRE SHALL CONFORM TO ASTM A497. WWF AND SWWR SHALL HAVE WIRE SIZES AND SPACINGS AS INDICATED ON PLANS AND DETAILS. LAP SHEETS IN ACCORDANCE WITH ACI AND CRSI RECOMMENDATIONS.

J. MINIMUM COVERAGE FOR REINFORCING SHALL BE THE CLEAR DISTANCE TO THE FACE OF BARS AS FOLLOWS: 3" WHEN CONCRETE IS POURED AGAINST EARTH; 1-1/2" FOR #5 AND SMALLER BARS FROM FORMED SURFACES EXPOSED TO GROUND OR WEATHER, 2" FOR #6 AND LARGER BARS.

K. ALL REINFORCING STEEL, INCLUDING MESH AT SLABS, SHALL BE ACCURATELY POSITIONED AND SECURED IN PLACE WITH CHAIRS, TIES, BOLSTERS OR DOBIES PRIOR TO PLACEMENT OF CONCRETE AS RECOMMENDED IN THE CRSI MANUAL OF STANDARD PRACTICE.

L. SPLICES IN REINFORCEMENT SHALL NOT BE MADE AT OR NEAR POINTS OF MAXIMUM STRESS. SPLICES SHALL BE LAPPED NOT LESS THAN 48 DIAMETERS. IN NO CASE SHALL A SPLICE BE LESS THAN 18".

M. CONCRETE FORMWORK SHALL CONFORM TO ACI 347. CLEAN AND ROUGHEN CONSTRUCTION JOINTS AND LIGHTLY MOISTEN FORMS AND SUBGRADE PRIOR TO PLACEMENT OF CONCRETE. INSTALL W.R. MEADOWS, INC. "SEALTIGHT DUOGARD" CHEMICAL RELEASE AGENT OR APPROVED EQUAL PRIOR TO PLACEMENT OF CONCRETE. PLACE CONCRETE USING METHODS WHICH AVOID SEGREGATION. MECHANICALLY VIBRATE ALL CONCRETE, INCLUDING FLOOR SLABS, TO CONSOLIDATE IT IN FORMS.

N. FINISH CONCRETE AS FOLLOWS UNLESS NOTED OTHERWISE: INTERIOR FLATWORK SHALL RECEIVE A STEEL TROWELED FINISH. EXTERIOR FLATWORK SHALL RECEIVE A MEDIUM BROOM FINISH PERPENDICULAR TO TRAFFIC. SACK AND PATCH FORMED CONCRETE EXPOSED TO VIEW FOR A SMOOTH FINISH. PATCH LARGE HOLES OR DEFECTS AT FORMED CONCRETE NOT EXPOSED TO VIEW. FRESHLY PLACED CONCRETE SHALL BE CURED AND PROTECTED FROM THE WEATHER IN ACCORDANCE WITH ACI 305 IN HOT WEATHER AND ACI 306 IN COLD WEATHER.

P. CONSTRUCTION JOINTS WILL NOT BE PERMITTED, EXCEPT AS SHOWN ON THE DRAWINGS, WITHOUT WRITTEN CONSENT OF THE ARCHITECT.

Q. SEE ARCHITECTURAL DRAWINGS FOR SPECIAL JOINT LAYOUT, DEPRESSIONS, AND REQUIREMENTS AT EXPOSED CONCRETE FINISH LOCATIONS. AT SLABS ON GRADE, CONTRACTOR SHALL SUBMIT JOINT LAYOUT SHOP DRAWINGS TO THE ARCHITECT FOR REVIEW AND APPROVAL PRIOR TO POURING SLABS.

R. CONCRETE MIX DESIGNS IN ACCORDANCE WITH ASTM C94 SHALL BE SUBMITTED TO THE ARCHITECT FOR APPROVAL PRIOR TO PLACEMENT OF ANY CONCRETE. SHOP DRAWINGS OF REINFORCING STEEL SHALL BE SUBMITTED TO THE ARCHITECT FOR APPROVAL PRIOR TO ANY FABRICAITON.

IV. STRUCTURAL STEEL

A. ALL STRUCTURAL STEEL WORK SHALL CONFORM TO THE REQUIREMENTS OF THE AISC MANUAL OF STEEL CONSTRUCTION.

B. ALL STRUCTURAL STEEL SHALL CONFORM TO ASTM A36, UNLESS NOTED OTHERWISE. W SHAPES SHALL CONFORM TO ASTM A992. PIPE SHALL CONFORM TO ASTM A53, GRADE B. HOLLOW STRUCTURAL SECTIONS (HSS) SHALL CONFORM TO ASTM A500, GRADE B.

C. ANCHOR BOLTS (AB) SHALL CONFORM TO ASTM F1554, GRADE 36, UNLESS NOTED OTHERWISE. MACHINE BOLTS (MB) SHALL CONFORM AT ASTM A307, HIGH STRENGTH BOLTS (HSB) SHALL BE ASTM A325 OR A490 AS NOTED AND SHALL CONFORM TO THE REQUIREMENTS OF THE "AISC SPECIFICATIONS FOR STRUCTURAL JOINTS USING ASTM A325 OR A490 BOLTS". CONTACT FACES OF STEEL AT CONNECTIONS WHERE HIGH STRENGTH BOLTS ARE USED SHALL NOT BE PAINTED. UNLESS NOTED OTHERWISE, HIGH STRENGTH BOLTS SHALL BE TENSION CONTROL TO ENSURE PROPER INSTALLATION.

D. HEADED STUDS SHALL BE NELSON STUD ANCHORS (NSA) BY TRW OR APPROVED EQUAL, AND SHALL BE INSTALLED PER MANUFACTURERS REQUIREMENTS.

E. ALL WELDING SHALL CONFORM TO THE AMERICAN WELDING SOCIETY'S SPECIFICATIONS FOR THE MATERIAL BEING WELDED. ALL WELDING SHALL BE PERFORMED ONLY BY AWS CERTIFIED WELDERS.

F. ALL STRUCTURAL STEEL WORK SHALL BE SHOP PAINTED AND TOUCHED UP IN THE FIELD AFTER ERECTION EXCEPT WHERE STEEL IS TO BE EMBEDDED IN CONCRETE, OR WHERE REQUIRED FOR SPECIAL CONNECTIONS. PROVIDE 3" MINIMUM CONCRETE COVER FOR ALL STEEL EXPOSED TO EARTH.

G. SHOP DRAWINGS OF ALL STRUCTURAL STEEL SHALL BE SUBMITTED TO THE ARCHITECT FOR APPROVAL PRIOR TO ANY FABRICATION.

V. COLD-FORMED STEEL FRAMING

A. ALL COLD-FORMED STEEL FRAMING SHALL BE MANUFACTURED BY CURRENT MEMBERS OF THE STEEL STUD MANUFACTURER'S ASSOCIATION (SSMA) AND SHALL BE OF THE MINIMUM TYPES AND SIZES INDICATED ON THE DRAWINGS.

B. ALL MEMBERS 16 GAUGE AND HEAVIER SHALL BE FORMED FROM STEEL CONFORMING TO ASTM A653, GRADE 50. ALL MEMBERS 18 GAUGE AND LIGHTER SHALL BE FORMED FROM STEEL CONFORMING TO ASTM A653, GRADE 33. ALL MEMBERS SHALL BE GALVANIZED WITH A G-60 COATING MEETING THE REQUIREMENTS OF ASTM A924.

C. PROVIDE ALL ACCESSORIES INCLUDING, BUT NOT LIMITED TO, TRACKS, CLIPS, WEB STIFFENERS, ANCHORS, FASTENING DEVICES, RESILIENT CLIPS, BRIDGING, AND OTHER ACCESSORIES REQUIRED FOR A COMPLETE AND PROPER INSTALLATION, AND AS RECOMMENDED BY THE MANUFACTURER FOR THE STEEL MEMBERS USED.

D. FASTENING OF COMPONENTS SHALL BE BY SELF-DRILLING SCREWS OR BY WELDING. WIRE TYING OF COMPONENTS WILL NOT BE ALLOWED. SCREWS OR WELDS SHALL BE OF SUFFICIENT SIZE TO INSURE THE STRENGTH OF THE CONNECTION. WELDING SHALL BE PERFORMED BY AWS CERTIFIED WELDERS EXPERIENCED IN WELDING OF SHEET METAL. ALL WELDS OF GALVANIZED STEEL SHALL BE TOUCHED UP WITH A ZINC-RICH PAINT.

E. ALL FRAMING COMPONENTS SHALL BE CUT FOR TIGHT FIT AGAINST ABUTTING MEMBERS AND SHALL BE PLUMBED, ALIGNED, AND SECURELY ATTACHED TO PREVENT ROTATION, TWISTING OR ANY OTHER DISPLACEMENT.

F. SHOP DRAWINGS SHALL BE SUBMITTED TO THE ARCHITECT FOR REVIEW PRIOR TO ANY FABRICATION OR INSTALLATION OF WALL FRAMING. SHOP DRAWINGS SHALL INCLUDE DETAILS TO BE USED AND FRAMING ELEVATIONS SHOWING THE LAYOUT OF ALL STEEL STUD FRAMING MEMBERS AS WELL AS ADDITIONAL STRUCTURAL STEEL FRAMING REQUIRED FOR THE SUPPORT OF WALL SYSTEMS.

VI. WOOD FRAMING

A. FRAMING LUMBER USED IN FLEXURE SHALL BE DOUGLAS FIR NO. 2 FOR 2X10 AND SMALLER AND DOUGLAS FIR NO. 1 FOR MEMBERS LARGER THAN 2X10. STRUCTURAL WALLS STUDS SHALL BE DOUGLAS FIR NO 2. WOOD POSTS SHALL BE DOUGLAS FIR NO. 1.

B. PLATES, BRIDGING, AND BLOCKING SHALL BE DOUGLAS FIR NO. 2 MINIMUM.

C. PLATES ATTACHED TO CONCRETE OR MASONRY AT GRADE SHALL BE PRESSURE TREATED AND CONNECTORS FOR PRESSURE TREATED LUMBER SHALL BE GALVANIZED OR STAINLESS.

D. FRAMING LUMBER MOISTURE CONTENT AT THE TIME OF DELIVERY TO THE JOB SHALL NOT EXCEED 19% BY WEIGHT.

E. SHEATHING SHALL BE APA APPROVED PLYWOOD OR OSB OF THE GRADES AND SIZES SHOWN ON THE DRAWINGS. OSB SHALL NOT BE USED IN CONDITIONS WITH EXTERIOR EXPOSURE.

F. NAILING SHALL BE IN ACCORDANCE WITH 2012 IBC TABLE 2304.9.1 FASTENING SCHEDULE WHERE NOT OTHERWISE SHOWN ON DRAWINGS.

G. BOLTS SHALL CONFORM TO ASTM A307 WITH STANDARD CUT WASHERS WHERE HEAD OR NUT BEARS ON WOOD.

H. FRAMING ANCHORS, STRAPS, CONNECTIONS, HANGERS, ETC., SHALL BE SIMPSON STRONG TIE, SILVER OR EQUAL HAVING ICC APPROVAL; PREDRILL NAIL HOLES AS REQUIRED TO AVOID SPLITTING. ALL HANGERS AND CONNECTIONS SHALL BE NAILED FOR MAXIMUM CAPACITY.

VII. GLUE LAMINATED BEAMS

A. ALL BEAMS SHALL BE DOUGLAS FIR COMBINATION 24F-V4 AT SIMPLE SPANS; 24F-V8 WHERE CONTINUOUS OVER SUPPORTS, OF ARCHITECTURAL APPEARANCE GRADE WHERE EXPOSED AND INDUSTRIAL APPEARANCE GRADE WHERE CONCEALED.

B. BEAMS SHALL BE MANUFACTURED IN ACCORDANCE WITH AITC 117.

C. LAMINATED BEAMS SHALL BE GLUED WITH EXTERIOR GLUE.

D. MOISTURE CONTENT AT THE TIME OF LAMINATION SHALL NOT EXCEED 12%.

E. BEAMS SHALL BE CAMBERED AS SHOWN ON THE DRAWINGS. WHERE NO CAMBER IS INDICATED, SIMPLE SPAN BEAMS SHALL BE PROVIDED WITH 2000' RADIUS UPWARD CAMBER.

F. ALL BEAMS EXPOSED TO WEATHER SHALL BE PRESSURE TREATED AND SHALL HAVE THEIR ENDS SEALED FOLLOWING PRESERVATIVE TREATMENT. OTHER BEAMS NOT EXPOSED TO THE WEATHER SHALL HAVE THEIR ENDS SEALED AFTER MANUFACTURE.

G. SHOP DRAWINGS OF ALL STRUCTURAL GLUED LAMINATED BEAMS SHALL BE SUBMITTED TO THE ARCHITECT FOR APPROVAL PRIOR TO ANY FABRICATION.

VIII. MANUFACTURED LUMBER PRODUCTS

A. PARALLEL STRAND LUMBER (PSL) SHALL BE 2.0E PARALLAM BY TRUSJOIST CORPORATION OR APPROVED EQUAL.

B. LAMINATED VENEER LUMBER (LVL) SHALL BE 1.9E MICROLLAM BY TRUSJOIST CORPORATION OR APPROVED EQUAL.

C. LAMINATED STRAND LUMBER (LSL) SHALL BE 1.6E TIMBERSTRAND BYTRUSJOIST CORPORATION OR APPROVED EQUAL.

D. FACTORY FABRICATED WOOD CHORD JOISTS WITH PLYWOOD OR ROD WEBS SHALL BE OF THE TYPES AND SIZES INDICATED ON THE DRAWINGS BY TRUSJOIST CORPORATION OR APPROVED EQUAL.

E. SHOP DRAWINGS OF ALL MANUFACTURED LUMBER PRODUCTS SHALL BE SUBMITTED TO THE ARCHITECT FOR APPROVAL PRIOR TO ANY FABRICATION.

IX. METAL PLATE CONNECTED WOOD TRUSSES

A. FACTORY FABRICATED METAL PLATE CONNECTED WOOD TRUSSES SHALL BE DESIGNED IN ACCORDANCE WITH ANSI / TPI 1 FOR THE FOLLOWING LOADS. SHOP DRAWINGS BEARING THE SEAL OF A PROFESSIONAL ENGINEER REGISTERED IN THE STATE OF NEVADA SHALL BE SUBMITTED TO THE ARCHITECT FOR APPROVAL PRIOR TO ANY FABRICATION. SHOP DRAWINGS SHALL ALSO INCLUDE THE MANUFACTURER'S INSTALLATION INSTRUCTIONS ON LATERAL BRACING AND ALL REQUIRED HANGERS.

B. DESIGN TRUSSES FOR THE FOLLOWING LOADS: DEAD LOAD = 10 PSF TOP CHORD, 10 PSF BOTTOM CHORD: NO MORE THAN 10 PSF TOTAL DEAD LOAD SHALL BE USED TO RESIST WIND UPLIFT LOADING; LIVE LOAD = 30 PSF TOP CHORD (SNOW), 10 PSF BOTTOM CHORD (NON-CONCURRENT WITH SNOW). TRUSSES SHALL BE DESIGNED FOR COMPONENT AND CLADDING WIND FORCES; SEE BASIS OF DESIGN FOR ADDITIONAL INFORMATION. NO STRESS INCREASES SHALL BE ALLOWED FOR REPETITIVE MEMBERS.

C. LIMIT TRUSS DEFLECTIONS TO L/360 FOR LIVE LOADS AND L/240 FOR TOTAL LOADS.

D. SEE DRAWINGS FOR TRUSS CONFIGURATIONS. DIAGONAL WEB MEMBERS MAY BE LOCATED PER THE TRUSS FABRICATOR'S REQUIREMENTS, HOWEVER, WHERE DIFFERENT TRUSS TYPES ARE LOCATED IN A SINGLE RUN, WEB MEMBERS AND PANEL POINTS SHALL LINE UP SO THAT A CLEAR PASSAGE IS MADE AVAILABLE FOR MECHANICAL DUCT WORK, ETC.

E. MINIMUM MEMBER SIZES SHALL BE 2X6 TOP CHORDS AND 2X4 FOR ALL OTHER MEMBERS. USE DOUG-FIR LARCH FOR TOP CHORD MEMBERS, USE DOUG-FIR LARCH OR HEM-FIR LUMBER OR BETTER FOR OTHER MEMBERS. USE "S-DRY" OR "KILN-DRY" LUMBER WITH 19% OR LESS MOISTURE CONTENT WHEN FABRICATED.

F. TRUSSES SHALL BE MARKED BY THE FABRICATOR AT LOCATIONS REQUIRING CONTINUOUS BRACING. CROSS BRACING SHALL BE FURNISHED AND INSTALLED AS INDICATED BY THE TRUSS MANUFACTURER AND AS SHOWN ON THESE DRAWINGS.

G. CONNECTORS BETWEEN TRUSS ELEMENTS ARE THE RESPONSIBILITY OF THE TRUSS MANUFACTURER.

H. CAMBER TRUSSES FOR TWO TIMES THE DEAD LOAD DEFLECTION.

X. PRE-ENGINEERED METAL BUILDING

A. THE PRE-ENGINEERED METAL BUILDING SYSTEM SHALL BE DESIGNED BY THE METAL BUILDING MANUFACTURER FOR THE DESIGN LOADS AND ALLOWABLE FRAME DRIFTS SHOWN ON THE DRAWINGS.

B. THE METAL BUILDING SYSTEM SHALL BE COORDINATED WITH THE SPECIFICATIONS AND DRAWINGS TO ENSURE PROPER COORDINATION OF THE BUILDING

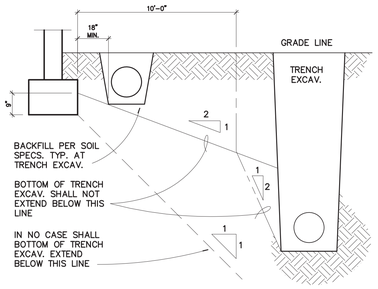

NOTE:
THE CONTRACTOR SHALL COORDINATE ALL EXCAVATION OPERATIONS WITH BUILDING FOUNDATION REQUIREMENTS.

EXCAVATION PARALLEL TO FOOTING
N.T.S.
1 / S2

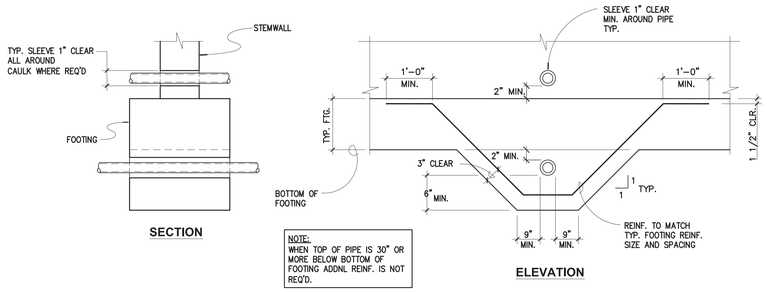

NOTE:
WHEN TOP OF PIPE IS 30" OR MORE BELOW BOTTOM OF FOOTING ADDNL REINF. IS NOT REQ'D.

TYPICAL PIPE ENTRANCE
N.T.S.
2 / S2

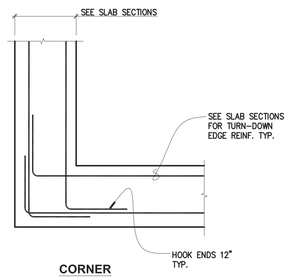

TYP. REINFORCEMENT LAP IN SLAB TURN-DOWN EDGE
N.T.S.
3 / S2

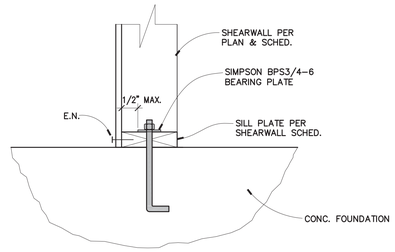

TYPICAL ANCHOR BOLT & BEARING PLATE
N.T.S.
4 / S2

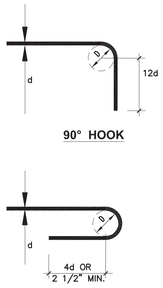

D = 6d FOR #3 TO #8
D = 8d FOR #9 TO #11
D = 10d FOR #14 AND #18

NOTES:
1. ALL BENDS SHALL BE MADE COLD.
2. #14 AND #18 BARS SHALL BE BEND TESTED AND LAB APPROVED PRIOR TO BENDING.

HOOKS AND BENDS FOR PRINCIPAL REINFORCING
N.T.S.
5 / S2

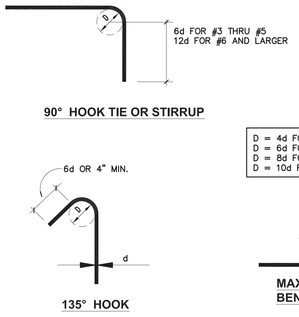

D = 4d FOR #5 AND SMALLER
D = 6d FOR #6 TO #8
D = 8d FOR #9 TO #11
D = 10d FOR #14 AND #18

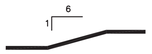

MAX. OFFSET BEND

TIE AND STIRRUP HOOKS
N.T.S.
6 / S2

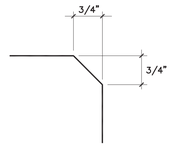

NOTE: CHAMFER ALL EXPOSED CORNERS OF CONCRETE WALLS, COLUMNS, BEAMS, ETC., EXCEPT WHERE DETAILED OTHERWISE.

TYPICAL CONCRETE CHAMFER
N.T.S.
7 / S2

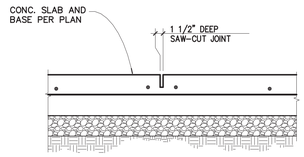

TYPICAL SLAB CONTROL JOINT (C.J.) AT 10'-0"± O.C.
N.T.S.
8 / S2

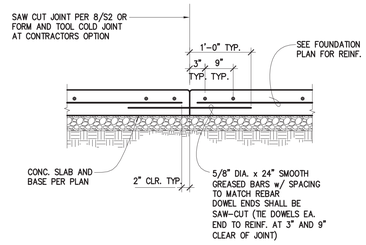

TYPICAL DOWELED CONSTRUCTION JOINT (D.J.) AT 20'-0"± O.C.
N.T.S.
9 / S2

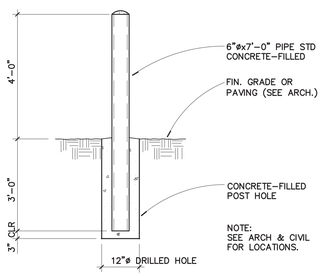

TYPICAL PIPE BOLLARD
N.T.S.
10 / S2

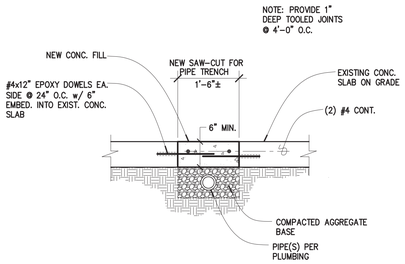

TYP. DRAIN TRENCH REPAIR
N.T.S
11 / S2

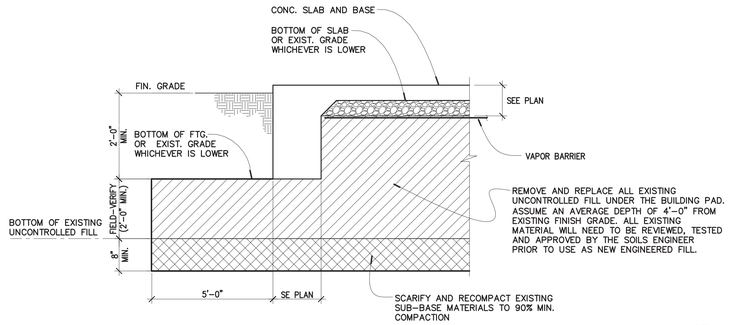

TYP. ENGINEERED FILL
N.T.S.
12 / S2

GML ARCHITECTS · LLC
architects & planners
1575 DELUCCHI LN SUITE 120
RENO NEVADA 89502
P 775 829 8814
F 775 829 8828

REGISTERED PROFESSIONAL ENGINEER ROGER G. HYYTINEN CIVIL & STRUCTURAL No. 5799 STATE OF NEVADA
EXP. 6/30/15 6/2/14

HYYTINEN ENGINEERING
5458 Longley Lane, Suite B
Reno, Nevada 89511
Phone (775) 826-3019
Fax (775) 826-3076
HE # 57-13

CARSON CITY FLEET MAINTENANCE FACILITY EXPANSION

CARSON CITY, NEVADA

DATE	6-2-14
JOB NO	796
DRAWN	A.M.
CHECKED	R.H.

⚠ BUILDING DEPARTMENT COMMENTS 4/24/14

TYPICAL FOUNDATION DETAILS

S2

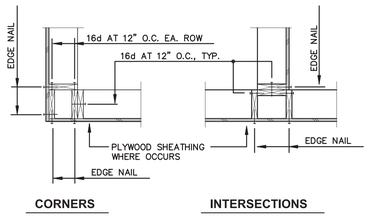

TYPICAL STUD WALL CONN.

NO SCALE

1 / S3

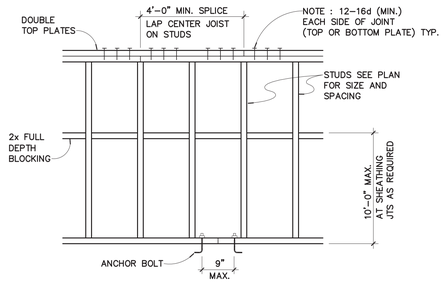

TYP. STUD BEARING WALL

NO SCALE

2 / S3

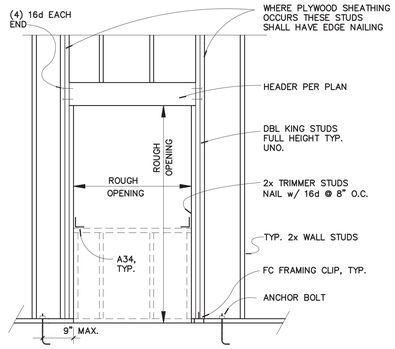

TYPICAL OPENING FRAMING

NO SCALE

3 / S3

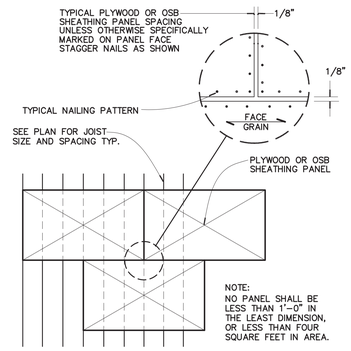

TYPICAL SHEATHING SPACING & NAILING PATTERN

NO SCALE

4 / S3

NAILING SCHEDULE		
CONNECTION	FASTENING	LOCATION
1) JOIST TO SILL OR GIRDER	(3) 8d COMMON	TOENAIL
2) BRIDGING TO JOIST	(2) 8d COMMON	TOENAIL EA. END
3) 1x6 SUBFLOOR OR LESS TO EACH JOIST	(2) 8d COMMON	FACE NAIL
4) WIDER THAN 1x6 SUBFLOOR TO EACH JOIST	(3) 8d COMMON	FACE NAIL
5) 2" SUBFLOOR TO JOIST OR GIRDER	(2) 16d COMMON	BLIND AND FACE NAIL
6) SOLE PLATE TO JOIST OR BLOCKING SOLE PLATE TO JOIST OR BLOCKING AT BRACED WALL PANEL	16d AT 16" O.C. (3) 16d AT 16" O.C.	TYPICAL FACE NAIL BRACED WALL PANELS
7) TOP PLATE TO STUD	(2) 16d COMMON	END NAIL
8) STUD TO SOLE PLATE.	(4) 8d COMMON (2) 16d COMMON	TOENAIL END NAIL
9) DOUBLE STUDS	16d AT 24" O.C.	FACE NAIL
10) DOUBLE TOP PLATES DOUBLE TOP PLATES	16d AT 16" O.C. (8) 16d COMMON	TYPICAL FACE NAIL LAP SPLICE
11) BLOCKING BETWEEN JOISTS OR RAFTERS TO TOP PLATE	(3) 8d COMMON	TOENAIL
12) RIM JOIST TO TOP PLATE	8d AT 6"	TOENAIL
13) TOP PLATES, LAPS AND INTERSECTIONS	(2) 16d COMMON	FACE NAIL
14) CONTINUOUS HEADER, TWO PIECES.	16d COMMON	16" O.C. ALONG EDGE
15) CEILING JOISTS TO PLATE	(3) 8d COMMON	TOENAIL
16) CONTINUOUS HEADER TO STUD	(4) 8d COMMON	TOENAIL
17) CEILING JOISTS , LAPS OVER PARTITIONS	(3) 16d COMMON MIN.	FACE NAIL
18) CEILING JOIST TO PARALLEL RAFTERS	(3) 16d COMMON MIN.	FACE NAIL
19) RAFTER TO PLATE	(3) 8d COMMON	TOENAIL
20) 1" BRACE TO EACH STUD AND PLATE	(2) 8d COMMON	FACE NAIL
21) 1x8 SHEATHING TO EACH BEARING	(3) 8d COMMON	FACE NAIL
22) WIDER THAN 1x8 SHEATHING TO EACH BEARING	(3) 8d COMMON	FACE NAIL
23) BUILT-UP CORNER STUDS	16d COMMON	24" O.C.
24) BUILT-UP GIRDER & BEAMS	20d COMMON AT 32" O.C. (2) 20d COMMON	FACE NAIL TOP AND BOTTOM STAGGERED ON OPPOSITE SIDES FACE NAIL AT ENDS AND AT EACH SPLICE
25) 2" PLANKS	(2) 16d COMMON	AT EACH BEARING
26) COLLAR TIE TO RAFTER	(3) 10d COMMON	FACE NAIL
27) JACK RAFTER TO HIP	(3) 10d COMMON (2) 16d COMMON	TOENAIL FACE NAIL
28) ROOF RAFTER TO 2x RIDGE BEAM	(2) 16d COMMON (2) 16d COMMON	TOENAIL FACE NAIL

5 / S3

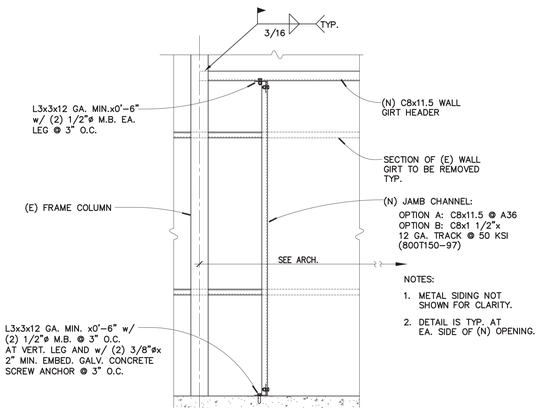

NOTES:

1. METAL SIDING NOT SHOWN FOR CLARITY.
2. DETAIL IS TYP. AT EA. SIDE OF (N) OPENING.

WALL CUT FOR NEW DOOR

N.T.S.

6 / S7

GML ARCHITECTS · LLC
architects & planners
1575 DELUCCHI LN SUITE 120
RENO NEVADA 89502
P 775 829 8814
F 775 829 8828

REGISTERED PROFESSIONAL ENGINEER ROGER G. HYYTINEN CIVIL & STRUCTURAL No. 5799 STATE OF NEVADA
EXP. 6/30/15 6/2/14

HYYTINEN ENGINEERING
5458 Longley Lane, Suite B
Reno, Nevada 89511
Phone (775) 826-3019
Fax (775) 826-3076
HE # 57-13

CARSON CITY FLEET MAINTENANCE FACILITY EXPANSION

CARSON CITY, NEVADA

DATE	6-2-14
JOB NO	796
DRAWN	A.M.
CHECKED	R.H.

1 BUILDING DEPARTMENT COMMENTS 4/24/14

TYPICAL WOOD FRAMING DETAILS

S3

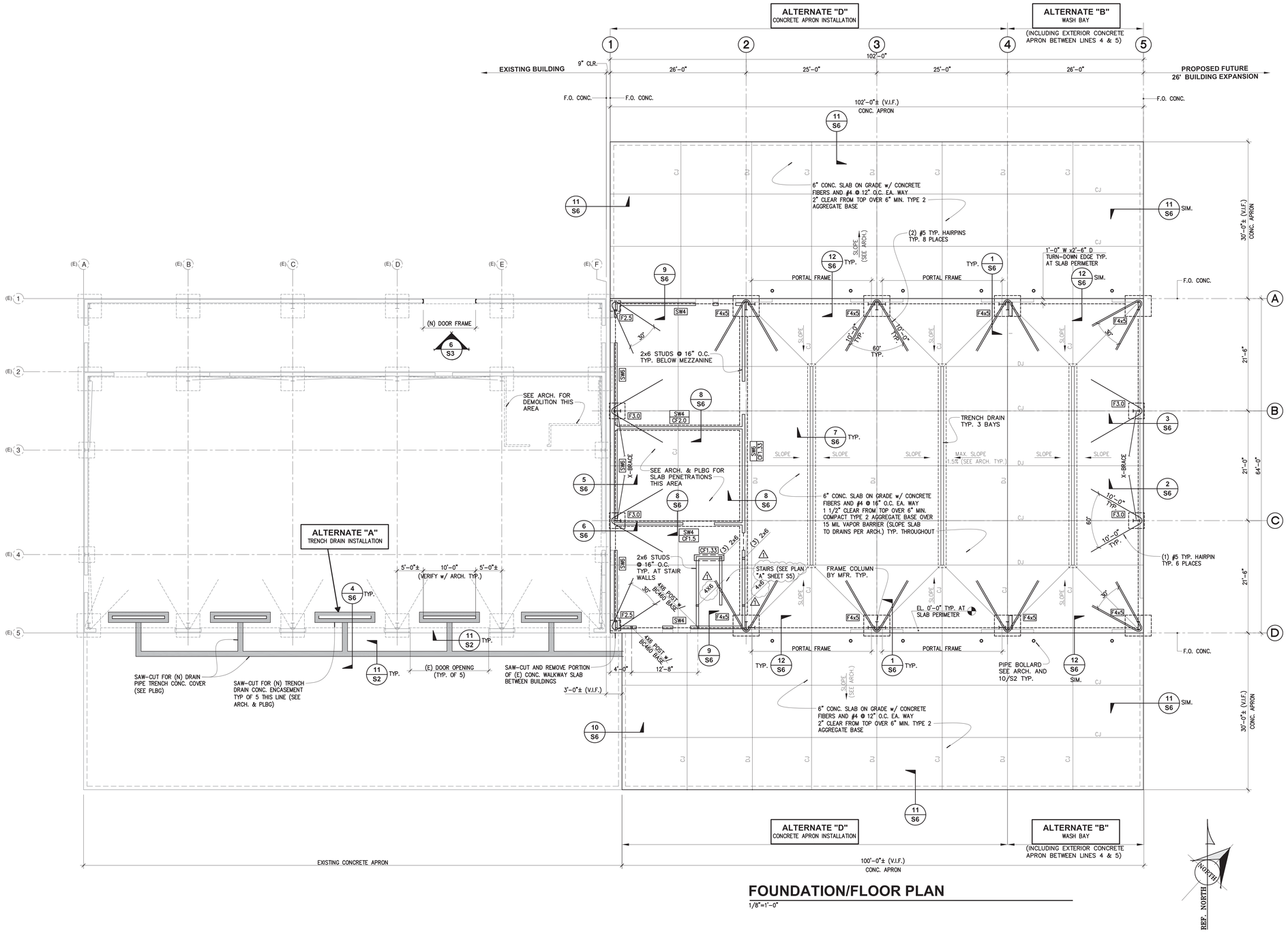

FOUNDATION/FLOOR PLAN

1/8"=1'-0"

FOOTING SCHEDULE

MARK	SIZE	REINFORCEMENT
F2.5	2'-6" SQ. x 12" MIN.	(3) #4 EA. WAY BOT.
F3.0	3'-0" SQ. x 12" MIN.	(4) #4 EA. WAY BOT.
F4x5	4'-0"x5'-0" x 12" MIN.	(6) #4 EA. WAY BOT.
CF1.33	16" W x 12" D MIN.	(2) #4 CONT.
CF1.50	18" W x 12" D MIN.	(2) #4 CONT.
CF2.0	24" W x 12" D MIN.	(3) #4 CONT.

SHEARWALL SCHEDULE

MARK	SHEATHING	NAILING		REMARKS
		EDGES	FIELD	
SW4	1/2" CDX PLYWOOD OR OSB	10d @ 4" O.C.	10d @ 12" O.C.	
SW6	1/2" CDX PLYWOOD OR OSB	10d @ 6" O.C.	10d @ 12" O.C.	

NOTES:

1. PROVIDE BLOCKING AT ALL UNSUPPORTED PANEL EDGES.
2. SHEATHING SHALL BE EXP. I EXTERIOR GRADE APA RATED WITH A SPAN RATIO OF 32/16.
3. ALL ANCHOR BOLTS SHALL HAVE A MINIMUM EMBEDMENT DEPTH OF 7" AND SHALL BE INSTALLED WITH A BPS3/4-6 BEARING PLATE PER 4/S2.
4. ALL EPOXY ANCHORS SHALL HAVE A MINIMUM EMBEDMENT DEPTH OF 6" AND SHALL BE INSTALLED WITH A BPS3/4-6 BEARING PLATE PER 4/S2.

NOTES:

1. IT SHALL BE THE CONTRACTOR'S DIRECT RESPONSIBILITY TO COMPLY WITH TYPICAL DETAILS AND GENERAL NOTES AS OUTLINED WITHIN THESE CONTRACT DOCUMENTS
2. DRAWINGS ARE DIAGRAMATIC IN NATURE AND ARE NOT INTENDED TO INDICATE PRECISE LOCATION OR SIZE OF EXISTING FRAMING, WHICH SHALL BE FIELD DETERMINED BY THE CONTRACTOR. THE CONTRACTOR SHALL VERIFY ALL FIELD CONDITIONS SO AS TO PROPERLY COORDINATE FOR THE NEW FRAMING REQUIREMENTS OUTLINED IN THESE CONTRACT DOCUMENTS, AND SHALL BRING ANY DISCREPANCY TO THE IMMEDIATE ATTENTION OF THE ARCHITECT, WHO SHALL ISSUE FINAL INSTRUCTIONS FOLLOWING REVIEW.
3. WHERE NEW FRAMING CONFLICTS WITH EXISTING MECHANICAL, ELECTRICAL OR PLUMBING WORK, THE ARCHITECT SHALL BE NOTIFIED PRIOR TO THE START OF ANY WORK.
4. EXISTING DIMENSIONS, WHERE SHOWN, ARE APPROXIMATE AND INTENDED FOR REFERENCE AND COORDINATION ONLY. THE CONTRACTOR SHALL FIELD-VERIFY ALL BUILDING DIMENSIONS AS REQUIRED FOR NEW CONSTRUCTION.
5. SEE 12/S2 FOR TYPICAL ENGINEERED FILL REQUIREMENTS.

GML ARCHITECTS · LLC
architects & planners
1575 DELUCCHI LN SUITE 120
RENO NEVADA 89502
P 775 829 8814
F 775 829 8828

REGISTERED PROFESSIONAL ENGINEER ROGER G. HYYTINEN CIVIL & STRUCTURAL No. 5799 STATE OF NEVADA
EXP. 6/30/15 6/2/14

HYYTINEN ENGINEERING
5458 Longley Lane, Suite B
Reno, Nevada 89511
Phone (775) 826-3019
Fax (775) 826-3076
HE # 57-13

CARSON CITY FLEET MAINTENANCE FACILITY EXPANSION

CARSON CITY, NEVADA

DATE	6-2-14
JOB NO	796
DRAWN	A.M.
CHECKED	R.H.

△1 BUILDING DEPARTMENT COMMENTS 4/24/14

FOUNDATION/ GROUND LEVEL PLAN

S4

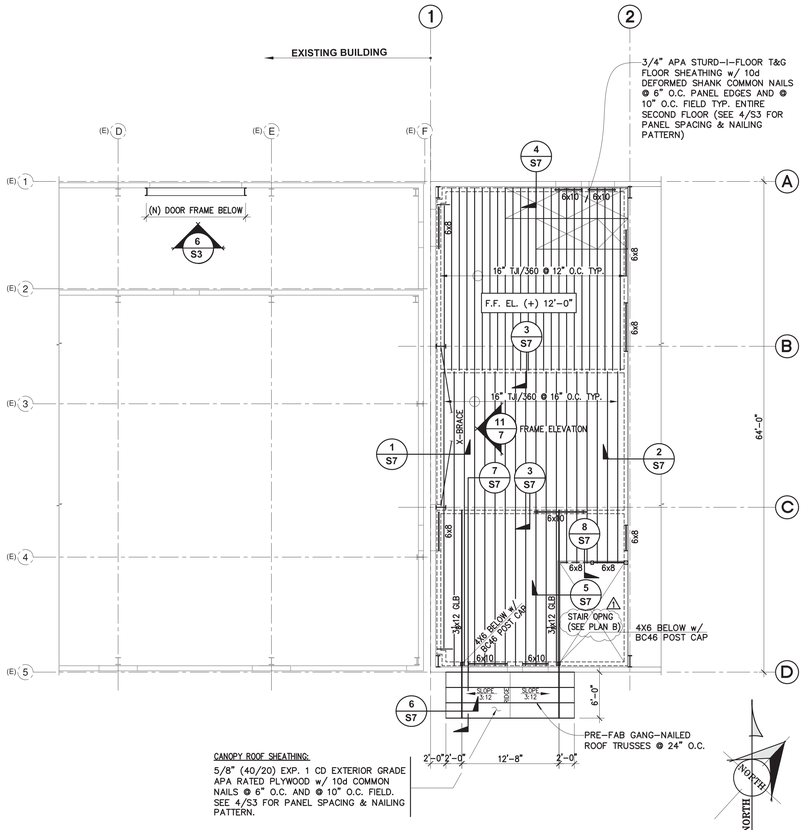

UPPER LEVEL FLOOR FRAMING PLAN

1/8"=1'-0"

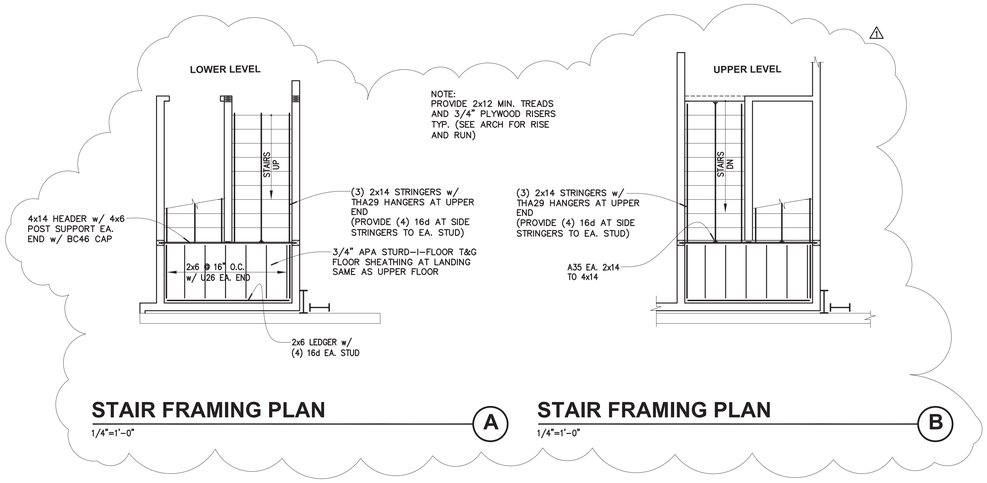

STAIR FRAMING PLAN (A)

1/4"=1'-0"

STAIR FRAMING PLAN (B)

1/4"=1'-0"

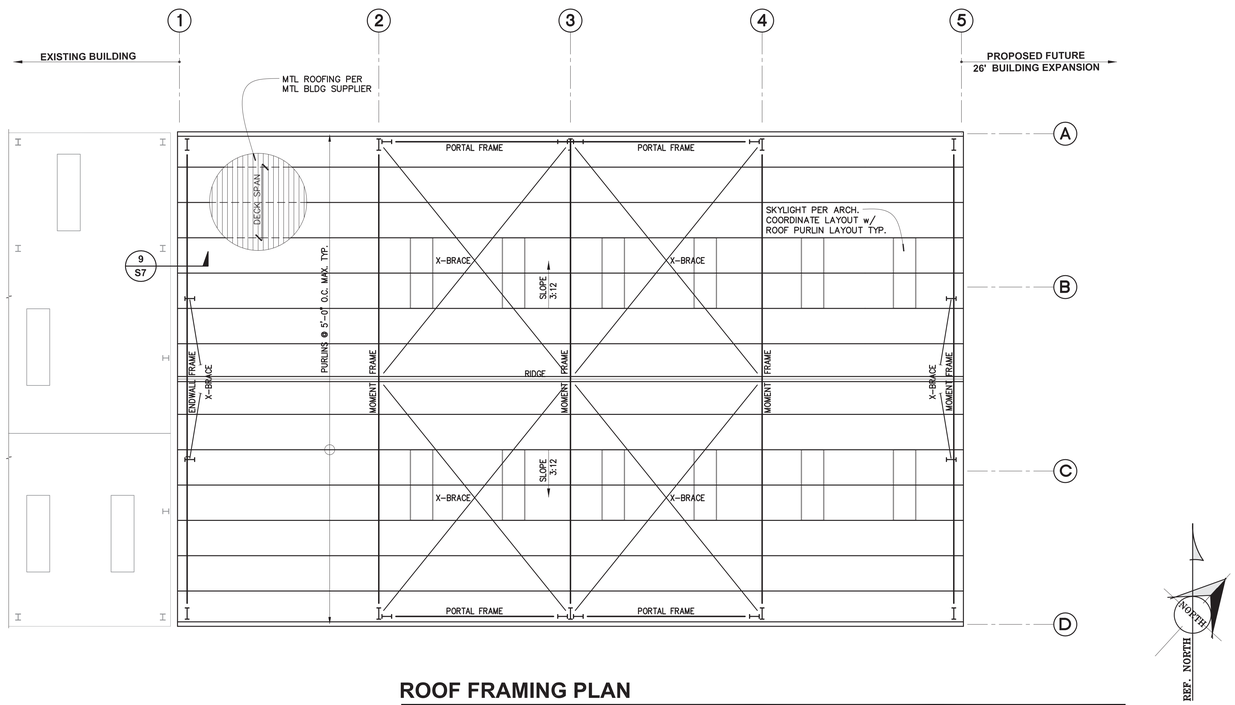

ROOF FRAMING PLAN

1/8"=1'-0"

Notes:

1. IT SHALL BE THE CONTRACTOR'S DIRECT RESPONSIBILITY TO COMPLY WITH DETAILS AND GENERAL NOTES AS OUTLINED WITHIN THESE CONTRACT DOCUMENTS
2. DRAWINGS ARE DIAGRAMATIC IN NATURE AND ARE NOT INTENDED TO INDICATE PRECISE LOCATION OR SIZE OF EXISTING FRAMING, WHICH SHALL BE FIELD DETERMINED BY THE CONTRACTOR. THE CONTRACTOR SHALL VERIFY ALL FIELD CONDITIONS SO AS TO PROPERLY COORDINATE FOR THE NEW FRAMING REQUIREMENTS OUTLINED IN THESE CONTRACT DOCUMENTS, AND SHALL BRING ANY DISCREPANCY TO THE IMMEDIATE ATTENTION OF THE ARCHITECT, WHO SHALL ISSUE FINAL INSTRUCTIONS FOLLOWING REVIEW.
3. WHERE NEW FRAMING CONFLICTS WITH EXISTING MECHANICAL, ELECTRICAL OR PLUMBING WORK, THE ARCHITECT SHALL BE NOTIFIED PRIOR TO THE START OF ANY WORK.
4. EXISTING DIMENSIONS, WHERE SHOWN, ARE APPROXIMATE AND INTENDED FOR REFERENCE AND COORDINATION ONLY. THE CONTRACTOR SHALL FIELD-VERIFY ALL BUILDING DIMENSIONS AS REQUIRED FOR NEW CONSTRUCTION.

GML ARCHITECTS · LLC
architects & planners
1575 DELUCCHI LN SUITE 120
RENO NEVADA 89502
P 775 829 8814
F 775 829 8828

REGISTERED PROFESSIONAL ENGINEER STATE OF NEVADA
ROGER G. HYYTINEN
CIVIL & STRUCTURAL
No. 5799
EXP. 6/30/15 6/2/14

HYYTINEN ENGINEERING
5458 Longley Lane, Suite B
Reno, Nevada 89511
Phone (775) 826-3019
Fax (775) 826-3076
HE # 57-13

CARSON CITY FLEET MAINTENANCE FACILITY EXPANSION

CARSON CITY, NEVADA

DATE	6-2-14
JOB NO	796
DRAWN	A.M.
CHECKED	R.H.

1 BUILDING DEPARTMENT COMMENTS 4/24/14

SECOND FLOOR AND ROOF FRAMING PLANS

S5

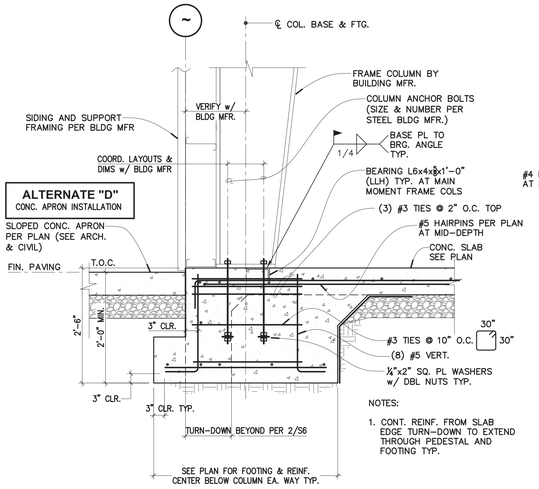

MOMENT FRAME COLUMN FOOTING
3/4"=1'-0"
1 / S6

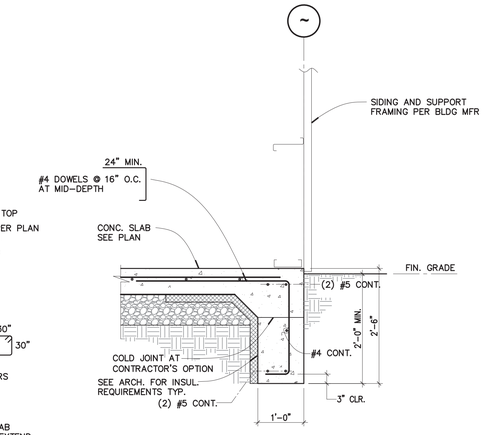

TURN-DOWN SLAB EDGE
3/4"=1'-0"
2 / S6

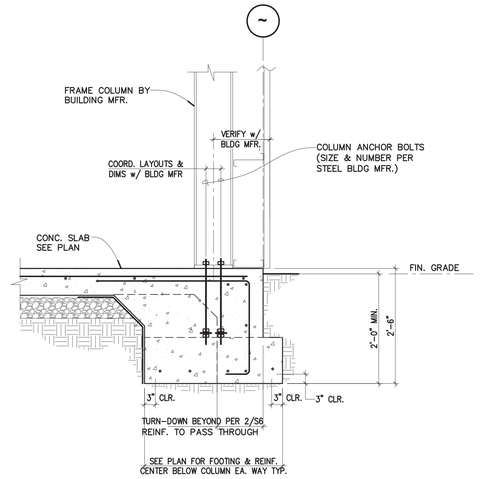

ENDWALL COLUMN AND FOOTING
3/4"=1'-0"
3 / S6

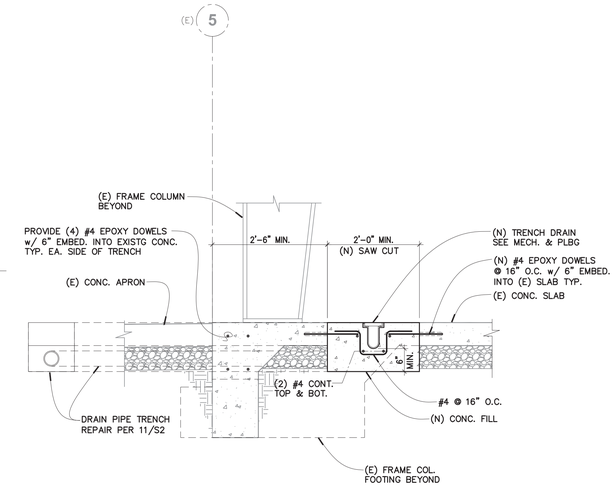

TRENCH DRAIN AT EXIST. DOOR OPENING
ALTERNATE "A"
TRENCH DRAIN INSTALLATION
3/4"=1'-0"
4 / S6

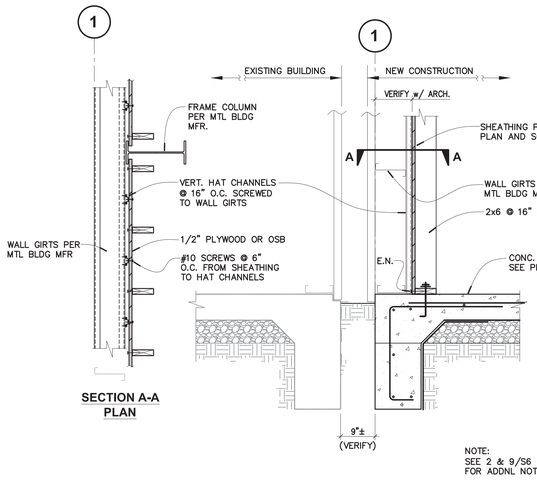

WALL ADJACENT EXIST. BUILDING
3/4"=1'-0"
5 / S6

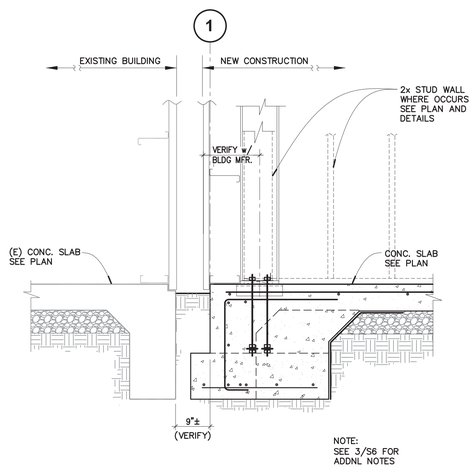

COLUMN FOOTING ADJACENT EXIST. BUILDING
3/4"=1'-0"
6 / S6

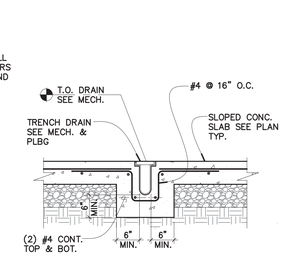

INTERIOR TRENCH DRAIN
3/4"=1'-0"
7 / S6

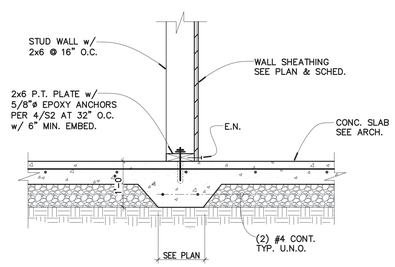

INTERIOR BEARING SHEARWALL
3/4"=1'-0"
8 / S6

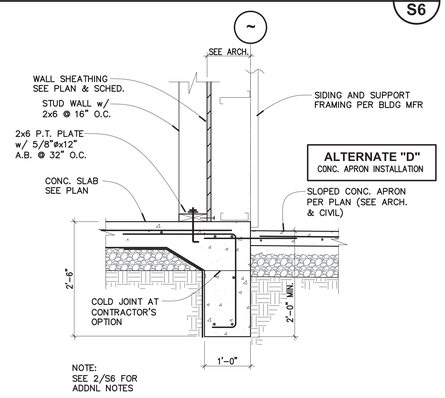

SHEARWALL AT SLAB EDGE
3/4"=1'-0"
9 / S6

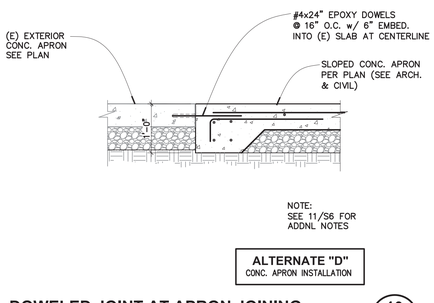

DOWELED JOINT AT APRON JOINING
3/4"=1'-0"
10 / S6

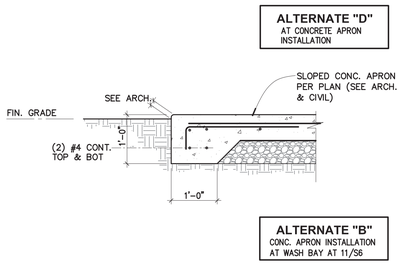

SLAB TURN-DOWN AT APRON
3/4"=1'-0"
11 / S6

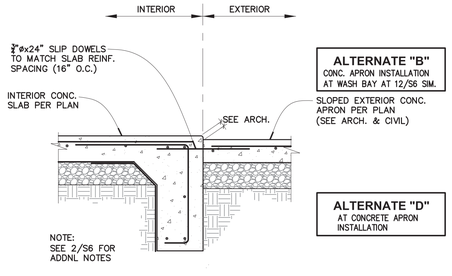

DOWELED JOINT TO APRON AT DOOR OPNG
3/4"=1'-0"
12 / S6

GML ARCHITECTS · LLC
architects & planners
1575 DELUCCHI LN SUITE 120
RENO NEVADA 89502
P 775 829 8814
F 775 829 8828

REGISTERED PROFESSIONAL ENGINEER ROGER G. HYYTINEN CIVIL & STRUCTURAL No. 5799 STATE OF NEVADA
EXP. 6/30/15 6/2/14

HYYTINEN ENGINEERING
5458 Longley Lane, Suite B
Reno, Nevada 89511
Phone (775) 826-3019
Fax (775) 826-3076
HE # 57-13

CARSON CITY FLEET MAINTENANCE FACILITY EXPANSION

CARSON CITY, NEVADA

DATE	6-2-14
JOB NO	796
DRAWN	A.M.
CHECKED	R.H.

⚠ BUILDING DEPARTMENT COMMENTS 4/24/14

SECTIONS AND DETAILS

S6

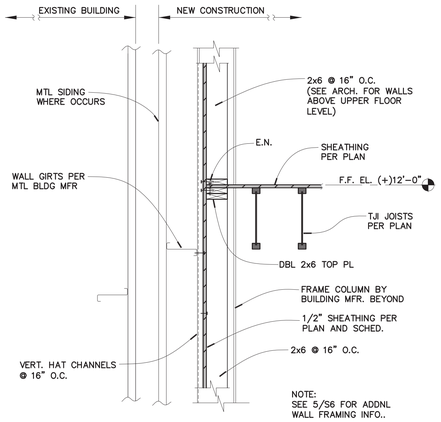

WALL ADJACENT EXISTING BUILDING

3/4"=1'-0"

1 / S7

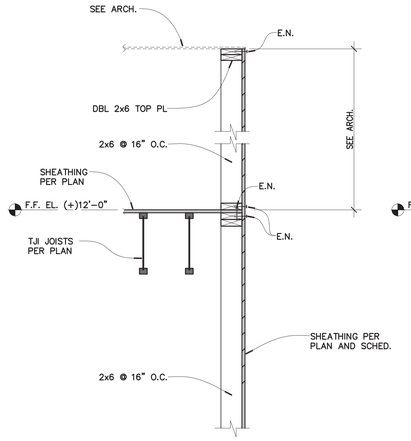

WALL PARALLEL TO JOISTS

3/4"=1'-0"

2 / S7

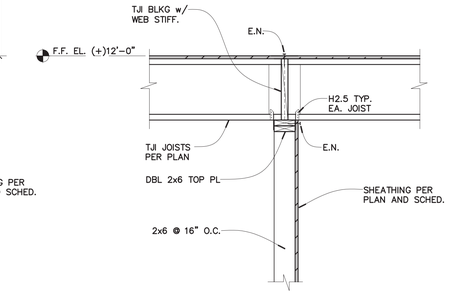

INTERMEDIATE BEARING WALL

3/4"=1'-0"

3 / S7

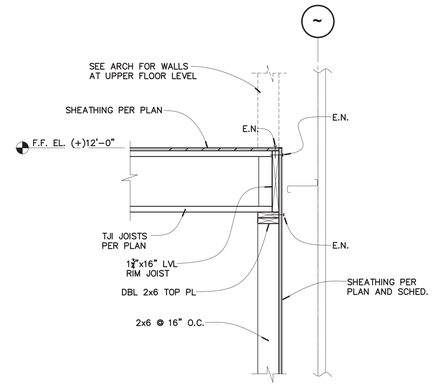

WALL PERPENDICULAR TO JOISTS

3/4"=1'-0"

4 / S7

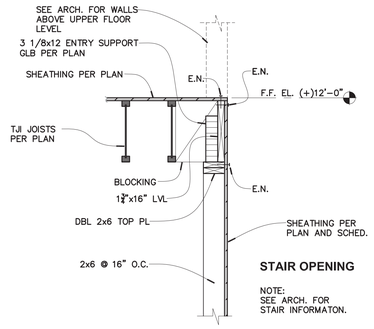

WALL AT STAIR OPENING

3/4"=1'-0"

5 / S7

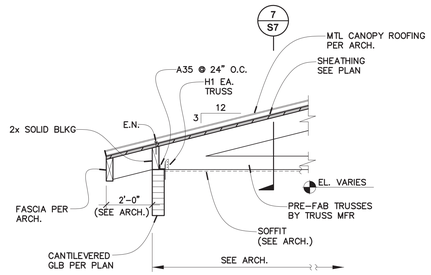

ENTRY CANOPY SECTION

3/4"=1'-0"

6 / S7

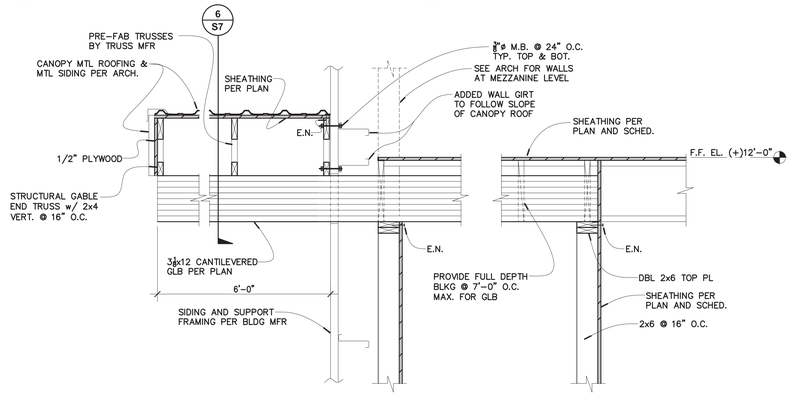

CANTILEVERED CANOPY SUPPORT BEAM

3/4"=1'-0"

7 / S7

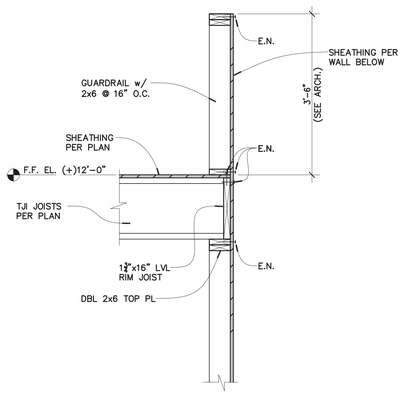

GUARDRAIL FRAMING

3/4"=1'-0"

8 / S7

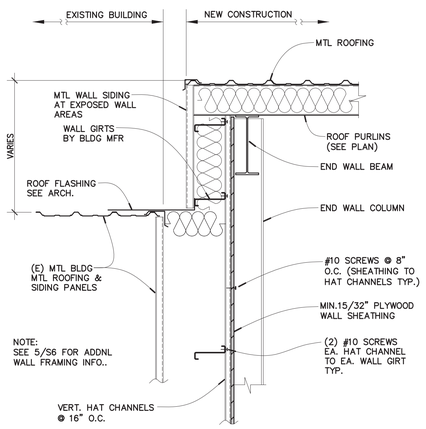

WALL ADJACENT EXISTING BUILDING

3/4"=1'-0"

9 / S7

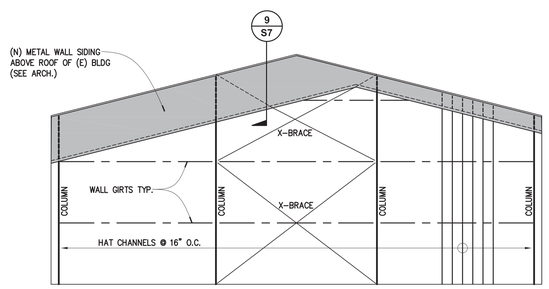

WEST ELEVATION

N.T.S.

10 / S7

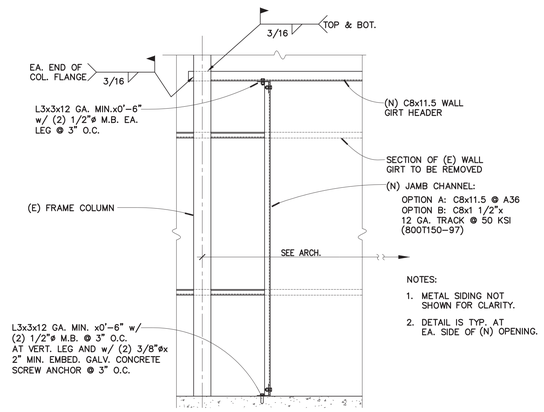

WALL CUT FOR NEW DOOR

3/4"=1'-0"

11 / S7

GML ARCHITECTS · LLC
architects & planners
1575 DELUCCHI LN SUITE 120
RENO NEVADA 89502
P 775 829 8814
F 775 829 8828

REGISTERED PROFESSIONAL ENGINEER STATE OF NEVADA
ROGER G. HYYTINEN
CIVIL & STRUCTURAL
No. 5799
EXP. 6/30/15 6/2/14

HYYTINEN ENGINEERING
5458 Longley Lane, Suite B
Reno, Nevada 89511
Phone (775) 826-3019
Fax (775) 826-3076
HE # 57-13

CARSON CITY FLEET MAINTENANCE FACILITY EXPANSION

CARSON CITY, NEVADA

DATE	6-2-14
JOB NO	796
DRAWN	A.M.
CHECKED	R.H.

⚠ BUILDING DEPARTMENT COMMENTS 4/24/14

SECTIONS AND DETAILS

S7

AIR DISTRIBUTION

NUMBERS ARE TITUS AS BASIS FOR DESIGN

CD	CEILING SUPPLY DIFFUSER	T-BAR	• MOD. MCD TYPE 3 FRAME
OC	CEILING SUPPLY DIFFUSER	GYPBOARD	• MOD. MCD TYPE 1 FRAME
R	CEILING RETURN	T-BAR	MOD. 50F 1/2" x 1/2" x 1/2" TYPE 3 FRAME
R	CEILING RETURN	GYPBOARD	MOD. 50F 1/2" x 1/2" x 1/2" TYPE 1 FRAME
G	CEILING EXHAUST	GYPBOARD	• MOD. 50F 1/2" x 1/2" x 1/2" TYPE 1 FRAME

• REQUIRES SQUARE TO ROUND ADAPTER

NOTES:
1. CD DESIGNATION '12/24 CD-4' INDICATES 12" ROUND DUCT CONNECTION FOR LAY-IN CEILING IN 24/24 PANEL WITH 4-WAY PATTERN.
2. CD DESIGNATION '12/24 CD-2C' INDICATES 12" ROUND DUCT CONNECTION FOR LAY-IN CEILING IN 24/24 PANEL WITH 2-WAY CORNER PATTERN.
3. CD DESIGNATION '10/10 CD-4' INDICATES A 10/10 DUCT CONNECTION FOR GYPBOARD CEILING WITH 4-WAY PATTERN. SEE PLANS FOR BRANCH DUCT SIZE.
4. AIR DISTRIBUTION TO BE ORDERED IN FACTORY WHITE FINISH.

EQUIPMENT SCHEDULE

AC 1 AIR CONDITIONER
CARRIER (NO EXCEPTION) MODEL 48HCLA05-0B0A0, 1950 CFM AT 0.5" ESP. 46.0/43.6 MBH TC/SC WITH 80/63.5 EDB/EWB AT 95 DEG. AMBIENT. 60/37.6 MBH HEATING INPUT/OUTPUT FOR 21 DEG. RISE. 27.0 MCA, 40A MOCP AND 83 LRA AT 208V/3PH/60HZ. 700 LBS OPER. WGT.

ACCESSORIES
1. 12" FLAT CURB FOR PAD MOUNT
2. ECONOMIZER WITH FAN POWERED RELIEF
3. PHASE MONITOR
4. NON FUSED DISCONNECT SWITCH
5. TIME GUARD II ANTI CYCLE TIMER

MUA 1 MAKE-UP AIR UNIT
GREENHECK MODEL DGX-120-H32 NATURAL GAS DIRECT FIRE MAKE-UP AIR UNIT. 11,025 CFM AT 0.5" ESP. 877 MBH HEATING INPUT, 806.8 MBH HEATING OUTPUT WITH 80° F. RISE. EVAPORATIVE COOLER SECTION 96/63 EDB/EWB AND 66.1/63 LDB/LWB. 7.5 HORSEPOWER, 29.2 MCA AND 50 MOCP AT 208V/230V. OPERATING WEIGHT = 2,700 POUNDS.

ACCESSORIES:
1. PREMIUM EFFICIENCY MOTOR
2. INLET DAMPER
3. UPBLAST DISCHARGE
4. DUCT LINER INSULATION
5. CONTROL CENTER
6. HEAT INLET AIR SENSOR
7. FLAT CURB FOR PAD MOUNT
8. 25:1 TURNDOWN
9. 2-10Vdc EXTERNAL CONTROL
10. NON-FUSED DISCONNECT SWITCH
11. MULTI-TAP MOTOR

MUA 2 MAKE-UP AIR UNIT
GREENHECK MODEL DGX-120-H32 NATURAL GAS DIRECT FIRE MAKE-UP AIR UNIT. 9,025 CFM AT 0.5" ESP. 719 MBH HEATING INPUT, 662.3 MBH HEATING OUTPUT WITH 80° F. RISE. EVAPORATIVE COOLER SECTION 96/63 EDB/EWB AND 65.8/63 LDB/LWB, 7.5 HORSEPOWER, 29.5 MCA AND 50 MOCP AT 208V/230V. OPERATING WEIGHT = 2,700 POUNDS.

ACCESSORIES:
1. PREMIUM EFFICIENCY MOTOR
2. INLET DAMPER
3. UPBLAST DISCHARGE
4. DUCT LINER INSULATION
5. CONTROL CENTER
6. HEAT INLET AIR SENSOR
7. FLAT CURB FOR PAD MOUNT
8. 25:1 TURNDOWN
9. 2-10Vdc EXTERNAL CONTROL
10. NON-FUSED DISCONNECT SWITCH
11. MULTI-TAP MOTOR

VEF 1, VEF 2, VEF 3 VEHICLE EXHAUST
NATIONAL SYSTEM GARAGE VENTILATION MODEL #SHR-6XT-25 SPRING OPERATED HOSE REEL WITH 25 FEET OF 6" DIA. HIGH TEMPERATURE MODEL XT HOSE WITH VEHICLE EXHAUST CONNECTION/ADAPTORS. FURNISH WITH REEL MOUNTED BLOWER PACKAGE MODEL P-B11 600 CFM DIRECT DRIVE EXHAUSTER WITH REEL PLATFORM AND COVER. 1 HORSEPOWER AT 208V/230V

VEF 4, VEF 5 VEHICLE EXHAUST
NATIONAL SYSTEM GARAGE VENTILATION MODEL #SHR-5XT-25 SPRING OPERATED HOSE REEL WITH 25 FEET OF 5" DIA. HIGH TEMPERATURE MODEL XT HOSE WITH VEHICLE EXHAUST CONNECTION/ADAPTORS. FURNISH WITH REEL MOUNTED BLOWER PACKAGE MODEL P-B11 500 CFM DIRECT DRIVE EXHAUSTER WITH REEL PLATFORM AND COVER. 1 HORSEPOWER AT 208V/230V

EF 1 EXHAUST FAN
GREENHECK MODEL SQ-95-D, 500 CFM AT 0.33" S.P. 1/8 HORSEPOWER AT 120V/1PH/60HZ OPERATING WEIGHT = 65 POUNDS

ACCESSORIES:
1. UL 705
2. NEMA 1 DISCONNECT MOUNTED AND WIRED
3. 1" HOUSING INSULATION
4. MOTOR COVER
5. SOLID STATE SPEED CONTROL
6. MOTOR WR THERMAL OVERLOADS
7. BACKDRAFT DAMPER

WEF 1 WELDING EXHAUST FAN
GREENHECK MODEL SFD-6-A, 500 CFM AT 0.5" S.P. AT 125° F. E.A.T. 1/4 HORSEPOWER AT 120V/1PH/60HZ OPERATING WEIGHT = 85 POUNDS

ACCESSORIES:
1. UL 705
2. NEMA 1 DISCONNECT FIELD INSTALLED
3. FACTORY EQUIPMENT SUPPORTS (2) GESS-17-4-G8
4. BACKDRAFT DAMPER
5. WEATHERHOOD
6. OUTLET GUARD
7. SOLID STATE SPEED CONTROL
8. MOTOR WITH THERMAL OVERLOADS

WH 1 WEATHER HOOD
GREENHECK "FABRA HOOD" MODEL FGR 63"x48" THROAT, 12 SQUARE FOOT FREE AREA TO RELIEVE 4940 CFM OPERATING WEIGHT = 185 POUNDS

ACCESSORIES:
1. BIRD SCREEN
2. 12" TALL BASE
3. SLOPED ROOF CURB
4. 1/2" INSULATION
5. GREENHECK MODEL BR-10 ADJUSTABLE BACKDRAFT DAMPER SET AT 0.08" PRESSURE
6. FACTORY APPLIED BAKED ENAMEL "PUEBLO TAN"

WH 2 WEATHER HOOD
GREENHECK "FABRA HOOD" MODEL FGR 18"x24" THROAT, 3 SQUARE FOOT FREE AREA TO RELIEVE 1150 CFM OPERATING WEIGHT = 100 POUNDS

ACCESSORIES:
1. BIRD SCREEN
2. 12" TALL BASE
3. SLOPED ROOF CURB
4. 1/2" INSULATION
5. GREENHECK MODEL BR-10 ADJUSTABLE BACKDRAFT DAMPER SET AT 0.08" PRESSURE
6. FACTORY APPLIED BAKED ENAMEL "PUEBLO TAN"

WH 3 WEATHER HOOD
GREENHECK "FABRA HOOD" MODEL FGR 42"x54" THROAT, 15.75 SQUARE FOOT FREE AREA TO RELIEVE 6100 CFM OPERATING WEIGHT = 225 POUNDS

ACCESSORIES:
1. BIRD SCREEN
2. 12" TALL BASE
3. SLOPED ROOF CURB
4. 1/2" INSULATION
5. GREENHECK MODEL BR-10 ADJUSTABLE BACKDRAFT DAMPER SET AT 0.08" PRESSURE
6. FACTORY APPLIED BAKED ENAMEL "PUEBLO TAN"

WH 4 WEATHER HOOD
GREENHECK "FABRA HOOD" MODEL FGR 24"x42" THROAT, 7 SQUARE FOOT FREE AREA TO RELIEVE 2950 CFM OPERATING WEIGHT = 150 POUNDS

ACCESSORIES:
1. BIRD SCREEN
2. 12" TALL BASE
3. SLOPED ROOF CURB
4. 1/2" INSULATION
5. GREENHECK MODEL BR-10 ADJUSTABLE BACKDRAFT DAMPER SET AT 0.08" PRESSURE
6. FACTORY APPLIED BAKED ENAMEL "PUEBLO TAN"

EWH 1 ELECTRIC WALL HEATER
QMARK MODEL SED1024C FAN FORCED ELECTRIC WALL HEATER, 1000 WATTS (230V), 7.2 AMPS AT 208V/230V. FURNISH IN WHITE.

ACCESSORIES:
1. INTEGRAL THERMOSTAT
2. FURNISH WITH SEDFCW WHITE FRONT PANEL

WEH 1 WELDING EXHAUST HOOD
FIELD FABRICATED STEEL EXHAUST HOOD, SEE 7/M6.1

△1

MECHANICAL LEGEND & ABBREVIATIONS

ALL ITEMS SHOWN IN THIS LEGEND ARE NOT NECESSARILY USED ON THE DRAWINGS.

ABBREV.	SYMBOL	DESCRIPTION
SUP		SUPPLY AIR
RET		RETURN AIR
EXH		EXHAUST AIR
TH.		THERMOMETER (DIAL)
P & TR		PRESSURE & TEMPERATURE RELIEF VALVE
PG		PRESSURE GAUGE WITH GAUGE COCK
T	T	THERMOSTAT
HS	HS	HEATING WATER SUPPLY
HR	HR	HEATING WATER RETURN
CFM	CFM	CUBIC FEET PER MINUTE
RD	ø	ROUND
REF		REFERENCE
POC		POINT OF CONNECTION
FBO		FURNISHED BY OTHERS
S OR W		SOIL, WASTE OR SEWER BELOW GRADE
S OR W		SOIL, WASTE OR SEWER ABOVE GRADE
V		VENT
CW		COLD WATER
HW		HOT WATER
TW	TW	TEMPERED WATER
GV		GATE VALVE
CV		CHECK VALVE
BV/SOV		BALL VALVE/SHUT OFF VALVE
GC		GAS COCK
GPR		GAS PRESSURE REGULATOR
PRV		PRESSURE REDUCING VALVE
AFF		ABOVE FINISH FLOOR
HB		HOSE BIBB
UN		UNION
D	D	DRAIN LINE
TYP.		TYPICAL
I.E.		INVERT ELEVATION
(E)		EXISTING
(N)		NEW
FB		FROM BELOW
TA		TO ABOVE

DRAWING INDEX

M0.1 – MECHANICAL LEGEND, SCHEDULES, NOTES, AND INDEX
M1.1 – MECHANICAL DEMOLITION FLOOR PLANS
M2.1 – MECHANICAL FLOOR PLANS
M3.1 – MECHANICAL ROOF PLAN
M4.1 – MECHANICAL SECTIONS
M6.1 – MECHANICAL DETAILS
TC1.1 – TEMPERATURE CONTROLS

CML ARCHITECTS • LLC
architects & planners
1575 DELUCCHI LN • SUITE 120
RENO • NEVADA 89502
P • 775 • 829 • 8814
F • 775 • 829 • 8828

REGISTERED PROFESSIONAL ENGINEER, STATE OF NEVADA, STEVEN H. AINSWORTH, Exp. 12-31-14, MECHANICAL, No. 8139
6.4.14

CARSON CITY FLEET MAINTENANCE FACILITY EXPANSION

CARSON CITY, NEVADA

DATE	6-2-14
JOB NO	796
DRAWN	JSH/ER
CHECKED	SA

△1 BUILDING DEPARTMENT COMMENTS 4/24/14

MECHANICAL LEGEND, SCHEDULES, NOTES, AND INDEX

M0.1

AINSWORTH ASSOCIATES
MECHANICAL ENGINEERS
3741 BUSINESS DR. SACRAMENTO, CA 95820 TEL: 916-737-6014 FAX: 916-737-6015
1420 HOLCOMB AVE., SUITE 201 RENO, NV 89502 TEL: 775-329-9100 FAX: 775-329-9105
www.aa-me.com

JOB: 2013-056

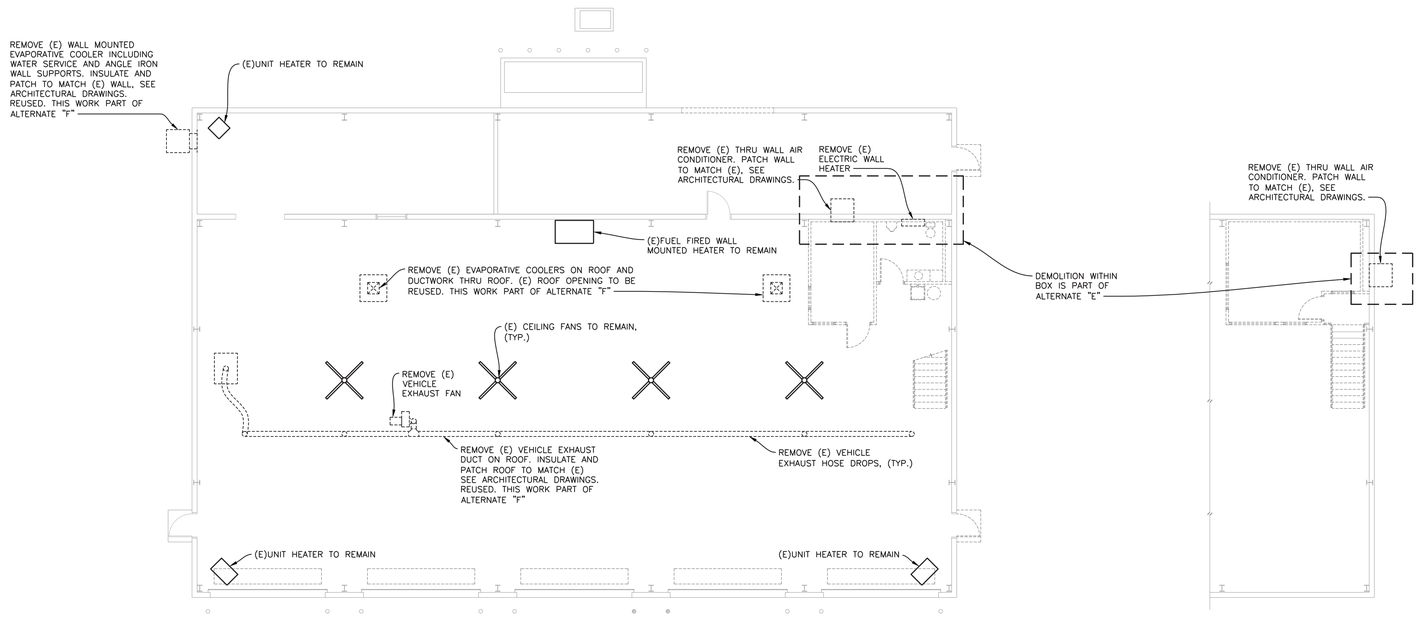

MECHANICAL DEMOLITION FLOOR PLANS

SCALE: 1/8" = 1'-0"

A
M1.1

GML ARCHITECTS · LLC
architects & planners
1575 DELUCCHI LN · SUITE 120
RENO · NEVADA 89502
P · 775 · 829 · 8814
F · 775 · 829 · 8828

REGISTERED PROFESSIONAL ENGINEER · STATE OF NEVADA
STEVEN H. AINSWORTH
Exp. 12-31-14
MECHANICAL
No. 8139

6.4.14

CARSON CITY FLEET MAINTENANCE FACILITY EXPANSION

CARSON CITY, NEVADA

DATE	6-2-14
JOB NO	796
DRAWN	JSH/ER
CHECKED	SA

⚠ BUILDING DEPARTMENT COMMENTS 4/24/14

MECHANICAL DEMOLITION FLOOR PLANS

M1.1

AINSWORTH ASSOCIATES
MECHANICAL ENGINEERS
3741 BUSINESS DR.
SACRAMENTO, CA 95820
TEL: 916-737-6014
FAX: 916-737-6015
1420 HOLCOMB AVE., SUITE 201
RENO, NV 89502
TEL: 775-329-9100
FAX: 775-329-9105
www.aa-me.com

JOB: 2013-056

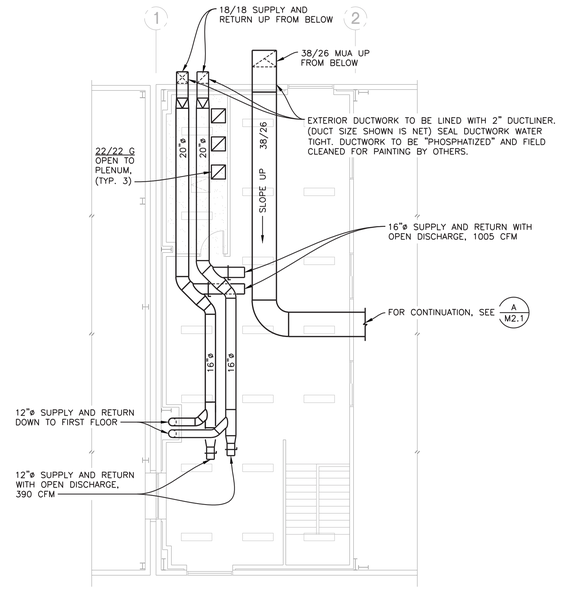

SECOND FLOOR PLAN - BASE BID

SCALE: 1/8" = 1'-0"

B M2.1

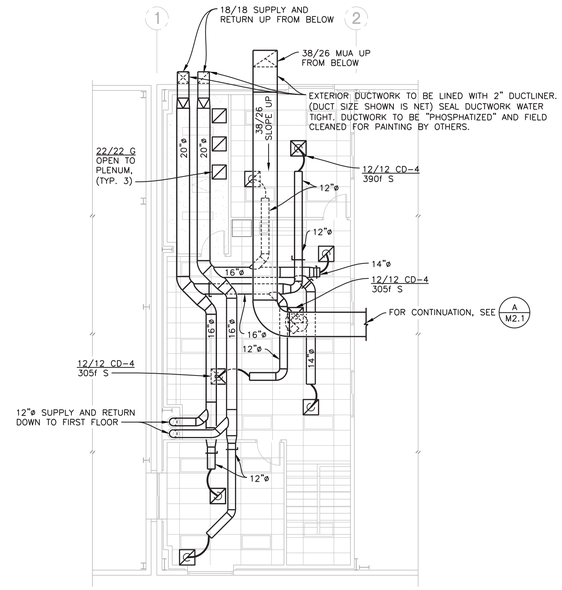

SECOND FLOOR PLAN - ALTERNATE "C"

SCALE: 1/8" = 1'-0"

C M2.1

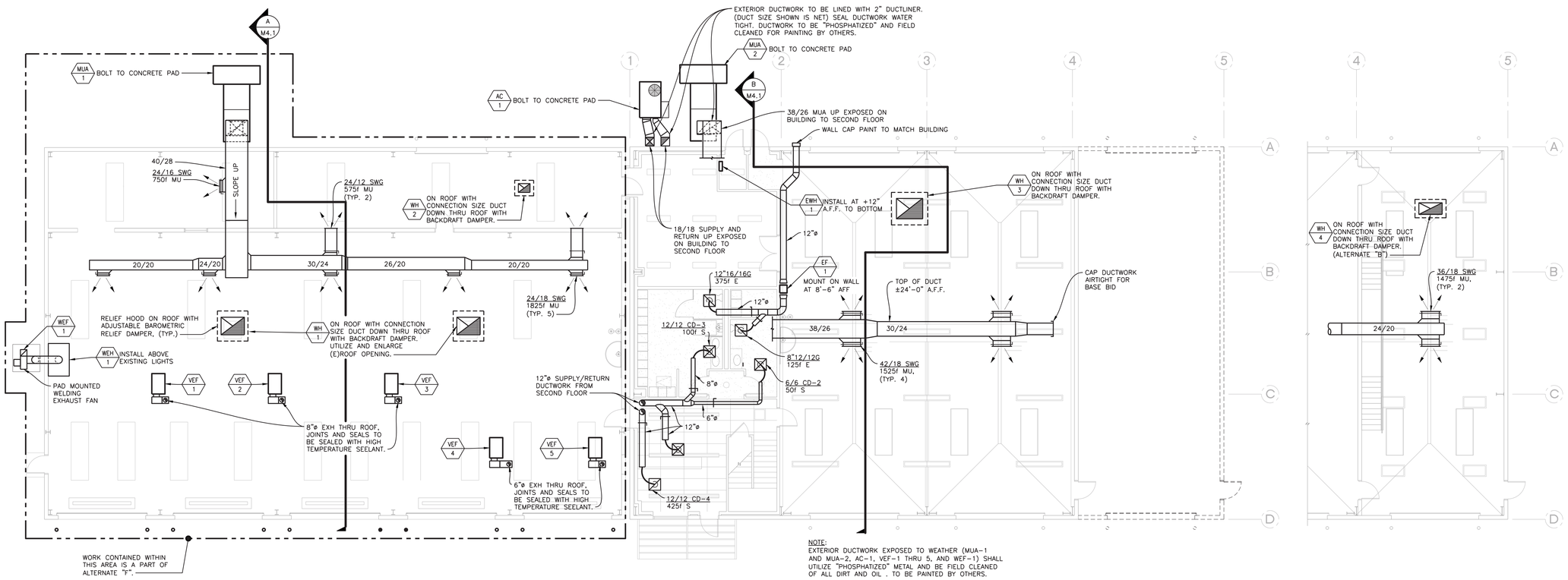

NOTE:
EXTERIOR DUCTWORK EXPOSED TO WEATHER (MUA-1 AND MUA-2, AC-1, VEF-1 THRU 5, AND WEF-1) SHALL UTILIZE "PHOSPHATIZED" METAL AND BE FIELD CLEANED OF ALL DIRT AND OIL . TO BE PAINTED BY OTHERS.

MECHANICAL FLOOR PLAN

SCALE: 1/8" = 1'-0"

A M2.1

MECHANICAL FLOOR PLAN ALTERNATE "B"

SCALE: 1/8" = 1'-0"

B M2.1

AINSWORTH ASSOCIATES
MECHANICAL ENGINEERS
3741 BUSINESS DR.
SACRAMENTO, CA 95820
TEL: 916-737-6014
FAX: 916-737-6015
1420 HOLCOMB AVE., SUITE 201
RENO, NV 89502
TEL: 775-329-9100
FAX: 775-329-9105
www.aa-me.com
JOB: 2013-056

GML ARCHITECTS · LLC
architects & planners
1575 DELUCCHI LN · SUITE 120
RENO · NEVADA 89502
P · 775 · 829 · 8814
F · 775 · 829 · 8828

REGISTERED PROFESSIONAL ENGINEER, STATE OF NEVADA, STEVEN H. AINSWORTH, Exp. 12-31-14, MECHANICAL, No. 8139

6.4.14

CARSON CITY FLEET MAINTENANCE FACILITY EXPANSION

CARSON CITY, NEVADA

DATE	6-2-14
JOB NO	796
DRAWN	JSH/ER
CHECKED	SA

⚠ BUILDING DEPARTMENT COMMENTS 4/24/14

MECHANICAL FLOOR PLANS

M2.1

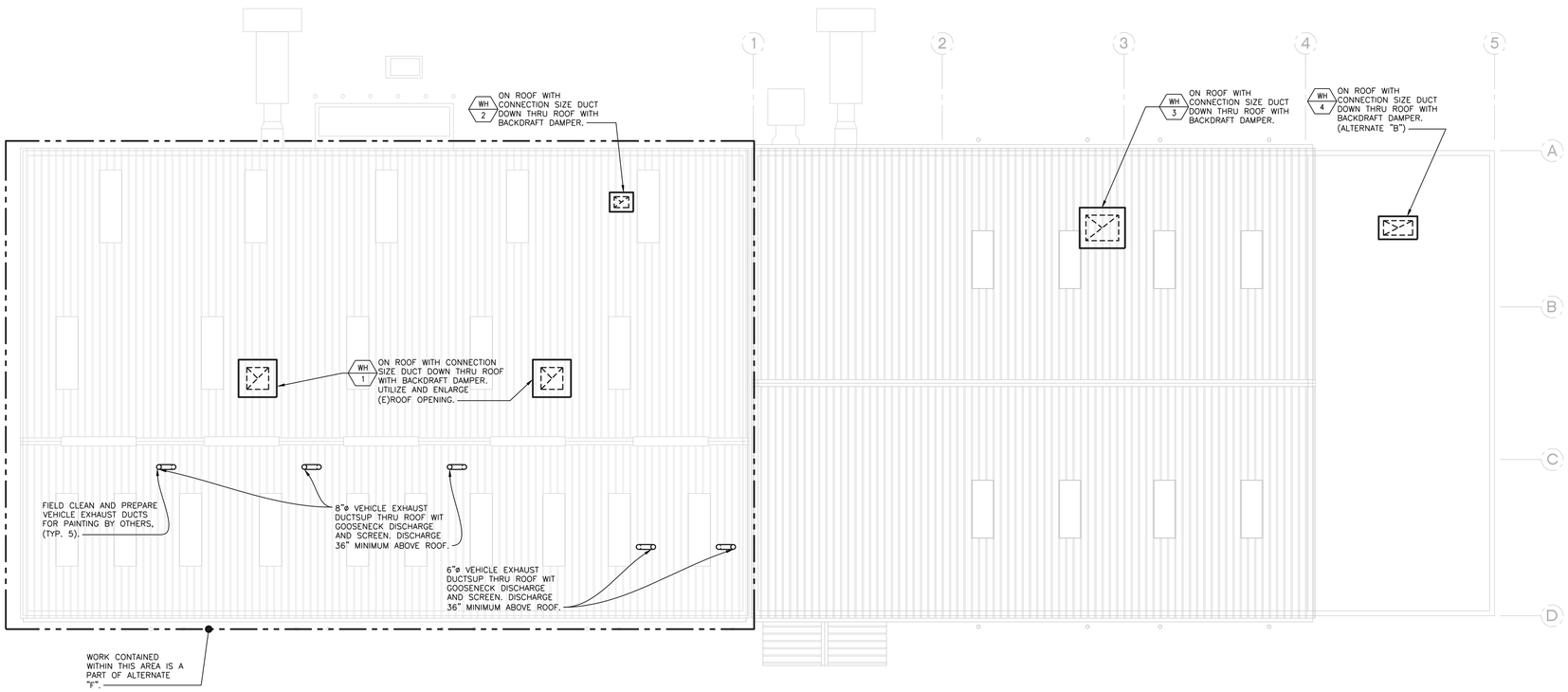

MECHANICAL ROOF PLAN

SCALE: 1/8" = 1'-0"

A
M3.1

GML ARCHITECTS · LLC
architects & planners
1575 DELUCCHI LN · SUITE 120
RENO · NEVADA 89502
P · 775 · 829 · 8814
F · 775 · 829 · 8828

REGISTERED PROFESSIONAL ENGINEER · STATE OF NEVADA
STEVEN H. AINSWORTH
Exp. 12-31-14
MECHANICAL
No. 8139

6.4.14

CARSON CITY FLEET MAINTENANCE FACILITY EXPANSION

CARSON CITY, NEVADA

DATE	6-2-14
JOB NO	796
DRAWN	JSH/ER
CHECKED	SA

⚠ BUILDING DEPARTMENT COMMENTS 4/24/14

MECHANICAL ROOF PLAN

M3.1

AINSWORTH ASSOCIATES
MECHANICAL ENGINEERS
3741 BUSINESS DR.
SACRAMENTO, CA 95820
TEL: 916-737-6014
FAX: 916-737-6015
1420 HOLCOMB AVE., SUITE 201
RENO, NV 89502
TEL: 775-329-9100
FAX: 775-329-9105
www.aa-me.com
JOB: 2013-056

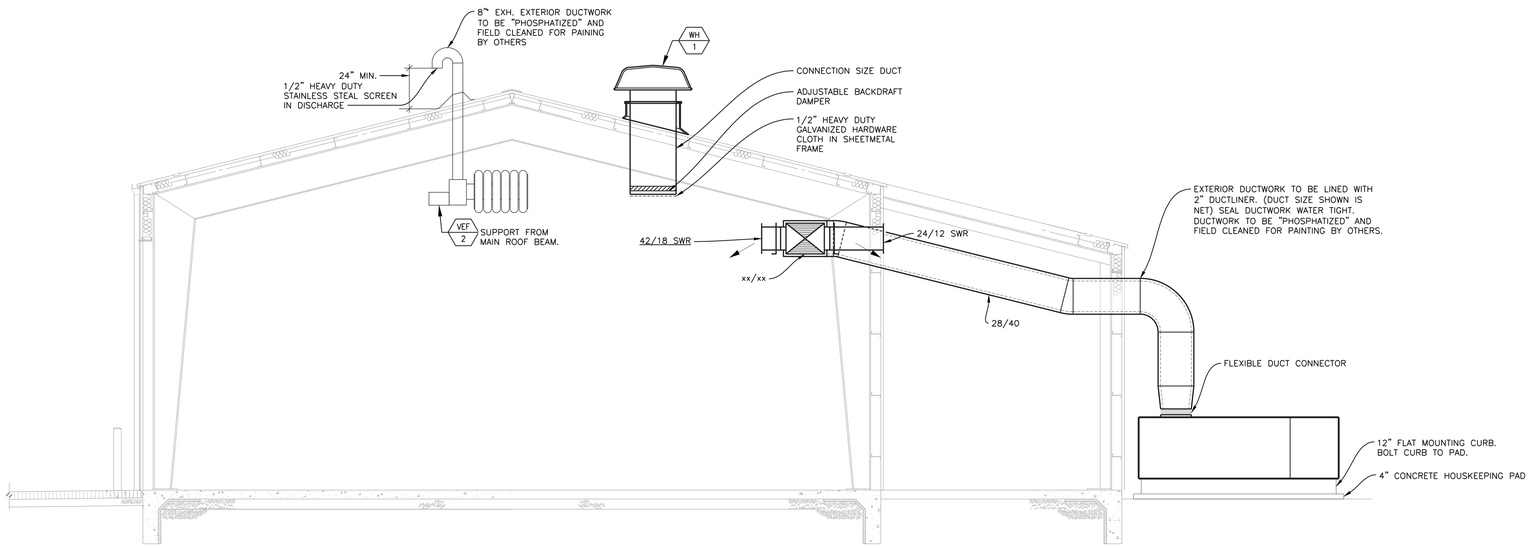

MECHANICAL SECTION
SCALE: ##########
A
M4.1

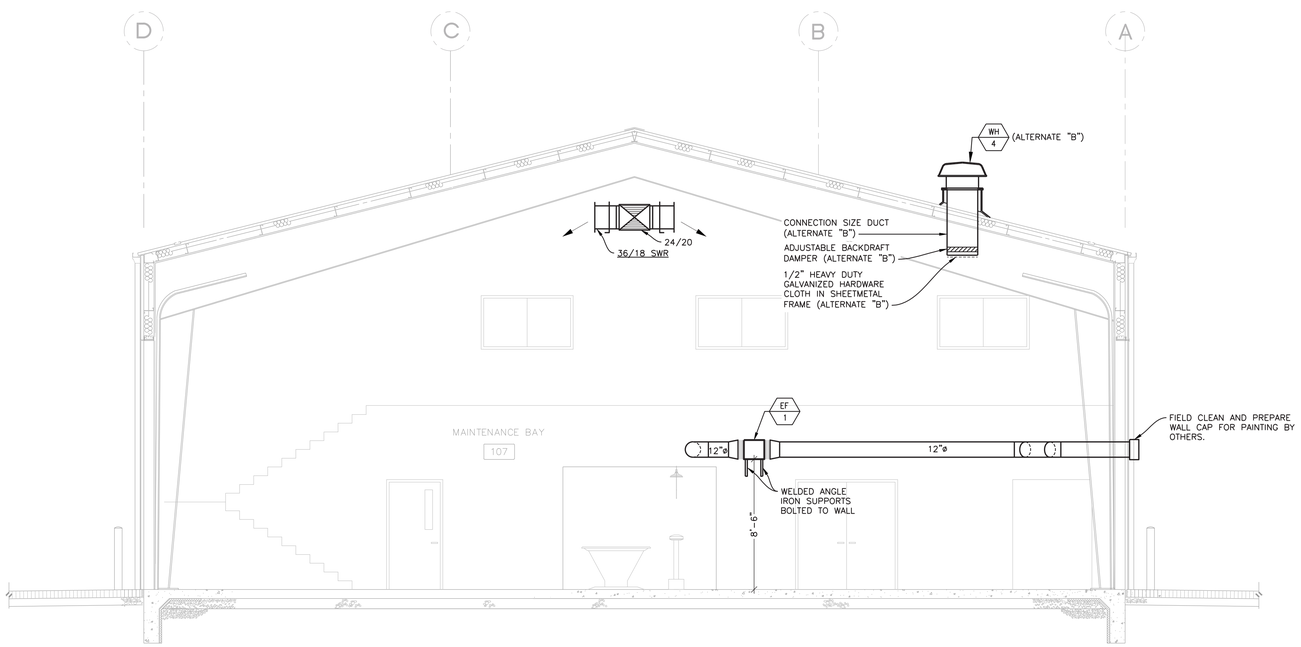

MECHANICAL SECTION
SCALE: 1/4" = 1'-0"
B
M4.1

GML ARCHITECTS · LLC
architects & planners
1575 DELUCCHI LN · SUITE 120
RENO · NEVADA 89502
P · 775 · 829 · 8814
F · 775 · 829 · 8828

STEVEN H. AINSWORTH
Exp. 12-31-14
MECHANICAL
No. 8139
6.4.14

CARSON CITY FLEET MAINTENANCE FACILITY EXPANSION

CARSON CITY, NEVADA

DATE	6-2-14
JOB NO	796
DRAWN	JSH/ER
CHECKED	SA

BUILDING DEPARTMENT COMMENTS 4/24/14

MECHANICAL SECTIONS

M4.1

AINSWORTH ASSOCIATES
MECHANICAL ENGINEERS
3741 BUSINESS DR.
SACRAMENTO, CA 95820
TEL: 916-737-6014
FAX: 916-737-6015
1420 HOLCOMB AVE., SUITE 201
RENO, NV 89502
TEL: 775-329-9100
FAX: 775-329-9105
www.aa-mc.com

JOB: 2013-056

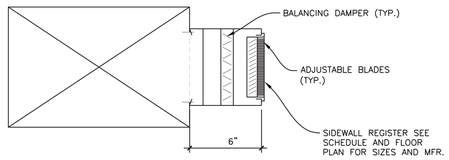

EXPOSED DUCT REGISTER

NO SCALE AAM1006

1 / M6.1

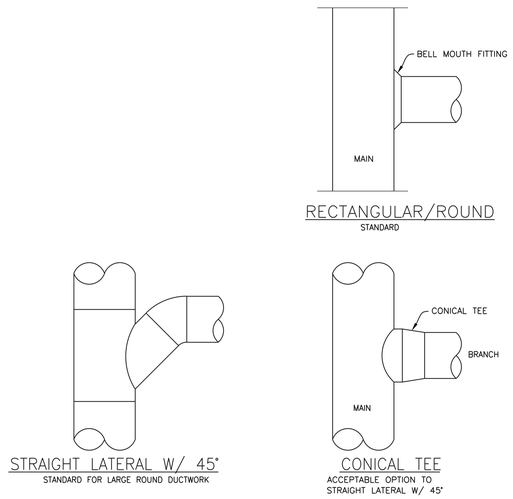

TYPICAL BRANCH DUCTS

NO SCALE AAM1101

2 / M6.1

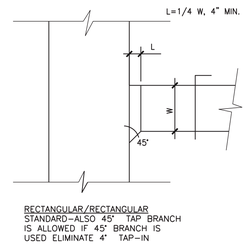

BRANCH DUCT

NO SCALE AAM1102

3 / M6.1

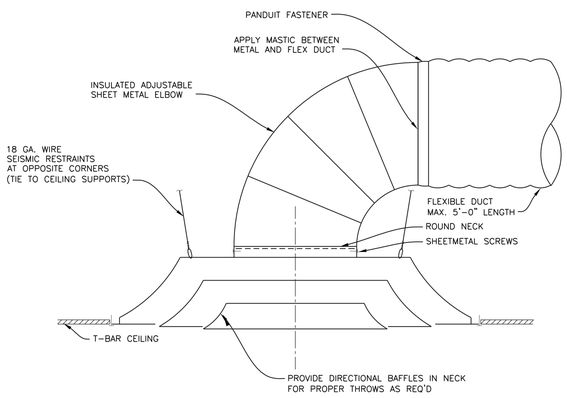

CEILING DIFFUSER

NO SCALE AAM1001

4 / M6.1

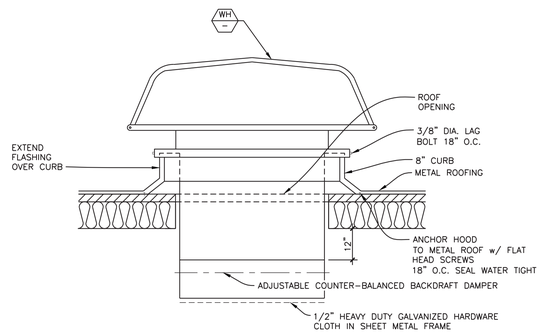

WEATHER HOOD

NO SCALE AAM827

5 / M6.1

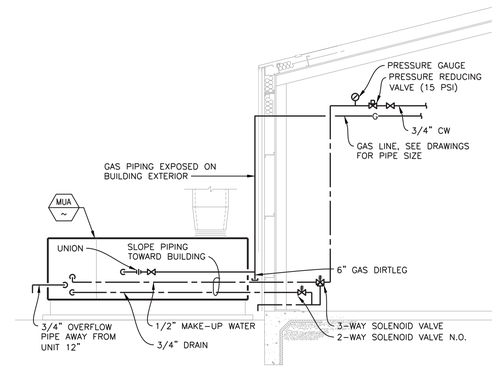

MECHANICAL SECTION

SCALE: 1/4" = 1'-0"

6 / M6.1

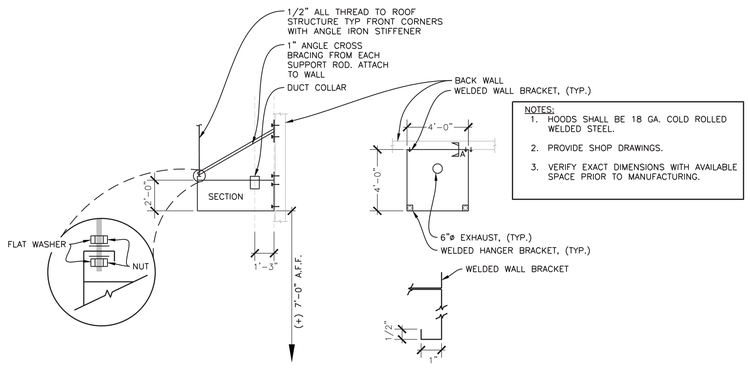

NOTES:
1. HOODS SHALL BE 18 GA. COLD ROLLED WELDED STEEL.
2. PROVIDE SHOP DRAWINGS.
3. VERIFY EXACT DIMENSIONS WITH AVAILABLE SPACE PRIOR TO MANUFACTURING.

WELDING EXHAUST HOOD DETAIL

NOT TO SCALE

7 / M6.1

AINSWORTH ASSOCIATES
MECHANICAL ENGINEERS
3741 BUSINESS DR.
SACRAMENTO, CA 95820
TEL: 916-737-6014
FAX: 916-737-6015
1420 HOLCOMB AVE., SUITE 201
RENO, NV 89502
TEL: 775-329-9100
FAX: 775-329-9105
www.aa-me.com
JOB: 2013-056

GML ARCHITECTS · LLC
architects & planners
1575 DELUCCHI LN · SUITE 120
RENO · NEVADA 89502
P · 775 · 829 · 8814
F · 775 · 829 · 8828

REGISTERED PROFESSIONAL ENGINEER, STATE OF NEVADA
STEVEN H. AINSWORTH
Exp. 12-31-14
MECHANICAL
No. 8139

6.4.14

CARSON CITY FLEET MAINTENANCE FACILITY EXPANSION

CARSON CITY, NEVADA

DATE	6–2–14
JOB NO	796
DRAWN	JSH/ER
CHECKED	SA

⚠ BUILDING DEPARTMENT COMMENTS 4/24/14

MECHANICAL DETAILS

M6.1

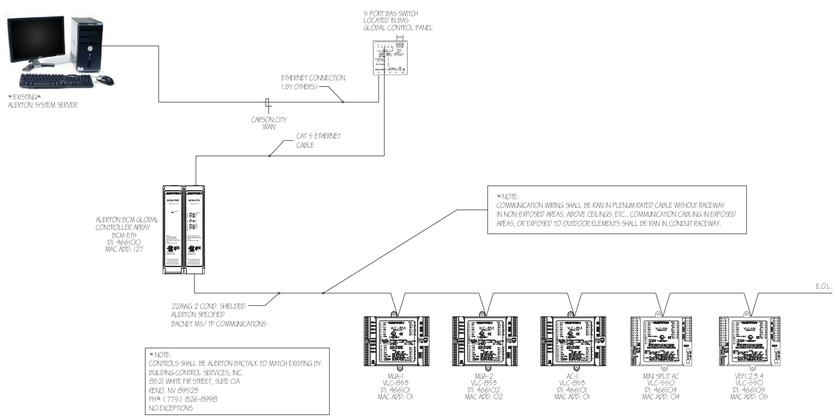

CONTROL SYSTEM ARCHITECTURE

NOT TO SCALE

1 / TC1.1

MUA SEQUENCE OF OPERATION

WARMUP CYCLE:

ROOM SENSOR STARTS MUA SUPPLY FAN, OPENS THE OUTSIDE AIR DAMPER AND MODULATES THE MUA BURNER AS REQUIRED TO REACH "OCCUPIED CYCLE" TEMPERATURE SETPOINT AT PROGRAMMED TIME OF OCCUPANCY.

IF A VEHICLE EXHAUST FAN IS STARTED, THE SYSTEM SHALL REVERT TO THE "OCCUPIED CYCLE". (MUA-1 ONLY)

OCCUPIED CYCLE:

SUPPLY FAN SHALL START AND OUTSIDE AIR DAMPER SHALL OPEN IF NOT ALREADY ACCOMPLISHED BY THE "WARM-UP CYCLE", AT PROGRAMMED TIME OF OCCUPANCY.

IF THE OUTSIDE AIR TEMPERATURE IS LESS THAN 66 DEG F (ADJ), THE MUA BURNER SHALL BE ENABLED AND MODULATED TO MAINTAIN A DISCHARGE AIR SETPOINT OF 70 DEG F (ADJ).

IF THE OUTSIDE AIR TEMPERATURE IS GREATER THAN76 DEG F (ADJ) THE MUA EVAPORATIVE COOLING SHALL BE ENABLED AND CYCLED TO MAINTAIN A DISCHARGE AIR SETPOINT OF 70 DEG F (ADJ).

THE EVAPORATIVE COOLER SUMP SHALL DRAIN DOWN WHENEVER THE OUTSIDE AIR TEMPERATURE FALLS BELOW 45 DEG F (ADJ) TO PROTECT FROM FREEZING. THE EVAPORATIVE COOLER SUMP SHALL DRAIN DOWN ONCE DAILY AT 1 A.M.

SAFETY CONTROL:

INTERLOCK THE MUA UNIT TO SHUT DOWN WHENEVER THE DUCT SMOKE DETECTOR IS ACTIVATED

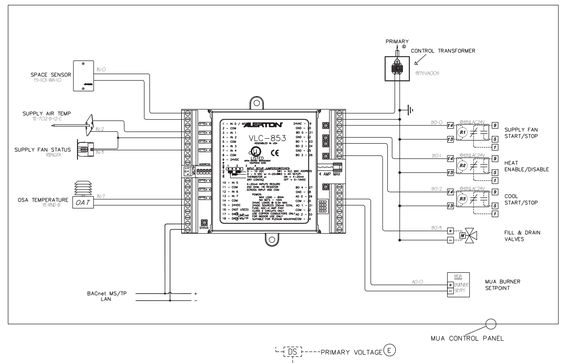

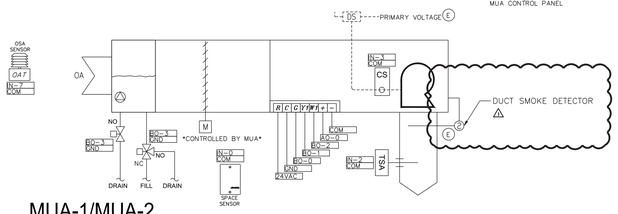

MUA-1/MUA-2 TYPICAL MUA CONTROL

NOT TO SCALE

2 / TC1.1

AC UNIT W/ ECONOMIZER SEQUENCE OF OPERATION

WARMUP CYCLE:

1. ROOM THERMOSTAT STARTS SUPPLY AIR FAN AND CYCLES HEATING STAGES AS REQUIRED TO REACH "OCCUPIED CYCLE" TEMPERATURE SETPOINT AT PROGRAMMED TIME OF OCCUPANCY
2. ECONOMIZER DAMPER REMAINS CLOSED.

OCCUPIED CYCLE:

1. SUPPLY AIR FAN SHALL START, IF NOT ALREADY RUNNING THROUGH "WARM-UP CYCLE", AT PROGRAMMED TIME OF OCCUPANCY.
2. ECONOMIZER DAMPER OPENS TO MINIMUM OSA POSITION.
3. THE HEATING STAGES SHALL CYCLE TO MAINTAIN THE CURRENT OCCUPIED HEATING SETPOINT.
4. WHENEVER OUTSIDE TEMPERATURE IS LESS THAN THE ECONOMIZER OSA LOCKOUT SETPOINT, THE ECONOMIZER DAMPERS SHALL BE USED AS THE FIRST STAGE OF COOLING.
5. ONCE THE ECONOMIZER HAS REACHED 100%, OR HAS BEEN LOCKED OUT, THE COOLING STAGES SHALL CYCLE TO MAINTAIN THE CURRENT OCCUPIED COOLING SETPOINT.

UNOCCUPIED CYCLE:

1. UNIT STOPS OPERATION AT PROGRAMMED TIME.
2. ECONOMIZER DAMPERS CLOSE.
3. UNIT SHALL CYCLE HEATING/COOLING STAGES TO MAINTAIN RESPECTIVE UNOCCUPIED HEATING/COOLING SETPOINTS.
4. A MOMENTARY PUSH-BUTTON AFTER HOURS OVERRIDE SHALL PLACE THE UNIT INTO OCCUPIED MODE FOR A PROGRAMMED LENGTH OF TIME.

SAFETY CONTROL:

1. AC UNIT INTERNAL SAFETY DEVICES DE-ENERGIZES UNIT.

OPERATORS TERMINAL:

1. SEE "TEMPERATURE CONTROL AND EMCS GENERAL NOTES".
2. FAN COMMAND (ON/OFF).
3. COOLING COMMAND (ON/OFF).
4. HEATING COMMAND (ON/OFF).
5. ECONOMIZER POSITION (0-100%).
6. CURRENT SUPPLY AIR TEMPERATURE (°F)
7. CURRENT RETURN AIR TEMPERATURE (°F)
8. ALARM SUPPLY AIR TEMPERATURE (HIGH/LOW).
9. ALARM SPACE TEMPERATURE (HIGH/LOW).

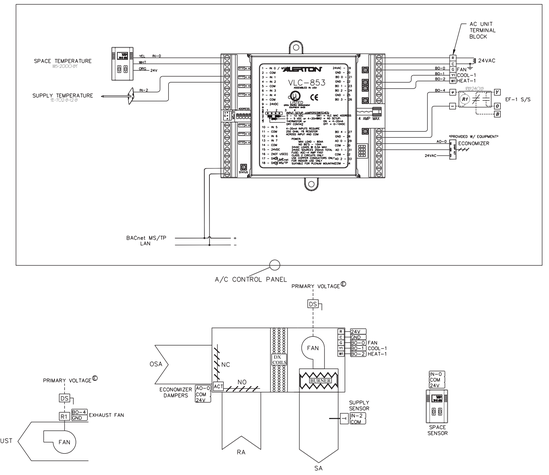

AC UNIT W/ ECONOMIZER CONTROL

NOT TO SCALE

3 / TC1.1

VEHICLE EXHAUST FAN SEQUENCE OF OPERATION

VEHICLE EF CONTROL:

1. WHENEVER SWITCH IS ACTIVATED, THE ASSOCIATED VEHICLE EXHAUST FAN SHALL START.

MUA CONTROL:

1. WHENEVER THE VEHICLE EXHAUST FAN(S) STARTS, MUA-1 SUPPLY FAN SHALL START.
2. IF THE OUTSIDE AIR TEMPERATURE IS GREATER THAN 78°F(ADJ.), THE MAU EVAPORATIVE COOLING SHALL BE ENABLED AND CYCLED TO MAINTAIN A DISCHARGE AIR SETPOINT OF 70°F(ADJ.).

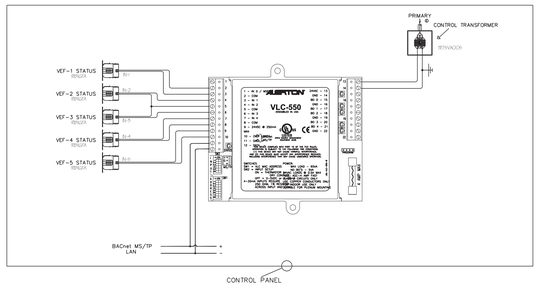

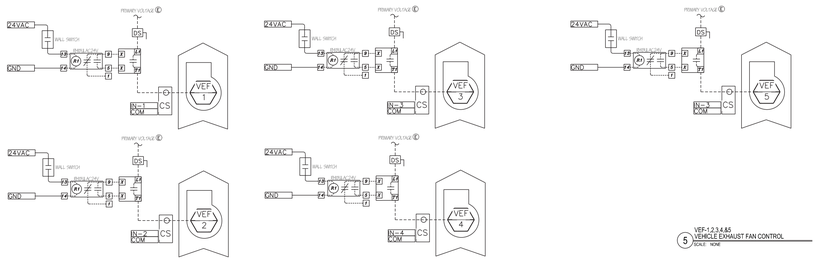

5 VEF-1,2,3,4&5 VEHICLE EXHAUST FAN CONTROL
SCALE: NONE

AC UNIT W/ ECONOMIZER CONTROL

NOT TO SCALE

4 / TC1.1

WELDING EXHAUST FAN SEQUENCE OF OPERATION

VEHICLE EF CONTROL:

1. WHENEVER SWITCH IS ACTIVATED, THE ASSOCIATED EXHAUST FAN SHALL START.

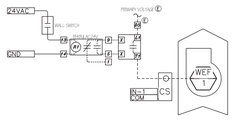

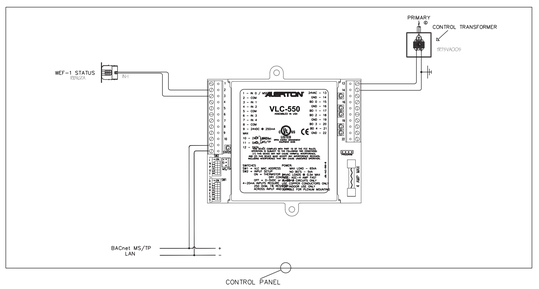

WELDING EXHAUST CONTROL

NOT TO SCALE

5 / TC1.1

AINSWORTH ASSOCIATES
MECHANICAL ENGINEERS
3741 BUSINESS DR.
SACRAMENTO, CA 95820
TEL: 916-737-6014
FAX: 916-737-6015
1420 HOLCOMB AVE., SUITE 201
RENO, NV 89502
TEL: 775-329-9100
FAX: 775-329-9105
www.aa-mc.com

JOB: 2013-056

GML ARCHITECTS · LLC
architects & planners
1575 DELUCCHI LN · SUITE 120
RENO · NEVADA 89502
P · 775 · 829 · 8814
F · 775 · 829 · 8828

STEVEN H. AINSWORTH
Exp. 12-31-14
MECHANICAL
No. 8139
STATE OF NEVADA
6.4.14

CARSON CITY FLEET MAINTENANCE FACILITY EXPANSION

CARSON CITY, NEVADA

DATE	6-2-14
JOB NO	796
DRAWN	JSH/ER
CHECKED	SA

1 BUILDING DEPARTMENT COMMENTS 4/24/14

TEMPERATURE CONTROLS

TC1.1

LUBRICATION HOSE REEL LHR-1

MODEL NUMBERS ARE GRACO

SERVICE	HOSE REEL WITH HOSE MODEL #	HOSE REEL SIZE	HOSE LENGTH FEET	PRESSURE RATING	INLET CONNECTION SIZE INCHES	OUTLET CONNECTION SIZE INCHES	REEL ENCLOSURE MODEL #	HOSE INLET KIT MODEL #	HOSE DISCHARGE DEVICE	HOSE DISCHARGE MODEL #
AIR	HPL65F	SD 20	50	300	1/2	1/2	24A949	218549	QUICK CONNECT	MATCH EXISTING
GLYCOL	HPL65F	SD 20	50	300	1/2	1/2	24A949	218549	ELECTRONIC METER	238640
MOTOR OIL	HPM65F	SD 20	50	2000	1/2	1/2	24A949	218549	ELECTRONIC METER	238640
MOTOR OIL	HPM65F	SD 20	50	2000	1/2	1/2	24A949	218549	ELECTRONIC METER	238640
MOTOR OIL	HPM65F	SD 20	50	2000	1/2	1/2	24A949	218549	ELECTRONIC METER	238640
AUTO TRANS FLUID	HPM65F	SD 20	50	2000	1/2	1/2	24A949	218549	ELECTRONIC METER	238640
HYDRAULIC FLUID	HPM65F	SD 20	50	2000	1/2	1/2	24A949	218549	ELECTRONIC METER	238641
GEAR OIL	HPM65F	SD 20	50	2000	1/2	1/2	24A949	218549	ELECTRONIC METER	238641

NOTES

1. FURNISH ELECTRONIC METERS WITH LITHIUM BATTERIES
2. FURNISH HOSE REEL ENCLOSURE ASSEMBLY WITH 1 SET OF END PANELS MODEL 24A951
3. PIPING CONNECTION AT EXISTING AIR COMPRESSOR SHALL INCLUDE PRESSURE REGULATOR MODEL 244845 3/4" WITH PRESSURE GAUGE AND 106150 FILTER
4. FURNISH REEL ASSEMBLY WITH 2 MODEL 203524 SUPPORT CHANNELS
5. INSTALLATION TO INCLUDE SWIVEL CONNECTORS AT EACH DISCHARGE METER AND ALL REQUIRED FITTING AND CONNECTORS FOR A COMPLETE SYSTEM
6. HOSE REELS TO INCLUDE HOSE BALL STOPS AND HOSE GUIDES

GENERAL NOTES

1. ALL WORK SHALL COMPLY WITH ALL APPLICABLE CODES, SPECIFICATIONS, LOCAL ORDINANCES, AND INDUSTRY STANDARDS.
2. COORDINATE EXACT LOCATION OF EQUIPMENT AND ALL PENETRATIONS THROUGH ROOF, FLOORS, AND WALLS WITH STRUCTURAL DRAWINGS PRIOR TO ANY ROUGH-IN.
3. COORDINATE THE PLACEMENT OF MECHANICAL EQUIPMENT WITH PLUMBING AND ELECTRICAL SECTIONS PRIOR TO BEGINNING WORK.
4. COORDINATE ALL PIPE ROUTING WITH OTHER BUILDING COMPONENTS.
5. ALL THERMOSTATS MOUNTED ON EXTERIOR WALLS SHALL HAVE AN INSULATED BASE.
6. PROVIDE MIN. CODE AND MANUFACTURERS RECOMMENDATIONS ON CLEARANCES FOR ALL EQUIPMENT.
7. VERIFY EXACT LOCATION, INVERT ELEVATION, SIZES, AND POINT OF CONNECTION OF ALL EXISTING UTILITIES PRIOR TO ROUGH-IN OF ANY PIPING.
8. SEE ARCHITECTURAL DRAWINGS FOR EXACT LOCATIONS AND MOUNTING HEIGHTS OF PLUMBING FIXTURES TO MEET ADA REQUIREMENTS.
9. ALL WATER PIPING IN EXTERIOR WALLS SHALL BE INSULATED AND INSTALLED INSIDE THE BUILDING INSULATION.
10. COORDINATE THE ROUTING OF PLUMBING WITH DUCTWORK AND ELECTRICAL SECTIONS PRIOR TO BEGINNING WORK.
11. INSULATE P-TRAP, HOT, AND COLD WATER SUPPLIES ON HANDICAP LAVATORIES AND SINKS WITH TRU-BRO "SOFT GUARD PLUS." PROTECTION SHALL MEET ASTM E84 FLAME/SMOKE REQUIREMENTS.
12. HANDI-CAP WATER CLOSETS SHALL HAVE TANK CONFIGURED TO PROVIDE FLUSH HANDLE FACING THE ACCESS SIDE OF WATER CLOSET.
13. PROVIDE ALL PLUMBING FIXTURES AND EQUIPMENT WITH ACCESSIBLE STOPS.
14. ALL PIPING WORK SHALL BE COORDINATED WITH ALL TRADES AND EXISTING CONDITIONS. OFFSETS IN PIPING AROUND OBSTRUCTIONS SHALL BE PROVIDED AS REQUIRED.
15. SLOPE ALL SEWER AND WASTE LINES A MINIMUM OF 1/4" PER FT.
16. ALL PIPING SHALL NOT OBSTRUCT ACCESS OR REMOVAL OF MECHANICAL EQUIPMENT.
17. ALL EQUIPMENT AND MATERIALS SHALL BE INSTALLED IN ACCORDANCE WITH MANUFACTURER'S PRINTED INSTRUCTIONS.
18. DO NOT FABRICATE PIPING FROM THE DRAWINGS. SPACE ALLOCATION SHALL BE DETERMINED IN THE FIELD AND COORDINATED WITH OTHER TRADES PRIOR TO FABRICATION.
19. PROVIDE WALL CLEANOUTS FOR ALL SINKS AND URINALS.
20. ALL METAL PIPE (CAST IRON, STEEL, COPPER, ETC.) BURIED BELOW SLAB OR GRADE SHALL BE PROTECTED FROM CORROSION WITH CHRISTY'S POLYETHYLENE PIPE ENCASEMENT AND WRAP.
21. KEEP ROOFTOP EXHAUST TERMINATIONS A MINIMUM 15 FEET FROM OUTSIDE AIR INTAKES.
22. KEEP OUTSIDE FLUE/VENT TERMINATIONS A MINIMUM 12" ABOVE AIR OPENINGS INTO BUILDING.
23. COORDINATE EXACT LOCATION OF PENETRATIONS THROUGH CONCRETE SLAB, SHEAR WALLS AND BLOCK WALLS WITH STRUCTURAL DRAWINGS PRIOR TO ANY ROUGH-IN.
24. FOR ALL WALL HUNG FIXTURES, PROVIDE A 1/8" x 6" BACKING PLATE BOLTED TO A MINIMUM OF 4 STUDS. PROVIDE CONCEALED ARMS FOR LAV'S BOLTING TO BACKING PLATE.

PLUMBING ROUGH-IN SCHEDULE

ABBR.	FIXTURE	ROUGH-IN SIZES (INCHES)					COMMENTS
		HW	CW	V	TRAP	S/W	
WC-1	WATER CLOSET	-	1	2	INTEG.	4	WALL HUNG, FLUSH VALVE, ADA
U-1	URINAL	-	3/4	2	INTEG.	2	WALL MOUNT
F-D	FLOOR DRAIN	-	-	2	2	2	WITH TRAP PRIMER CONNECTION WHERE NOTED
S-1	SINK	1/2	1/2	2	1-1/2 x 2	2	DOUBLE COMPARTMENT S.S. COUNTERTOP
FS-1	FLOOR SINK	-	-	2	2	2	
HB-1	HOSE BIBB	-	3/4	-	-	-	EXTERIOR FREEZE PROOF
HB-2	HOSE BIBB	-	3/4	-	-	-	INTERIOR
TD-1	TRENCH DRAIN	-	-	-	-	4	
WF-1	WASH FOUNTAIN	1	1	2	2	2	SEMI-CIRCULAR, INFRARED ACTIVATION
HB-2	HOSE BIBB	-	3/4	-	-	-	INTERIOR
WH-1	WATER HEATER	1-1/4	1-1/4	-	-	-	

PLUMBING FIXTURES

WC-1 WATER CLOSET (ADA)
AMERICAN STANDARD MODEL 3351.160 AFWALL 1.6 GPF WALL HUNG VITREOUS CHINA TOILET WITH ELONGATED BOWL. FURNISH WITH OLSONITE #10SSCT TOILET SEAT, ZURN CARRIER, AND ZURN FLUSH VALVE.

U-1 URINAL
AMERICAN STANDARD MODEL #6590.005 "WASHBROOK" 0.5 GPF URINAL. FURNISH WITH ZURN #Z-6003-EWS 0.5 GPF FLUSH VALVE AND ZURN CARRIER.

L-1 LAVATORY (ADA)
1
AMERICAN STANDARD MODEL #0476.028 AQUALYN VITREOUS CHINA COUNTER MOUNTED LAVATORY. FURNISH WITH AMERICAN STANDARD #6055.205 INNSBROOK FAUCET WITH 1.5 GPM FLOW AERATOR, GRID STRAINER, 17 GAUGE CHROME PLATED P-TRAP, TRU-BRO P-TRAP HOT AND COLD WATER SUPPLY ADA INSULATION AND MCQUIRE ANGLE STOPS WITH SUPPLIES.

S-1 SINK
AMERICAN STANDARD MODEL #7182.803 "CHANDLER" AMERICAST SINK. FURNISH WITH #4331.013 BASKET STRAINER, #2475.500 FAUCET, 17 GA. CHROME PLATED BRASS P-TRAP AND MCQUIRE ANGLE STOPS WITH SUPPLIES.

WF-1 WASH FOUNTAIN
BRADLEY MODEL #WF2804, 54" SEMI-CIRCULAR STAINLESS STEEL WASH FOUNTAIN. FURNISH WITH INFRA-RED CONTROLS, THERMOSTATIC MIXING VALVE AND METAL CLAD LIQUID SOAP DISPENSER.

TG-1 TRAP GUARD
SURE SEAL SS2009V 2" SS3000V 3" TRAP GUARD FOR CAST IRON PIPE.

TD-1 TRENCH DRAIN
ZURN MODEL NO. Z-806-DG 6" WIDE PRE SLOPED TRENCH DRAIN WITH CLASS "E" DUCTILE IRON SLOTTED GRATE AND OUTLET FITTING. SEE PLANS FOR LENGTH.

WHA-X WATER HAMMER ARRESTOR
SIOUX CHIEF "HYDRA-RESTER" PISTON STYLE WATER HAMMER ARRESTOR. PDI STANDARD AS NOTED ON DRAWINGS.

FS-1 EMERGENCY EYEWASH/SHOWER
HAWS MODEL #8300-8309 COMBINATION EMERGENCY EYE-WASH/SHOWER. FURNISH WITH MODEL #9202E THERMOSTATIC MIXING VALVE, HOLD OPEN VALVES AND SIGNAGE.

WH-1 WATER HEATER
A.O. SMITH MODEL #DSE-100, 100 GALLON ELECTRIC WATER HEATER. 9KW AT 230V/3 PHASE. 1200 LBS OPERATING WEIGHT.

BFP-1 BACKFLOW PREVENTER
WILKINS MODEL #975XL REDUCED PRESSURE BACKFLOW PREVENTER COMPLETE WITH INTEGRAL CHECK DRAIN AND SHUTOFF. FURNISH WITH AIR GAP FITTINGS.

FD-1 FLOOR DRAIN
ZURN MODEL Z-415 WITH TYPE "B" STRAINER. FURNISH WITH CAST TRAP WITH TRAP PRIMER CONNECTION.

FS-1 FLOOR SINK
ZURN MODEL Z-1900, 12" X 12" X 6" ENAMELED CAST IRON. FURNISH WITH STRAINER, GRATE AS REQUIRED, CAST TRAP AND TG-1 TRAP GUARD.

CP-1 CIRCULATOR PUMP
GRUNDFOS MODEL UP15-18-B5, 1GPM AT 10 FEET. 85 WATTS AT 120V/1PN

SOI-1 SAND/OIL INTERCEPTOR
JENSEN PRECAST MODEL JP750EE - SO 750 GALLON PRECAST CONCRETE INTERCEPTOR. FURNISH WITH 2 GAS TIGHT MANHOLE COVERS WITH RISERS AS REQUIRED.

WS-1 WATER SOFTENER
CULLIGAN "GOLD SERIES" TO SOFTEN 9 GPM WITH 14 PSI PRESSURE DROP. 19,086 GR. @ 4 LB SALT DOSAGE, 4-770 GR/LB. FURNISH WITH SALT STORAGE TANK AND POWER TRANSFORMER. 35 WATTS AT 120V/1PH (PLUG). PROVIDE 25, 40 POUND BAGS OF SALT.

HB-1 HOSE BIBB
WOODFORD MODEL 17 FREEZELESS WITH INTEGRAL VACUUM BREAKER. CHROME PLATED WITH WHEEL HANDLE.

HB-2 HOSE BIBB
WOODFORD MODEL 24CP WITH VACUUM BREAKER. CHROME PLATED WITH WHEEL HANDLE.

GOP-1 GEAR OIL PUMP
1
GRACO "FIRE BALL 300", 2.8 GPM AT 80 CPM, 900 PSI MAXIMUM FLUID PRESSURE. 3 INCH AIR MOTOR 27 SCFM AT 40-180PSI. FURNISH WITH AIR PRESSURE REGULATOR WITH PRESSURE GUAGE. COORDINATE INLET LINE LENGTH WITH EXISTING STORAGE TANK.

PLUMBING LEGEND & ABBREVIATIONS

ALL ITEMS SHOWN IN THIS LEGEND ARE NOT NECESSARILY USED ON THE DRAWINGS.

ABBREV.	SYMBOL	DESCRIPTION
S OR W		SOIL, WASTE OR SEWER BELOW GRADE
S OR W		SOIL, WASTE OR SEWER ABOVE GRADE
RWL	RWL	RAIN WATER LEADER
SD	SD	STORM DRAIN BELOW GRADE
G	G	LOW PRESSURE NATURAL GAS
V		VENT
CW		COLD WATER
HW		HOT WATER (110°, 120°, OR 140° AS NOTED)
HWR		HOT WATER RETURN
FL	FL	FIRE LINE
D	D	DRAIN
GV		GATE VALVE
CV		CHECK VALVE
BV/SOV		BALL VALVE/SHUT OFF VALVE
GC		GAS COCK
GPR		GAS PRESSURE REGULATOR
PRV		PRESSURE REDUCING VALVE
STR		STRAINER
TH.		THERMOMETER
P & TR		PRESSURE & TEMPERATURE RELIEF VALVE
PG		PRESSURE GAUGE WITH GAUGE COCK
FD		FLOOR DRAIN
FS		FLOOR SINK
F, GCO OR COTG		FLOOR, GRADE CLEANOUT, CLEANOUT TO GRADE
HB		HOSE BIBB
LW	LW	LANDSCAPE WATER
WCO		WALL CLEANOUT
UN		UNION
VTR		VENT THRU ROOF
RD		ROOF DRAIN
AFS		AUTOMATIC FIRE SPRINKLER RISER
TYP.		TYPICAL
REF.		REFERENCE
I.E.		INVERT ELEVATION
TA		TO ABOVE
FA		FROM ABOVE
FB		FROM BELOW

DRAWING INDEX

P0.1 - PLUMBING LEGEND, GENEAL NOTES, ROUGH-IN, AND INDEX
P1.1 - PLUMBING DEMOLITION FLOOR PLANS
P2.1 - PLUMBING FLOOR PLANS
P2.2 - ENLARGED PLUMBING PLANS
P6.1 - PLUMBING DETAILS

AINSWORTH ASSOCIATES
MECHANICAL ENGINEERS
3741 BUSINESS DR.
SACRAMENTO, CA 95820
TEL: 916-737-6014
FAX: 916-737-6015
1420 HOLCOMB AVE., SUITE 201
RENO, NV 89502
TEL: 775-329-9100
FAX: 775-329-9105
www.aa-me.com
JOB: 2013-056

CML ARCHITECTS · LLC
architects & planners
1575 DELUCCHI LN · SUITE 120
RENO · NEVADA 89502
P · 775 · 829 · 8814
F · 775 · 829 · 8828

REGISTERED PROFESSIONAL ENGINEER, STATE OF NEVADA, STEVEN H. AINSWORTH, Exp. 12-31-14, MECHANICAL, No. 8139
6.4.14

CARSON CITY FLEET MAINTENANCE FACILITY EXPANSION

CARSON CITY, NEVADA

DATE	6-2-14
JOB NO	796
DRAWN	JSH/ER
CHECKED	SA

1 BUILDING DEPARTMENT COMMENTS 4/24/14

PLUMBING LEGEND, GENEAL NOTES, ROUGH-IN, AND INDEX

P0.1

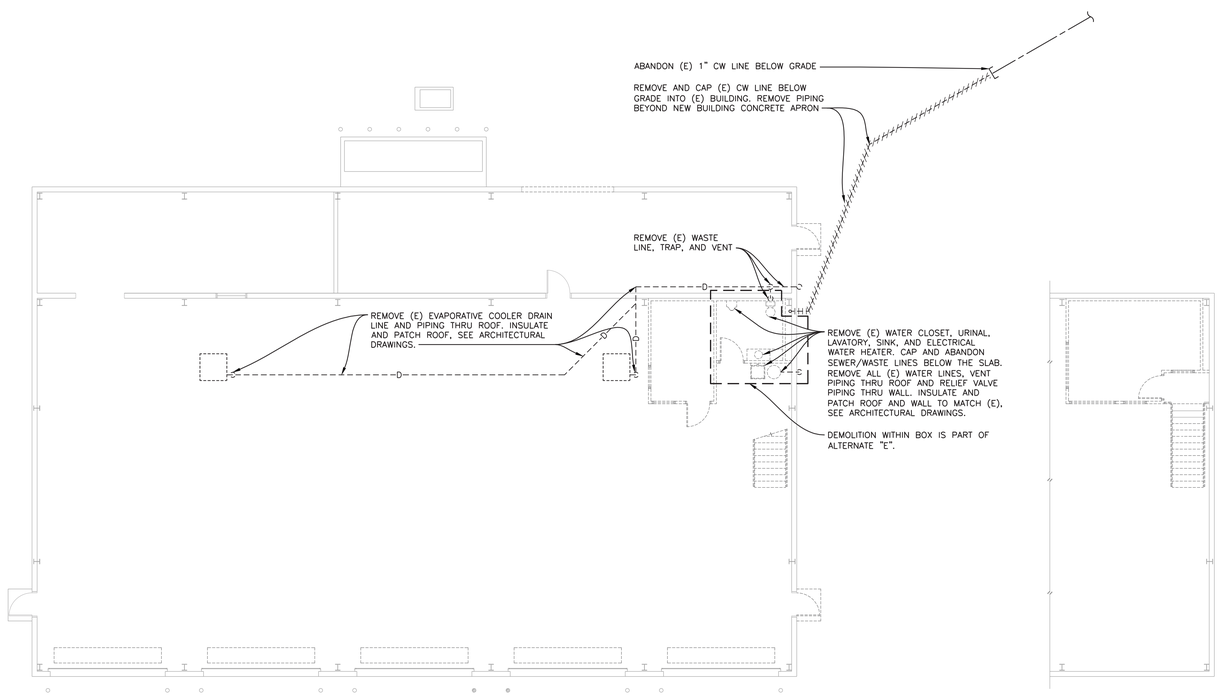

PLUMBING DEMOLITION FLOOR PLANS

SCALE: 1/8" = 1'-0"

A
P1.1

GML ARCHITECTS · LLC
architects & planners
1575 DELUCCHI LN · SUITE 120
RENO · NEVADA 89502
P · 775 · 829 · 8814
F · 775 · 829 · 8828

REGISTERED PROFESSIONAL ENGINEER · STATE OF NEVADA
STEVEN H. AINSWORTH
Exp. 12-31-14
MECHANICAL
No. 8139

6.4.14

CARSON CITY FLEET MAINTENANCE FACILITY EXPANSION

CARSON CITY, NEVADA

DATE	6-2-14
JOB NO	796
DRAWN	JSH/ER
CHECKED	SA

⚠ BUILDING DEPARTMENT COMMENTS 4/24/14

PLUMBING DEMOLITION FLOOR PLANS

P1.1

AINSWORTH ASSOCIATES
MECHANICAL ENGINEERS
3741 BUSINESS DR.
SACRAMENTO, CA 95820
TEL: 916-737-6014
FAX: 916-737-6015
1420 HOLCOMB AVE., SUITE 201
RENO, NV 89502
TEL: 775-329-9100
FAX: 775-329-9105
www.aa-me.com
JOB: 2013-056

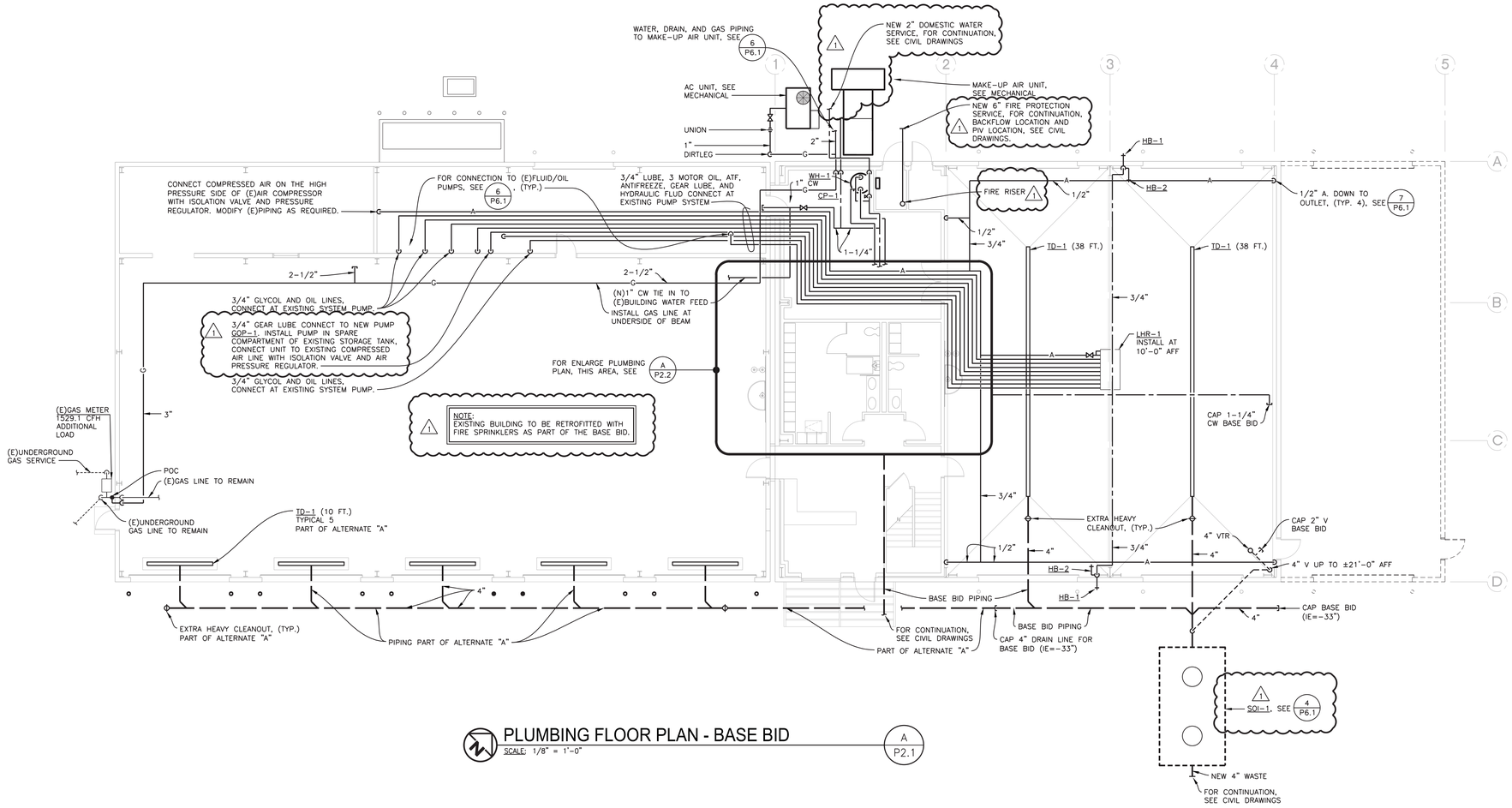

PLUMBING FLOOR PLAN - BASE BID

SCALE: 1/8" = 1'-0"

A/P2.1

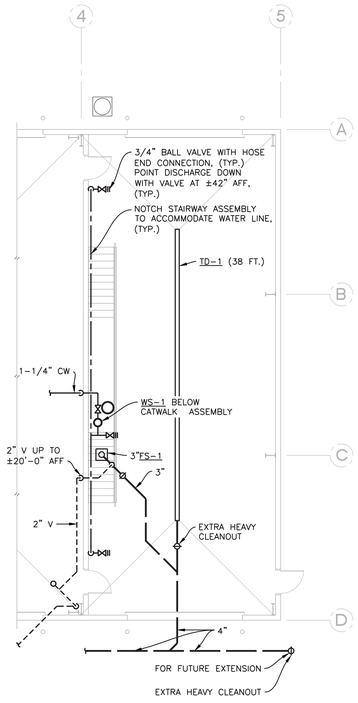

PLUMBING FLOOR PLAN ALTERNATE "B"

SCALE: 1/8" = 1'-0"

B/P2.1

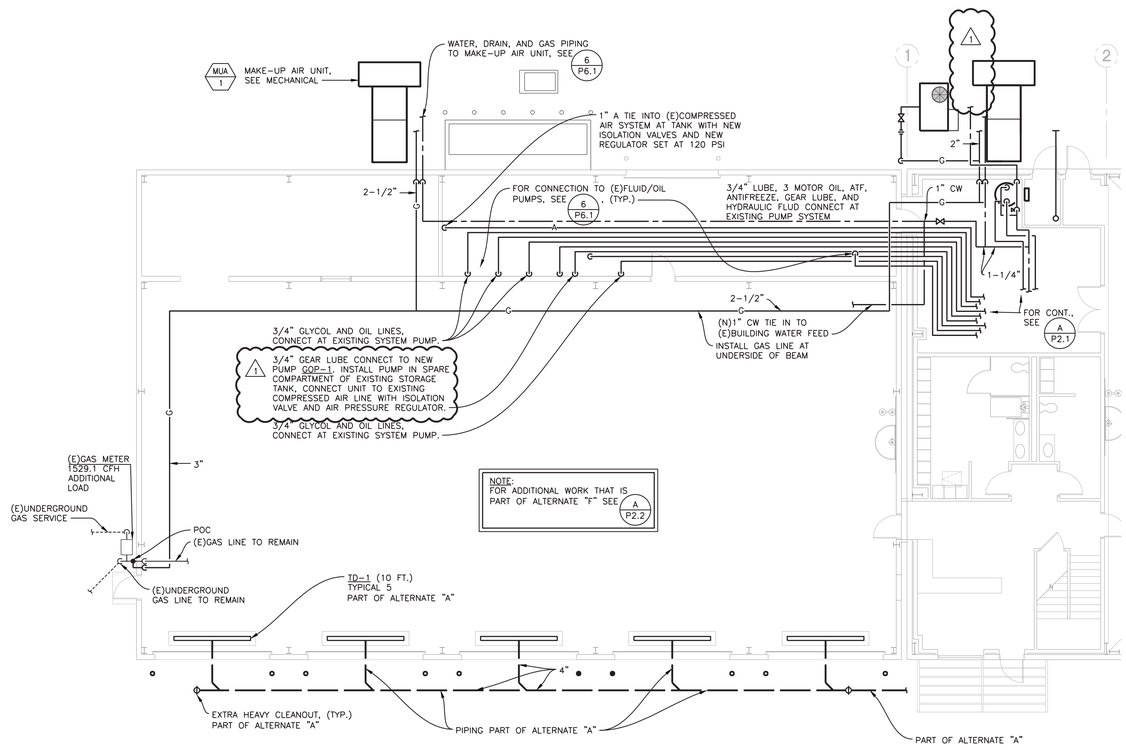

PLUMBING FLOOR PLAN - ALTERNATE "F"

SCALE: 1/8" = 1'-0"

C/P2.1

GML ARCHITECTS · LLC
architects & planners
1575 DELUCCHI LN · SUITE 120
RENO · NEVADA 89502
P · 775 · 829 · 8814
F · 775 · 829 · 8828

REGISTERED PROFESSIONAL ENGINEER, STATE OF NEVADA, STEVEN H. AINSWORTH, Exp. 12-31-14, MECHANICAL, No. 8139

6.4.14

CARSON CITY FLEET MAINTENANCE FACILITY EXPANSION

CARSON CITY, NEVADA

DATE	6-2-14
JOB NO	796
DRAWN	JSH/ER
CHECKED	SA

1 BUILDING DEPARTMENT COMMENTS 4/24/14

PLUMBING FLOOR PLANS

P2.1

AINSWORTH ASSOCIATES
MECHANICAL ENGINEERS
3741 BUSINESS DR. SACRAMENTO, CA 95820 TEL: 916-737-6014 FAX: 916-737-6015
1420 HOLCOMB AVE., SUITE 201 RENO, NV 89502 TEL: 775-329-9100 FAX: 775-329-9105
www.aa-me.com
JOB: 2013-056