EMPIRE LIFT STATION IMPROVEMENT PROJECT

PANAMINT ROAD AND BALLARAT DRIVE
CARSON CITY, NEVADA - SECTION 3, T15N, R20E
PROJECT 051404

BOARD OF SUPERVISORS

Robert L. Crowell	Mayor
Brad Bonkowski	Supervisor
Karen Abowd	Supervisor
Lori Bagwell	Supervisor
Jim Shirk	Supervisor
Alan Glover	City Clerk

DESIGNED FOR:

CARSON CITY PUBLIC WORKS DEPARTMENT
3505 BUTTI WAY
CARSON CITY, NV 89701
(775) 887-2355

GENERAL NOTES:

1. ALL WORK SHALL CONFORM TO THE "STANDARD SPECIFICATIONS FOR PUBLIC WORKS CONSTRUCTION" (SSPWC) AND THE "STANDARD DETAILS FOR PUBLIC WORKS CONSTRUCTION" (SDPWC) AS ADOPTED BY CARSON CITY. THE CONTRACTOR SHALL OBTAIN A PERMIT FOR PUBLIC WORKS CONSTRUCTION FROM THE CARSON CITY PERMIT CENTER PRIOR TO THE START OF CONSTRUCTION.
2. ALL TRAFFIC CONTROL AND BARRICADING WITHIN THE CARSON CITY RIGHT-OF-WAY SHALL CONFORM TO SECTION 100.33, 332.04 AND 332.05 OF THE STANDARD SPECIFICATIONS, PART VI OF THE MANUAL ON UNIFORM TRAFFIC CONTROL DEVICES, LATEST EDITION, AND THE UNR T2 CENTER, TEMPORARY TRAFFIC CONTROL GUIDELINES LATEST EDITION. A TRAFFIC CONTROL PLAN MUST BE SUBMITTED AND APPROVED BY THE CARSON CITY ENGINEERING DIVISION PRIOR TO ANY STREET CLOSURES.
3. THE CONTRACTOR SHALL CALL UNDERGROUND SERVICE ALERT "CALL BEFORE YOU DIG" (811) OR (1-800-227-2600) AT LEAST TWO (2) WORKING DAYS PRIOR TO START OF CONSTRUCTION AND COMPLY WITH THE REQUIREMENTS OF NRS AND NAC 455 THROUGHOUT THE COURSE OF THE WORK, SEWER SERVICE LATERALS ARE NOT OWNED OR MARKED BY CARSON CITY.
4. THE CONTRACTOR SHALL CALL THE CARSON CITY ENGINEERING DIVISION (887-2300) TWO (2) WORKING DAYS PRIOR TO THE START OF CONSTRUCTION. THE CONTRACTOR SHALL CALL ONE (1) WORKING DAY PRIOR TO REQUIRED INSPECTIONS AND TESTING. THE REQUIRED INSPECTIONS AND TESTING ARE LISTED ON THE INSPECTION RECORD ISSUED WITH EACH PERMIT. THE CONTRACTOR MUST HAVE THE PERMIT NUMBER AND THE DESCRIPTION LISTED ON THE INSPECTION RECORD TO SCHEDULE REQUIRED INSPECTIONS AND TESTING. FOR CITY CONTRACTED PROJECTS, THE CONTRACTOR SHALL SCHEDULE INSPECTIONS PER THE CONTRACT DOCUMENTS.
5. FINAL INSPECTIONS WILL BE PERFORMED BY CARSON CITY ENGINEERING DIVISION ACCORDING TO THE CARSON CITY INSPECTIONS AND TESTING PROCEDURES. NOTE: THESE PROCEDURES REQUIRE SUBMITTAL OF RECORD DRAWING PRINTS BY THE CONTRACTOR AND 10 WORKING DAYS TO PREPARE A FINAL PUNCH LIST. ALL CONDITIONS OF THE FINAL INSPECTION MUST BE COMPLETED PRIOR TO FINAL ACCEPTANCE OR ANY APPROVAL OF A CERTIFICATE OF OCCUPANCY BY THE CARSON CITY ENGINEERING DIVISION.
6. MODIFICATIONS TO THE APPROVED PLANS REQUIRES REVIEW AND APPROVAL BY THE CARSON CITY ENGINEERING DIVISION. WORK PERFORMED WITHOUT WRITTEN APPROVAL BY CARSON CITY ENGINEERING WILL REQUIRE REMOVAL AT THE CONTRACTORS EXPENSE.
7. THE APPROVED PLAN, PERMIT AND INSPECTION RECORD MUST BE ON THE JOB SITE AT ALL TIMES.
8. PLAN APPROVAL FOR SEWER AND WATER CONSTRUCTION SHALL EXPIRE ONE YEAR FROM DATE OF APPROVAL UNLESS CONSTRUCTION HAS BEEN INITIATED. (CCMC 12.06.180F, 12.01.140D)
9. THE CONTRACTOR WILL BE SOLELY AND COMPLETELY RESPONSIBLE FOR ACQUIRING A STORMWATER DISCHARGE PERMIT FROM THE NEVADA DIVISION OF ENVIRONMENTAL PROTECTION (NDEP) INCLUDING DEVELOPING, SUBMITTING AND IMPLEMENTING A STORM WATER POLLUTION PREVENTION PLAN (SWPPP). THE CONTRACTOR SHALL DEVELOP, PLACE AND MAINTAIN STORM WATER PROTECTION DEVICES IN COMPLIANCE WITH THE NEVADA CONTRACTORS FIELD GUIDE FOR CONSTRUCTION SITE BEST MANAGEMENT PRACTICES (JUNE 2008).
10. THE LOCATION OF EXISTING UTILITIES SHOWN ON THESE DRAWINGS IS BASED ON THE BEST INFORMATION AVAILABLE TO THE ENGINEER. IT SHALL BE THE CONTRACTORS' RESPONSIBILITY TO VERIFY THESE LOCATIONS AT THE PROPOSED POINTS OF CONNECTIONS AND IN AREAS OF POSSIBLE CONFLICT WITH NEW UTILITY INSTALLATION, PRIOR TO BEGINNING CONSTRUCTION. POTHOLING IS REQUIRED. SHOULD THE CONTRACTOR FIND ANY DISCREPANCIES BETWEEN THE CONDITIONS EXISTING IN THE FIELD AND THE INFORMATION SHOWN ON THESE DRAWINGS, HE SHALL NOTIFY THE ENGINEER BEFORE PROCEEDING WITH CONSTRUCTION.
11. THE CONTRACTOR WILL BE SOLELY AND COMPLETELY RESPONSIBLE FOR THE CONDITIONS OF THE JOB SITE, INCLUDING SAFETY OF ALL PERSONS AND PROPERTY DURING PERFORMANCE OF THE WORK. THIS REQUIREMENT WILL APPLY CONTINUOUSLY AND NOT BE LIMITED TO NORMAL WORKING HOURS. THE CONTRACTOR SHALL BE RESPONSIBLE FOR THE DESIGN AND CONSTRUCTION OF PROPER SHORING OF TRENCHES IN ACCORDANCE WITH OCCUPATIONAL SAFETY LAWS. THE DUTIES OF THE ENGINEER DO NOT INCLUDE REVIEW OF THE ADEQUACY OF THE CONTRACTOR'S SAFETY IN, ON, OR NEAR THE CONSTRUCTION SITE.
12. SHOULD IT APPEAR THAT THE WORK TO BE DONE, OR ANY MATTER RELATIVE THERETO, IS NOT SUFFICIENTLY DETAILED OR EXPLAINED ON THESE PLANS, THE CONTRACTOR SHALL CONTACT THE ENGINEER FOR SUCH FURTHER EXPLANATIONS AS MAY BE NECESSARY.
13. ALL PVC WATER PIPELINES ARE TO BE DISINFECTED ACCORDING TO AWWA STANDARD C651 PER NAC 445A.67145 (6)(a) AND PRESSURE TESTED ACCORDING TO AWWA STANDARD C605 PER NAC 445A.67145 (7)(b).

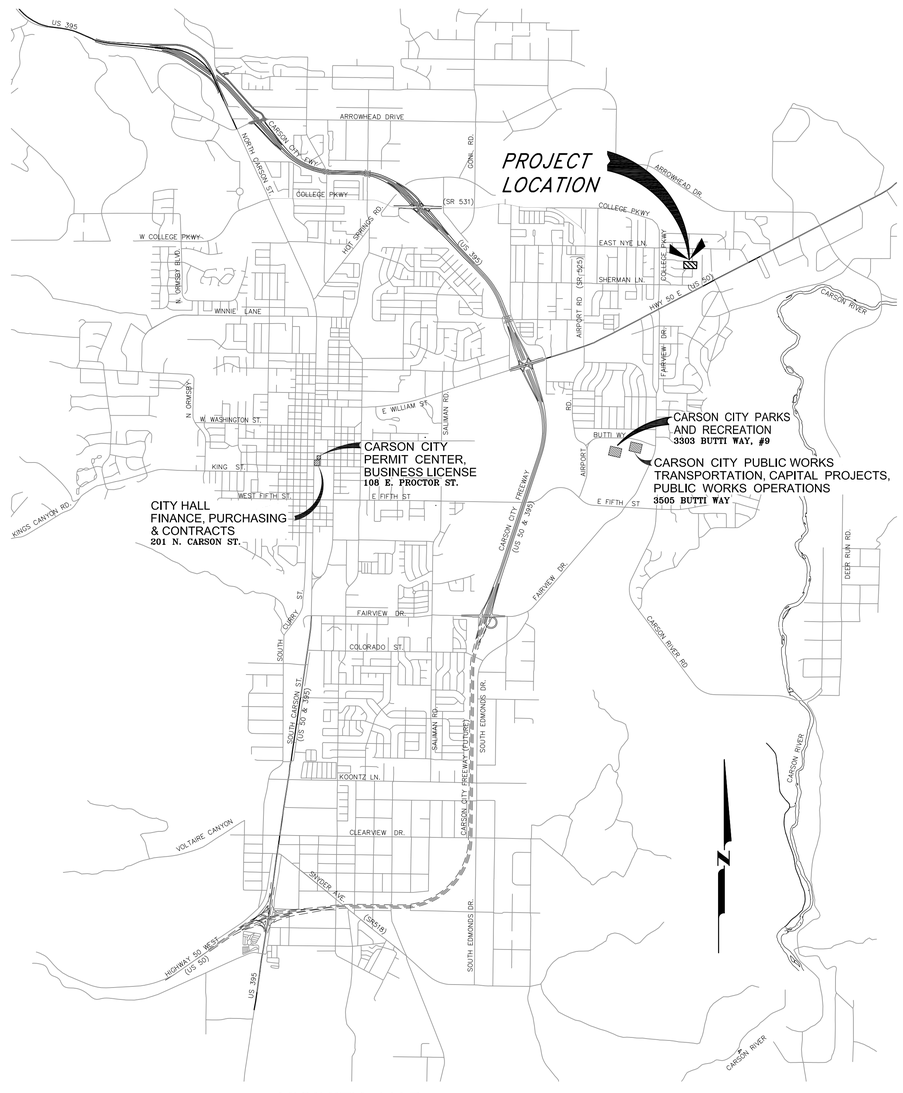

VICINITY MAP

N.T.S.

SHEET INDEX

G1	TITLE SHEET
G2	HORIZONTAL & VERTICAL CONTROL PLAN
C1	CIVIL SITE PLAN AND DETAILS
E1	ELECTRICAL LEGEND, GENERAL REQUIREMENTS, AND EQUIPMENT SCHEDULE
E2	EXISTING AND PROPOSED ELECTRICAL SITE PLANS
E3	CONTROL CABINET ELEVATION & SITE DETAILS
E4	PUMP PANEL CONTROL DIAGRAM
E5	SINGLE-LINE DIAGRAM, PANEL SCHEDULE, & SCADA DIAGRAM

REVIEWED FOR CITY REQUIREMENTS:

DARREN SCHULZ, P.E. - PUBLIC WORKS DIRECTOR DATE

Call before you Dig
Avoid cutting underground utility lines. It's costly.
Call 811 OR 1-800-227-2600

PERMIT NO. XX-XXXX

DESIGNED BY: DA
DRAWN BY: DA
CHECKED BY: JJ/DLR
DWG NO.: empire lift dci.dwg
SCALE (HORIZ): N/A
SCALE (VERT): N/A
PLOT DATE: 1/22/15

CARSON CITY
PUBLIC WORKS DEPARTMENT
3505 BUTTI WAY CARSON CITY, NEVADA 89701
PH: 887-2355 FAX: 887-2112

PROFESSIONAL ENGINEER STATE OF NEVADA
DANIEL L. ROTTER
Exp: 12-31-15
CIVIL
No. 22071
JAN. 22, 2015

REV.	DATE	DESCRIPTION	BY	APP'D

EMPIRE LIFT STATION IMPROVMENT PROJECT
PROJECT No. 051404

TITLE SHEET

SHEET G1 OF 8

I:\CAPITAL PROJECTS\Projects\051404-Empire lift\empire\02 Design\DWG\Empire Lift DA.dwg 1/22/15

HORIZONTAL AND VERTICAL CONTROL POINT DATA				
POINT #	NORTHING	EASTING	ELEVATION	DESCRIPTION
5	14743453	2301796.72	4672.28	CC031
6	14742530	2304128.17	4627.87	CC010
8	14740659	2301255.6	4635.46	CC011

BASIS OF BEARING

NORTH AMERICAN DATUM OF 1983 AS BASED ON FEDERAL BASE NETWORK/COOPERATIVE BASE NETWORK OBSERVATIONS IN 1994 (AKA NAD83-94), NEVADA STATE PLANE WEST ZONE AS DETERMINED WITH REAL TIME KINEMATIC (RTK) GPS OBSERVATIONS MADE BETWEEN FEBRUARY 2-12, 2010 WITH CORRECTIONS TRANSMITTED BY THE REGIONAL BASE NETWORK CONTINUOUSLY OPERATING REFERENCE STATION (CORS) DOT1. GROUND COORDINATES HEREON REFLECT GRID COORDINATES MULTIPLIED BY A COMBINED GRID TO GROUND FACTOR OF 1.0002 (AKA CARSON CITY MODIFIED).

BASIS OF ELEVATION

BASIS OF ELEVATION FOR THIS PROJECT IS CARSON CITY SURVEY CONTROL MONUMENT CC031, WHICH IS A 2" BRASS DISK STAMPED "CC031 2010" LOCATED AT THE NORTHWEST CORNER OF COLLEGE PARKWAY AND EAST NYE LANE IN THE BACK OF A HANDICAP SIDEWALK RAMP.

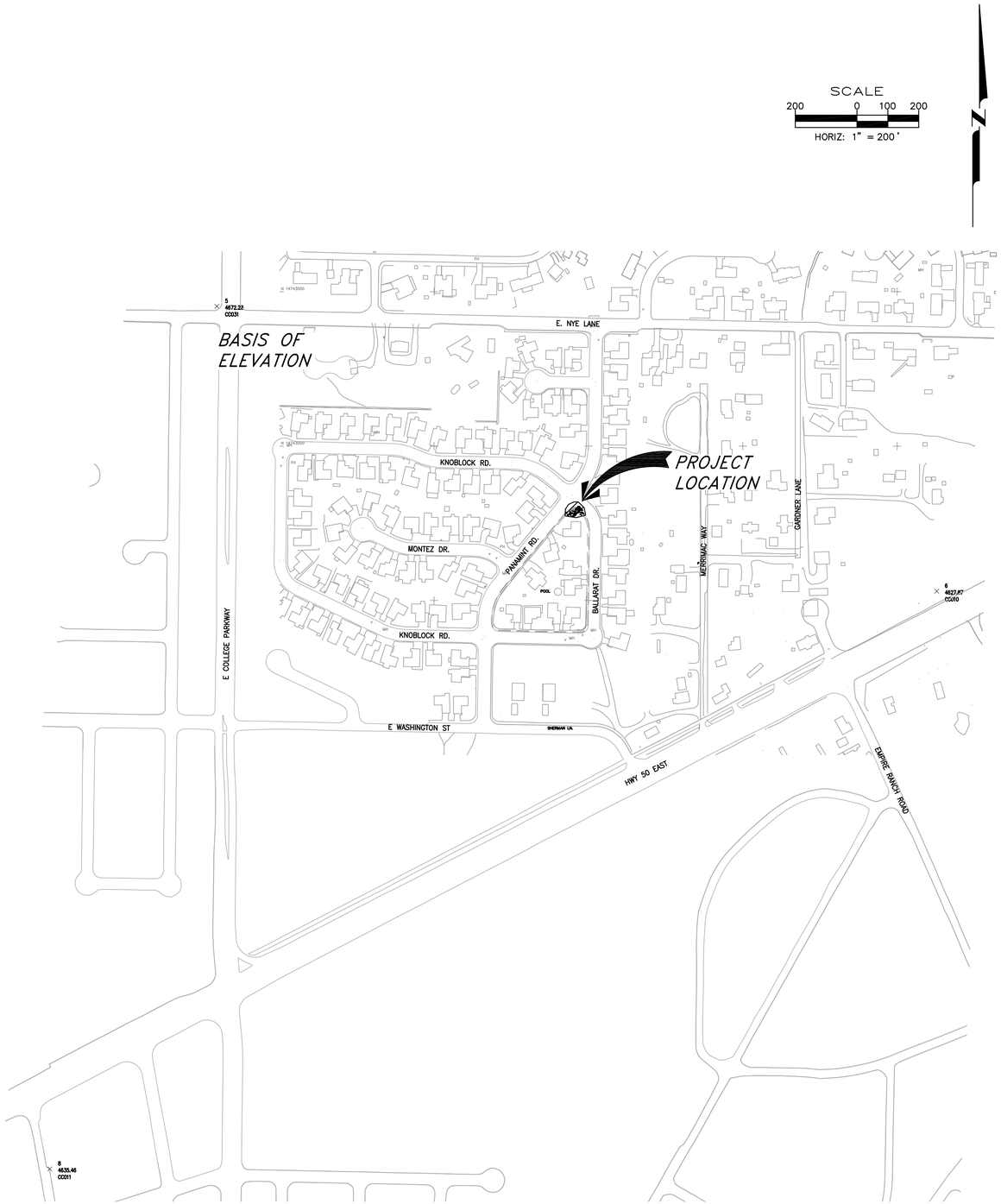

DESIGNED BY: DA
DRAWN BY: DA
CHECKED BY: JJ/DLR
DWG NO.: empire lift da.dwg
SCALE (HORIZ): 1"=200'
SCALE (VERT): N/A
PLOT DATE: 1/22/15

CARSON CITY
PUBLIC WORKS DEPARTMENT
3505 BUTTI WAY CARSON CITY, NEVADA 89701
PH: 887-2355 FAX: 887-2112

PROFESSIONAL ENGINEER STATE OF NEVADA
DANIEL L. ROTTER
Exp: 12-31-15
CIVIL
No. 22071
JAN. 22, 2015

REV.	DATE	DESCRIPTION	BY	APP'D

EMPIRE LIFT STATION
IMPROVMENT PROJECT
PROJECT No. 051404

HORIZONTAL & VERTICAL CONTROL

SHEET
G2
OF
8

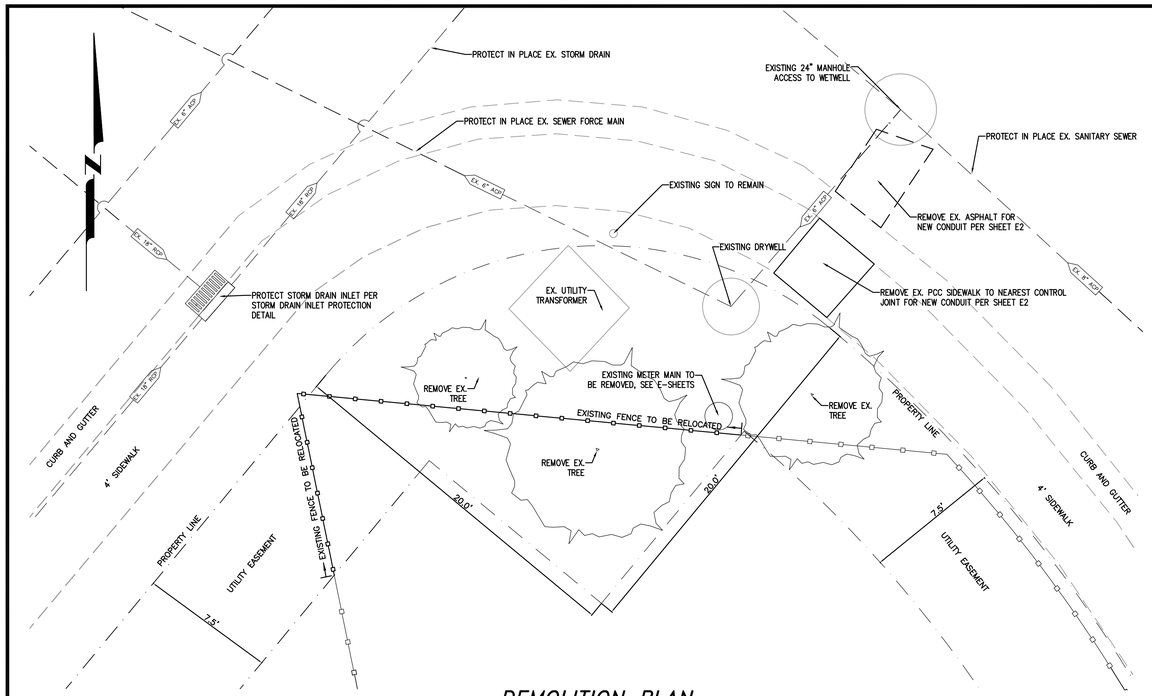

DEMOLITION PLAN

SCALE: 1" = 1/4'

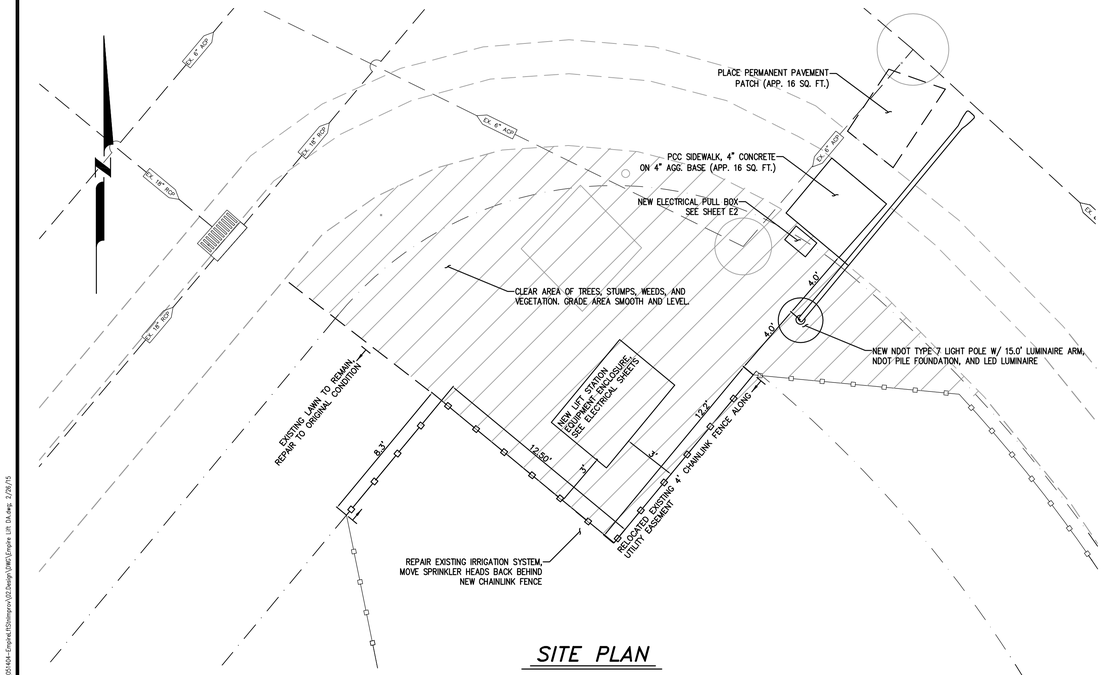

SITE PLAN

SCALE: 1" = 1/4'

SIDEWALK AND SLAB GENERAL NOTES

1. NO CONCRETE SHALL BE PLACED UNTIL FORMS AND SUBGRADE ARE INSPECTED AND APPROVED BY CARSON CITY PUBLIC WORKS.
2. PORTLAND CEMENT CONCRETE (P.C.C.) SHALL HAVE THE FOLLOWING CHARACTERISTICS: SYNTHETIC FIBER-REINFORCEMENT (AT A MINIMUM OF 1 POUND PER CUBIC YARD), WITH COARSE AGGREGATE GRADATION CONFORMING TO SIZE No. 67 PER SECTION 200.05.03 OF THE STANDARD SPECIFICATIONS, AND SHALL HAVE A 1 TO 4 INCH SLUMP, AND 4 TO 7 PERCENT ENTRAINED AIR. 4000 PSI MIN COMPRESSIVE STRENGTH @ 28 DAYS, MIN 6 SACKS OF TYPE II CEMENT PER CUBIC YARD WITH A MAX. WATER/CEMENT RATIO OF 0.45, AIR ENTRAINMENT 6% ±1.5%, SLUMP AT 1 TO 4 INCHES ALL MATERIALS SHALL CONFORM TO SSPWC SECTION 202. OF THE STANDARD SPECIFICATIONS FOR PUBLIC WORKS CONSTRUCTION.
3. ALL CONCRETE EDGING AND JOINTING SHALL BE CONSTRUCTED IN ACCORDANCE WITH STD. DETAIL C-5.1.1 AND CONFORM TO SEC. 312.09 OF THE STANDARD SPECIFICATIONS FOR PUBLIC WORKS CONSTRUCTION (SSPWC).
4. IF OBSTRUCTIONS SUCH AS INLETS, UTILITY POLES, FIRE HYDRANTS, ETC. ARE ENCOUNTERED, THE LOCATION AND DIMENSIONS MAY BE ADJUSTED UPON APPROVAL BY CARSON CITY PUBLIC WORKS. A MINIMUM SURFACE OF 5 FEET X 5 FEET CLEAR IS REQUIRED WHEN DIRECTION OF TRAVEL MAY CHANGE AND A MINIMUM SURFACE OF 4 FEET CLEAR IS REQUIRED WHERE DIRECTION OF TRAVEL IS NOT EXPECTED TO CHANGE, UNLESS OTHERWISE APPROVED BY THE CARSON CITY ENGINEER OR PUBLIC WORKS DIRECTOR.
5. EXISTING CONCRETE SHALL BE REMOVED TO A NEAT SAWCUT LINE OR NEAREST EXPANSION JOINT.
6. ALL AGGREGATE BASE SHALL BE TYPE 2, CLASS B AND SHALL CONFORM TO SEC.200.01. OF THE STANDARD SPECIFICATIONS FOR PUBLIC WORKS CONSTRUCTION (SSPWC).
7. NEW CONCRETE SHALL HAVE A HEAVY BROOM FINISH PERPENDICULAR TO SIDEWALK.

STROM DRAIN INLET PROTECTION

1. PRIOR TO ANY CONSTRUCTION ACTIVITY, THE CONTRACTOR SHALL INSTALL AND MAINTAIN ALL STORM WATER PROTECTION DEVICES IN ACCORDANCE WITH THE "NEVADA CONTRACTORS FIELD GUIDE FOR CONSTRUCTION SITE BEST MANAGEMENT PRACTICES" AND DETAILS AS SHOWN.
2. ALL INSTALLED PROTECTION DEVICES SHALL BE INSPECTED AND APPROVED BY THE CARSON CITY CONSTRUCTION INSPECTOR PRIOR TO ANY CONSTRUCTION ACTIVITY.
3. BMP'S IN ADDITION TO THOSE INDICATED ON PLAN SHEETS, AND THE CONTRACTOR'S SWPPP MAY BE REQUIRED IF THEY DON'T MEET LOCAL PERFORMANCE STANDARDS.
4. ALL BMPs MUST BE INSPECTED WEEKLY, PRIOR TO FORECASTED RAIN EVENTS, AND WITHIN 24 HOURS AFTER ANY EVENT THAT CREATES RUNOFF AT THE SITE.
5. ACCUMULATED SEDIMENT MUST BE REMOVED FROM BMPs WHEN THE DESIGN CAPACITY HAS BEEN REDUCED BY 50 PERCENT OR MORE. SEDIMENT MUST ALSO BE REMOVED WITHIN SEVEN DAYS AFTER A RUNOFF EVENT OR PRIOR TO THE NEXT FORECASTED RAIN EVENT WHICHEVER IS EARLIER.
6. IF THE ENTRANCE STABILIZATION IS NOT PREVENTING SEDIMENT FROM BEING TRACKED ONTO PAVEMENT, ALTERNATIVE MEASURES TO KEEP THE STREETS FREE OF SEDIMENT SHALL BE USED. THIS MAY INCLUDE STREET SWEEPING, AN INCREASE IN THE DIMENSIONS OF THE ENTRANCE, OR THE INSTALLATION OF A WHEEL WASH.
7. ANY ROCK THAT IS LOOSENED FROM THE ENTRANCE STABILIZATION PAD, WHICH END UP ON THE PAVED ROADWAY SHALL BE REMOVED IMMEDIATELY.
8. CONTRACTOR SHALL INSPECT LOCAL ROADS ADJACENT TO THE SITE DAILY, SWEEP OR VACUUM TO REMOVE ANY VISIBLE ACCUMULATED SEDIMENT.
9. ANY SEDIMENT THAT IS TRACKED ONTO PAVEMENT SHALL BE REMOVED BY SHOVELING, STREET SWEEPING OR VACUUMING. THE SEDIMENT COLLECTED BY SWEEPING SHALL BE REMOVED OR STABILIZED ON SITE. THE PAVEMENT SHALL NOT BE CLEANED BY WASHING DOWN THE STREET, EXCEPT WHEN SWEEPING IS INEFFECTIVE AND THERE IS A THREAT TO PUBLIC SAFETY. IF IT IS NECESSARY TO WASH THE STREETS, THE CONSTRUCTION OF A SMALL SUMP SHALL BE CONSIDERED. THE SEDIMENT WOULD THEN BE WASHED INTO THE SUMP WHERE IT CAN BE CONTROLLED
10. CONTRACTOR SHALL BE RESPONSIBLE FOR MAINTAINING DUST CONTROL WITHIN THE CONSTRUCTION LIMITS AT ALL TIMES.
11. THE CONTRACTOR OR HIS QUALIFIED AGENT IS REQUIRED TO ROUTINELY INSPECT ALL AREAS OF DISTURBED AND BARE SOIL, AREAS USED FOR STORAGE OF MATERIALS AND EQUIPMENT THAT ARE EXPOSED TO PRECIPITATION, ONSITE VEHICLE ENTRANCE AND EXIT LOCATIONS AND ALL ONSITE EROSION AND SEDIMENT CONTROL BMPS.

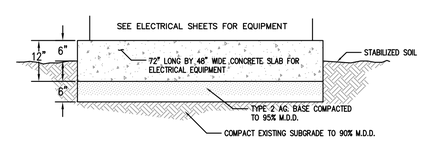

EQUIPMENT SLAB

SCALE: NTS

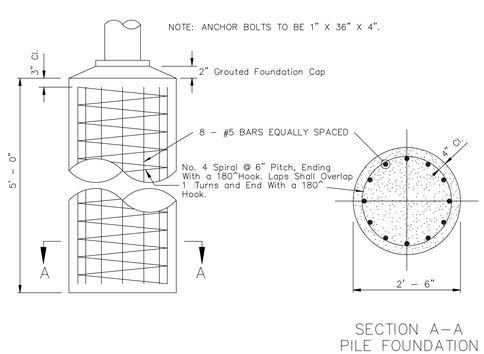

NDOT PILE FOUNDATION

SCALE: NTS

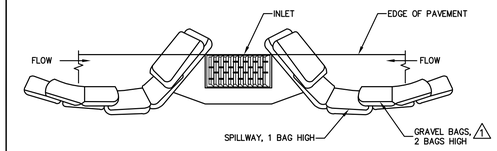

TYPICAL PROTECTION FOR INLET ON SUMP

NTS

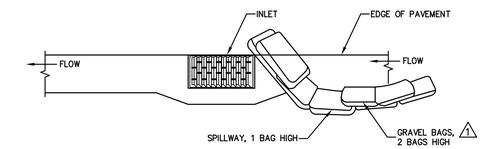

TYPICAL PROTECTION FOR INLET ON GRADE

NTS

NOTES:

1. INTENDED FOR TEMPORARY SHORT-TERM USE.
2. USE TO MANAGE CURB WATER FLOW.
3. SEDIMENT CAPTURED BEHIND GRAVEL BAGS SHALL BE REMOVED WEEKLY DURING CONSTRUCTION.
4. INLET PROTECTION MUST BE PROPERLY MAINTAINED WHILE IN PLACE AND REMOVED WHEN REQUIREMENTS OF NDEP PERMIT HAVE BEEN MET.
5. GRAVEL BAGS SHALL BE FILLED WITH 3/4 INCH WASHED ROCK.

NO.	REVISION	DATE	STANDARD DETAIL FOR PUBLIC WORKS CONSTRUCTION	SECTION CARSON CITY
1	GRAVEL BAG	05/14	STORM DRAIN INLET PROTECTION	DRAWING NO. C-4.1.7
				DATE 5/2014
APPROVED BY:		05/14		

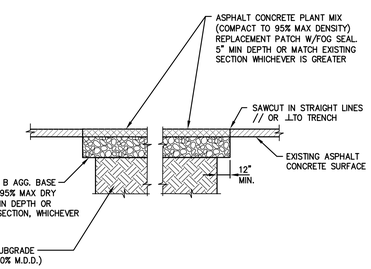

NOTES:

1. IF SAWCUT IS WITHIN 24 INCHES OF EDGE OF A.C. PAVEMENT REMOVE EXISTING PAVEMENT TO THAT EDGE AND REPLACE ENTIRE SECTION.
2. BITUMINOUS MATERIAL SHALL MEET THE REQUIREMENTS OF SECTIONS 201 AND 320 OF THE STANDARD SPECIFICATIONS FOR PUBLIC WORKS CONSTRUCTION.
3. MIXING, SPREADING, AND COMPACTING OF BITUMINOUS PAVEMENT SHALL BE DONE ONLY WHEN THE SURFACE ON WHICH THE MATERIALS ARE TO BE PLACED IS DRY AND WHEN THE ATMOSPHERIC TEMPERATURE IS ABOVE 50 DEGREES FAHRENHEIT AND HAS NOT BEEN BELOW 40 DEGREES FAHRENHEIT DURING THE PRECEDING 24 HOURS.
4. FINISHED SURFACE VARIATIONS SHALL BE 0 TO 0.25 INCHES ABOVE EXISTING SURFACE. ALL HUMPS EXCEEDING THIS TOLERANCE SHALL BE CORRECTED BY REMOVAL OF MATERIAL AND REPLACING IT WITH NEW MATERIAL. FINISHED SURFACE OF PATCH SHALL NOT BE BELOW EXISTING ADJACENT SURFACE.
5. PLANTMIX BITUMINOUS PAVEMENT SURFACE COURSE SHALL BE PG-64-22 TYPE 3 AND SUB SURFACE COURSES SHALL BE PG-64-22 TYPE 3 UNLESS OTHERWISE NOTED.
6. PLANTMIX BITMUMINOUS PAVEMENT PATCHES SHALL MATCH EXISTING SECTION OR HAVE A MINIMUM THICKNESS OF 5 INCHES, WHICHEVER IS GREATER.
7. PLANS SHALL SPECIFY PAVEMENT PATCH AND AGGREGATE BASE DEPTHS AS SPECIFIED BY THE DESIGN ENGINEER.

NO.	REVISION	DATE	STANDARD DETAIL FOR PUBLIC WORKS CONSTRUCTION	SECTION CARSON CITY
			PAVEMENT PATCH	DRAWING NO. C-5.1.6
				DATE 07/2014

DESIGNED BY: DA
DRAWN BY: DA
CHECKED BY: JJ/DLR
DWG NO.: empire lift do.dwg
SCALE (HORIZ): N/A
SCALE (VERT): N/A
PLOT DATE: 2/26/15

CARSON CITY
PUBLIC WORKS DEPARTMENT
3505 BUTTI WAY CARSON CITY, NEVADA 89701
PH: 887-2355 FAX: 887-2112

PROFESSIONAL ENGINEER STATE OF NEVADA
DANIEL L. ROTTER
Exp: 12-31-15
CIVIL
No. 22071
FEB. 24, 2015

REV.	DATE	DESCRIPTION	BY	APP'D
1	2/24/15	BLDG. DEPT. REVISIONS	DA	DR

EMPIRE LIFT STATION IMPROVEMENT PROJECT
PROJECT No. 051404

CIVIL SITE PLAN AND DETAILS

SHEET C1 OF 8

I:\CAPITAL PROJECTS\Projects\051404-Empire\130Improve\02Design\DWG\Empire Lift Dt.dwg, 2/26/15

ELECTRICAL LEGEND

SYMBOL	DESCRIPTION
A / E1	DETAIL IDENTIFICATION: TOP IS DETAIL/BOTTOM IS SHEET NUMBER
1/ E1	NOTE IDENTIFICATION: NOTE NO. 1 ON SHEET E-1
ES 1	EQUIPMENT SCHEDULE IDENTIFICATION
	DUPLEX GFCI RECEPTACLE
$	SINGLE-POLE TOGGLE SWITCH (VOLTAGE AS REQUIRED)
#	MOTOR/PUMP (# INDICATES HORSEPOWER)
M	METER
PEC	LIMIT SWITCH
C	CONTACTOR
FL	FLOW SWITCH
FS	FLOAT SWITCH
CV	CONTROL VALVE
PT	PRESSURE TRANSDUCER
LT	LEVEL TRANSDUCER
TX	INSTRUMENT TRANSMITTER
SC	SURVEILLANCE CAMERA
J	JUNCTION BOX
Th	THERMOSTAT
	GROUND
	CIRCUIT BREAKER
H O A	HAND/OFF/AUTO SWITCH
CM#	COIL-DESIGNATION
	CONTACTOR
⊠	TERMINAL LUG POINT
	FUSE
G/N	SOLIDLY GROUNDED NEUTRAL BUS
	CONDUIT UP/DOWN
	PHASE CONDUCTOR; #12 THHN IN 3/4" C. U.O.N.
	CODE SIZE GROUND BONDING CONDUCTOR PER N.E.C. TABLE 250-95
	NEUTRAL CONDUCTOR; #12 THHN IN 3/4" C. U.O.N.
	UNDERGROUND FEEDER, (2)-#12 THHN IN 3/4" C. U.O.N.
	EXPOSED RUN, PARALLEL TO STRUCTURE IN UNFINISHED AREAS; (2)-#12 THHN IN 3/4" C. U.O.N.
LA-1,3,5	HOME RUN INDICATION. EX: 3-#12'S WITH 1-#12 NEUTRAL, AND 1-GROUND IN 3/4"C. TO PANELBOARD-LA, CIRCUITS 1,3,5
8760	BELDEN #8760 2/c #16 SHIELDED 300V CABLE IN 3/4"C.
9946	BELDEN #9946 16/10c + SHIELDED 300V CABLE IN 3/4"C.
	SLASHES INDICATE NO. OF #14 MTW STRANDED CONTROL CONDUCTORS IN CONDUIT.
N.T.S.	NOT TO SCALE
C.	CONDUIT
TYP.	TYPICAL
B.C.	BARE COPPER
GRSC	GALVANIZED RIGID STEEL CONDUIT
E.C.	EMPTY CONDUIT
(E)	EXISTING
(R)	RELOCATED
(X)	DEMOLISH
(N)	NEW
N.C.	NORMALLY CLOSED
CR	CARD READER
SPD	SURGE PROTECTION DEVICE
N4X	STAINLESS STEEL NEMA-4X
AFG	ABOVE FINISHED GRADE
U.O.N.	UNLESS OTHERWISE NOTED
	RED-TRIANGLE SHUNT-TRIP BREAK-GLASS STATION

GENERAL ELECTRICAL REQUIREMENTS:

A. FURNISH ALL LABOR, MATERIAL, EQUIPMENT, TOOLS, ACCESSORIES, ETC. REQUIRED FOR A COMPLETE ELECTRICAL SYSTEM.

B. ALL WORK SHALL CONFORM WITH THE REQUIREMENTS OF THE LATEST EDITION OF THE NATIONAL ELECTRICAL CODE, NATIONAL BOARD OF FIRE UNDERWRITERS, APPLICABLE LOCAL CODES, AND POWER COMPANY STANDARDS.

C. ALL MATERIAL SHALL BE NEW AND CONFORM WITH THE REQUIREMENT OF THE UNDERWRITER'S LABORATORIES, INC.

D. WORKMANSHIP AND NEAT APPEARANCE SHALL BE OF THE SAME LEVEL OF IMPORTANCE AS ITS ELECTRICAL AND MECHANICAL EFFICIENCY.

E. COORDINATE ALL WORK WITH THAT OF OTHER CONTRACTORS ON THE JOB AND ALSO WITH THAT OF THE OWNER. ANY COST FOR EXTRA WORK OR MATERIALS RESULTING FROM LACK OF COORDINATION, SHALL BE BORNE BY THIS CONTRACTOR.

F. POWER CONDUCTORS SHALL BE COPPER #12 AWG MINIMUM. #8 AWG AND LARGER SHALL BE STRANDED. ALL CONDUCTORS TO BE TYPE XHHW-2. ALL WIRING SHALL BE INSTALLED IN CONDUIT. CONTROL CONDUCTORS TO BE #14 XHHW-2 STRANDED.

G. ALL CONDUIT WITHIN 18" OF GRADE OR FINISHED FLOOR TO BE GALVANIZED RIGID STEEL. ALL CONDUIT BELOW 18" OF GRADE TO BE PVC-TYPE SCHEDULE-40. ALL UNDERGROUND ELBOWS TO BE GALVANIZED RIGID STEEL (GRS). ALL METALLIC CONDUITS IN CONTACT WITH EARTH TO BE EITHER PVC-GRSC OR HALF-LAP WRAPPED IN SCOTCH-50 ELECTRICAL TAPE. FOR CONDUITS INSTALLED OUTDOORS, PROVIDE A WATER-TIGHT CONDUIT SYSTEM, (IMC OR GRS ONLY) INCLUDING THREADED HUBS AT EQUIPMENT PENETRATIONS, LIQUID-TIGHT CONNECTORS, & SEALS. INCLUDE 'CGB' TYPE CONNECTORS WHERE CABLES LEAVE CONDUITS & EXTEND TO SENSORS.

H. WIRING DEVICES SHALL BE HUBBELL, OR EQUAL. ALL DEVICES SHALL BE EQUAL TO THE FOLLOWING AND SHALL HAVE WHITE DEVICE PLATES:
   ENCLOSURE SWITCHES:
      A. SPST HUBBELL NO. 1221-I
   ENCLOSURE RECEPTACLES:
      A. GFCI DUPLEX 20A, 125V HUBBELL NO. GF5262-I

I. THIS CONTRACTOR SHALL GUARANTEE TO THE OWNER ALL WORK PERFORMED UNDER THIS CONTRACT TO BE FREE FROM DEFECTS IN WORKMANSHIP AND MATERIALS FOR A PERIOD OF ONE (1) YEAR FROM DATE OF FINAL ACCEPTANCE.

J. ALL CONDUCTOR CRIMPING ON CONDUCTORS #6 AWG OR GREATER TO BE HYDRAULICALLY CRIMPED, USING FULLY ANNULAR DIE-TYPE CRIMPER (MATCH COLOR TO EQUIPMENT RATING).

K. PROVIDE NEW TYPED PANEL DIRECTORIES FOR ALL NEW AND MODIFIED 120/208/240V LOAD CENTERS AND PANELBOARDS. PROVIDE BLACK PHENOLIC NAMEPLATES FOR BREAKERS INSTALLED IN 277/480V PANELS.

L. SUBMIT DIGITAL COPIES OF SHOP DRAWINGS AND/OR MANUFACTURERS DESCRIPTIVE DATA ON ALL PROPOSED ELECTRICAL EQUIPMENT, CABLING, CONDUIT, & ACCESSORIES FOR APPROVAL WITHIN THIRTY (30) DAYS AFTER AWARD OF CONTRACT. THE CONTRACTOR SHALL REVIEW ALL SHOP DRAWINGS PREPARED BY HIS SUPPLIERS AND SHALL MARK ALL COPIES AS ACCEPTABLE TO HIM. THE CONTRACTOR'S ACCEPTANCE SHALL INCLUDE CERTIFICATION THAT THE REQUIRED ELECTRICAL CONNECTIONS HAVE BEEN NOTED AND THAT EQUIPMENT CAN BE INSTALLED IN THE SPACE AVAILABLE.

M. ELECTRICAL EQUIPMENT SHALL BE AS MANUFACTURED BY EATON, SIEMENS, ALLEN-BRADLEY, OR SQUARE-D.

N. PROVIDE THE SERVICES OF A FULLY TRAINED AND EQUIPPED NETA-CERTIFIED TESTING COMPANY (TEST PERFORMED BY CONTRACTOR WILL NOT BE ACCEPTED) TO TEST, CALIBRATE, AND WHERE NECESSARY, PLACE IN OPERATION THE ELECTRICAL SYSTEM:

   (A) PHASE OVER-CURRENT DEVICES ON ALL FEEDERS.
   (B) GROUND FAULT PROTECTIVE DEVICES.
   (C) GROUND RESISTANCE TEST FOR GROUNDING ELECTRODE SYSTEMS USING FALL OF POTENTIAL METHOD.
   (D) CONDUCTOR INSULATION TESTING BY WAY OF 500VDC MEGGER.

   TESTS SHALL BE COMPLETE ENOUGH TO BE CONCLUSIVE AND TO INSURE PROPER OPERATION. THIS SHALL BE CERTIFIED IN TRIPLICATE TEST REPORTS SUBMITTED TO THE ENGINEER. ALL FAULTY EQUIPMENT SHALL BE REPLACED AND TESTED UNTIL SATISFACTORY RESULTS ARE OBTAINED. TESTS SHALL BE NON-DESTRUCTIVE AND PROCEDURES USED SHALL BE APPROVED BY THE ENGINEERING SERVICE STANDARD SCOPES OF WORK (SSW)" AND "EARTH RESISTANCE TESTING" PUBLISHED BY THE JAMES G. BIDDLE COMPANY.

O. ALL SURFACE OUTLET BOXES TO BE "FS" CAST STEEL WITH MATCHING COVERS.

P. ALL CONCRETE WORK TO BE PER CIVIL AND/OR STRUCTURAL DRAWINGS, SPECIFICATIONS, REQUIREMENTS, AND DIAGRAMS.

Q. FINAL CONDUIT ROUTING FOR NEW CONDUIT SYSTEMS TO BE DETERMINED BY ELECTRICAL CONTRACTOR; HOWEVER SEPARATE DEDICATED CONDUITS SHALL BE PROVIDED FOR ANALOG SIGNAL, DISCRETE SIGNAL, AND POWER. DO NOT USE EQUIPMENT ENCLOSURES AS PASS-THROUGH WIRE-WAY.

R. INSTALL ALL EMPTY CONDUITS WITH PULL STRING.

S. ALL COVER CONTROLS SHALL BE 30.5MM NEMA TYPE.

T. ALL REMOVED EQUIPMENT SHALL BE SALVAGED TO CARSON CITY PUBLIC WORKS PERSONNEL.

EQUIPMENT SCHEDULE

ES

ITEM	QUANTITY	DESCRIPTION
1	1	100A 240/120V 3Ø 4-WIRE NEMA-3R 7-JAW 10kAIC SELF-CONTAINED METER MAIN WITH 100A/3P MAIN CIRCUIT BREAKER AND TEST-BLOCK BYPASS. COOPER/B-LINE #U217MTBMS84.
2	1	100A 240/120V 3Ø 3-POLE NEMA-1 WALL-MOUNT CONTACTOR BASED AUTOMATIC TRANSFER SWITCH WITH MICROPROCESSOR CONTROLLER AND IN-PHASE/ TIME DELAY NEUTRAL TRANSFER. EATON #AT-C-1-C5-X-3-0100-W-S-U
3	1	100A 240V 3-POLE NEMA-3R WALL-MOUNT HEAVY-DUTY NON-FUSIBLE DOUBLE-THROW MANUAL TRANSFER SWITCH. EATON #DT-3-2-3-U-R-K, WITH 100A 240V 4-WIRE 4-POLE HEAVY-DUTY CIRCUIT BREAKING SPRING DOOR RECEPTACLE. EATON/CROUSE-HINDS #AR1041.
4	1	125A 240V 3Ø 4-WIRE INSULATED/BONDABLE SPLIT NEUTRAL INDOOR 18-CIRCUIT MAIN LUG LOADCENTER. EATON #CH18L3125C.
5	1	80kA/Ø 240V 3Ø DELTA NEMA-4 SURGE PROTECTION DEVICE. INNOVATIVE TECHNOLOGY / EATON #PT-X-080-3D101.
6	1	30A 240V NEMA SIZE 1 DUPLEX-CIRCUIT BREAKER DISCONNECT PUMP PANEL WITH NEMA-3R ENCLOSURE. EATON #EC-N-70-1-2-B-A-E
7	2	6"Hx6"Dx24"L NEMA-1 PAINTED FLAT-COVER WIREWAY. HOFFMAN #F66T124GVP WITH (2)-#F66GCPNK.
8	1	LIFT STATION EQUIPMENT ENCLOSURE - NEMA-3R PROTECTION AGAINST RAIN, SLEET, AND FORMATION OF ICE, OFF-CENTER MOUNTING-PANEL FOR EQUIPMENT, QUARTER-TURN STAINLESS-STEEL KEYLOCKING/PADLOCKING 'L'-HANDLES, & WHITE POWDER-COAT FINISH. PROVIDE, INSTALL, AND CONNECT COMPLETE: CONVENIENCE RECEPTACLES, (4)-24" 230V LED IN-CABINET LIGHTING, & 230V THERMOSTATICALLY-CONTROLLED WEATHER-PROOF PAIRED-LOUVER AND FAN SYSTEM (CAPABLE OF 108 CFM). 800W 230V HEATER WITH BRUSHED ALUMINUM HOUSING AND 230V THERMOSTAT. PROVIDE, INSTALL, AND CONNECT ALL ELECTRICAL EQUIPMENT AS DETAILED ON THE ENCLOSURE ELEVATIONS / DETAIL DRAWINGS. APPROXIMATE DIMENSIONS 60"Wx72"Hx36"D. HOFFMAN #A726036FSDAD/MOD, #A72FSCPS, (2)-#A72P60, (2)-#ASSPKH5, #TFP62, #SG061, (2)-#T10S3R, #ATEMNO, (4)-#LEDA1M35, #DAH8002A (ADDITIONAL OPTIONS AS DESCRIBED).
9	1	30"Hx24"Wx10"D NEMA-4 LP CONCEALED HINGED SCADA ENCLOSURE WITH MATCHING BACKPANEL. HOFFMAN #A30H24CLP & #A30P24.
10	1	NDOT TYPE-7 LIGHT POLE PER NDOT STANDARDS TO INCLUDE: HORIZONTAL TENON MOUNT, TYPE II DISTRIBUTION, 100 LED, 240 VOLT, SILVER FINISH, 525mA DRIVER CURRENT, LED LUMINAIRE WITH NEMA PHOTOCELL RECEPTACLE. INCLUDE A 240V PHOTOCELL AND INSTALL. CREE #BXSPRBHT2LGA40K-ULSVN.
11	1	4-20mA PVDF 1" NPT ULTRASONIC LEVEL TRANSDUCER WITH SUBMERGENCE SHIELD, 30m CABLE (VERIFY LENGTH IN FIELD), & 304 STAINLESS AIM ADAPTER WITH COUPLING. SIEMENS #7ML1106-1BA2A, #7ML1830-1BH, & #7ML1830-1AU.
12	1	100-230VAC WALL-MOUNT SINGLE-POINT ULTRASONIC LEVEL TRANSMITTER WITH 4-20mA OUTPUT. SEIMENS SITRANS HYDRO-RANGER #7ML5034-1AA01 (VERIFY EXACT REQUIREMENTS WITH OWNER & SITE CONDITIONS).
13	1	NORMALLY OPEN 600V RATED INDUSTRIAL POLYPROPYLENE SEALED FLOAT SWITCH WITH 60-FOOT CABLE (VERIFY LENGTH IN FIELD). ANCHOR SCIENTIFIC #S60ND.
14	1	90-265VAC/DC POWER TRANSDUCER & METER PANEL-MOUNTED IN PAINTED SCREW-COVER 8"x8"x8" LIFT-COVER NEMA-1 BOX. SHARK200-60-10-V1-D2-INP300S-X-X & HOFFMAN #ASE8X8X8NK. INCLUDE CURRENT TRANSFORMER KIT#CT200K.
15	1	120V 2-20A SUMP-PUMP 'RUN' CURRENT SENSOR. SSAC #ECS41BC
16	1	4-20mA 316 STAINLESS STEEL SUBMERSIBLE PRESSURE TRANSDUCER WITH 60-FOOT POLYURETHANE CABLE. KPSI (VERIFY EXACT MODEL WITH SITE CONDITIONS & OWNER).
17	2	INTRUSION ALARM MAGNETIC DOOR SWITCHES. GRI #200-36HD.
18	1	SCADA SYSTEM / RTU COMPONENTS TO INCLUDE: - PLC SCADAPAK 350/357 - DATA RADIO ENCOM COMPAKBB 4.9INT - ETHERNET SWITCH GARRETTCOM 6KL - POWER SUPPLY 120VACx24VDC 100W SCADA SYSTEM COMPONENTS TO BE PROVIDED AND INSTALLED BY CARSON CITY. CONTRACTOR TO RTU ENCLOSURE BACKPANEL TO CARSON CITY WATER SYSTEM PERSONNEL FOR INSTALLATION IN NEW SCADA ENCLOSURE.
19	1	10"x17" H-20 TRAFFIC RATED HANDHOLE WITH EXTENSION AND STEEL DIAMOND PLATE COVER MARKED "ELECTRIC". JENSEN PRECAST #HT1730-B, #HT1730-E, #HT1730-LID.

REMARKS: CONTRACTOR TO COORDINATE EQUIPMENT SCHEDULE QUANTITIES WITH ELECTRICAL DRAWINGS AND MODIFY AS REQUIRED. VERIFY PART NUMBERS AND OPTIONS WITH EXISTING CONDITIONS, DESCRIPTION, & DIAGRAMS.

Call before you Dig
Avoid cutting underground utility lines. It's costly.
Call 811 OR 1-800-227-2600

DESIGNED BY: MJJ
DRAWN BY: MJJ/MMA/SJM
CHECKED BY: MJJ
DWG NO.: E119AR
SCALE (HORIZ): SHOWN
SCALE (VERT): SHOWN
PLOT DATE: 1-27-15

JENSEN ENGINEERING INC.
Electrical Engineers
9655 Gateway Drive Reno, Nevada 89521-2988
Ph. (775) 852-2288 Fax (775) 852-3388
email: jeneng@nvbell.net web: www.jeneng.com

REGISTERED PROFESSIONAL ENGINEER
MICHAEL J. JENSEN
Exp. 6-30-15
ELECTRICAL
No. E21568
STATE OF NEVADA
1-27-15

REV.	DATE	DESCRIPTION	BY	APP'D

EMPIRE LIFT STATION IMPROVEMENT PROJECT
PROJECT No. 051404

ELECTRICAL LEGEND, GENERAL REQUIREMENTS, & EQUIPMENT SCHEDULE

SHEET E1 OF 8

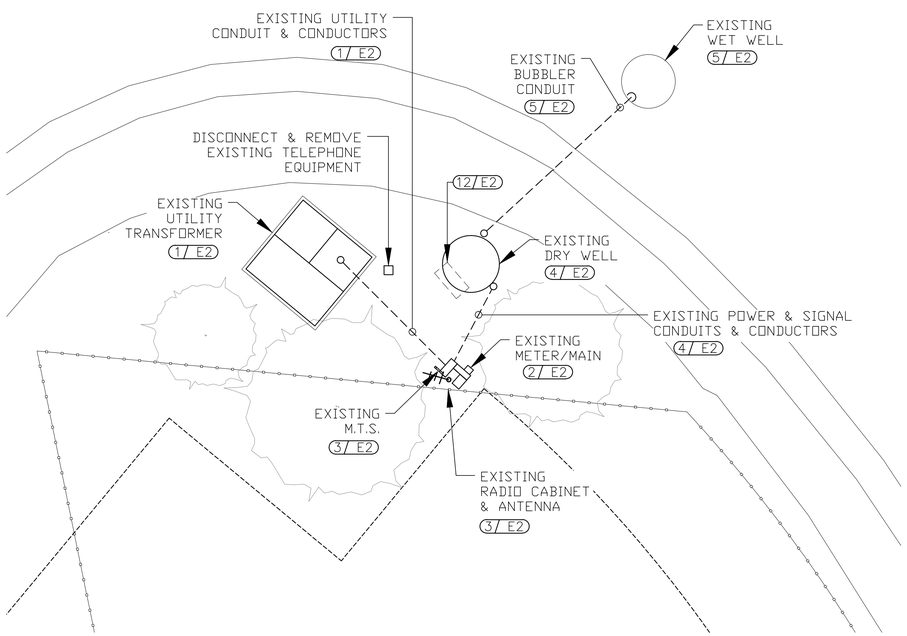

A/E2 EXISTING SITE
SCALE: 1/4"=1'-0"

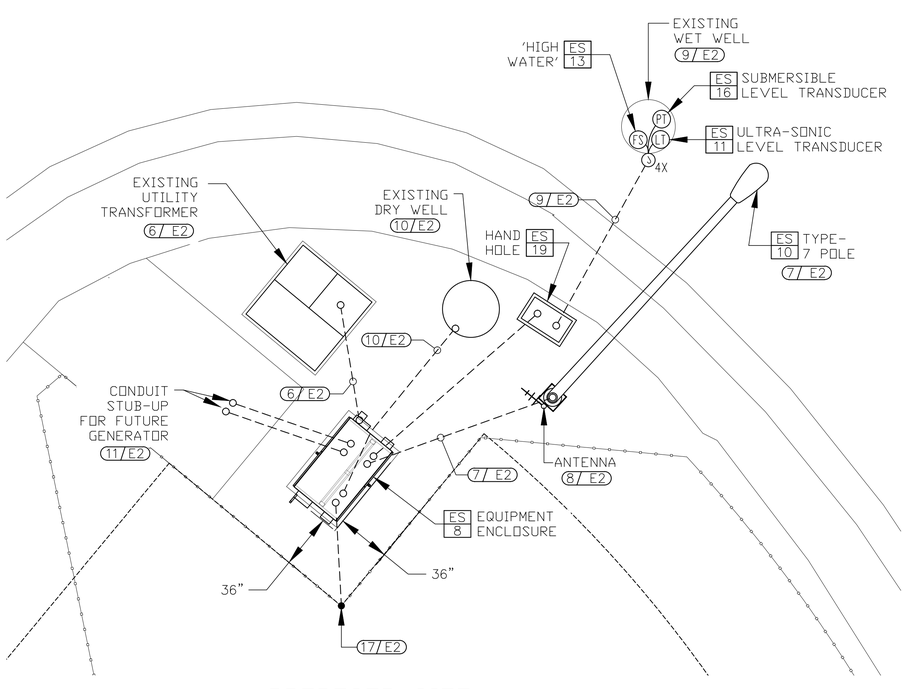

B/E2 PROPOSED SITE
SCALE: 1/4"=1'-0"

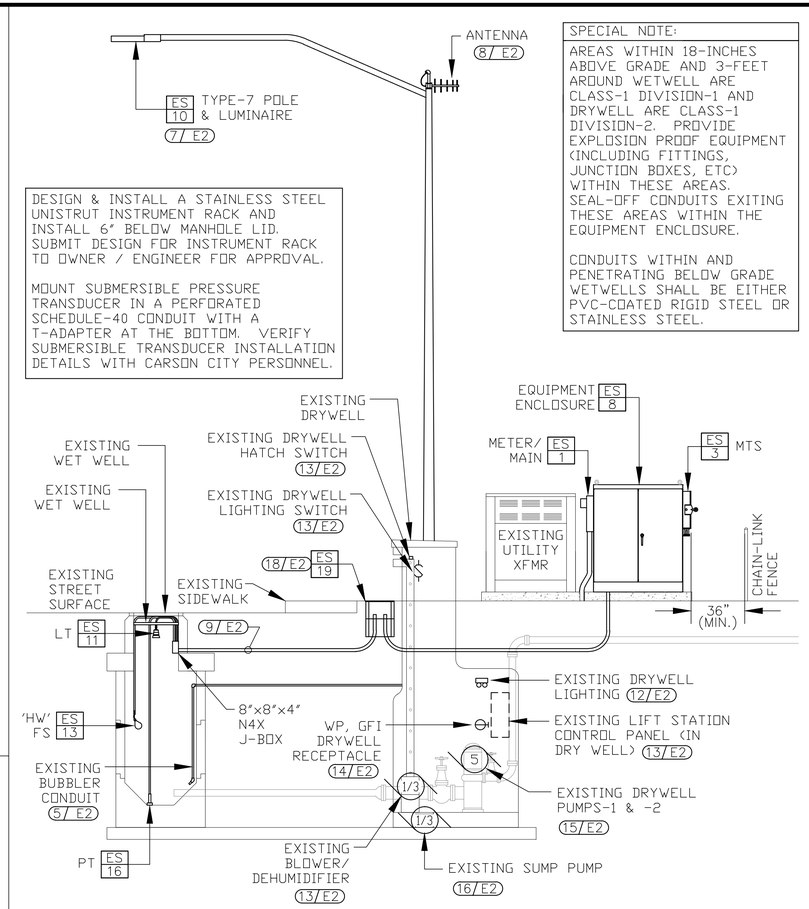

C/E2 LIFT-STATION & SITE ELEVATION
SCALE: 1/4"=1'-0"

SPECIAL NOTE:

AREAS WITHIN 18-INCHES ABOVE GRADE AND 3-FEET AROUND WETWELL ARE CLASS-1 DIVISION-1 AND DRYWELL ARE CLASS-1 DIVISION-2. PROVIDE EXPLOSION PROOF EQUIPMENT (INCLUDING FITTINGS, JUNCTION BOXES, ETC) WITHIN THESE AREAS. SEAL-OFF CONDUITS EXITING THESE AREAS WITHIN THE EQUIPMENT ENCLOSURE.

CONDUITS WITHIN AND PENETRATING BELOW GRADE WETWELLS SHALL BE EITHER PVC-COATED RIGID STEEL OR STAINLESS STEEL.

DESIGN & INSTALL A STAINLESS STEEL UNISTRUT INSTRUMENT RACK AND INSTALL 6" BELOW MANHOLE LID. SUBMIT DESIGN FOR INSTRUMENT RACK TO OWNER / ENGINEER FOR APPROVAL.

MOUNT SUBMERSIBLE PRESSURE TRANSDUCER IN A PERFORATED SCHEDULE-40 CONDUIT WITH A T-ADAPTER AT THE BOTTOM. VERIFY SUBMERSIBLE TRANSDUCER INSTALLATION DETAILS WITH CARSON CITY PERSONNEL.

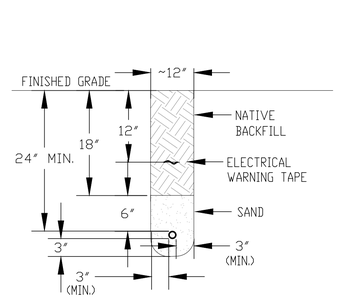

D/E3 TYPICAL BRANCH TRENCH DETAIL
SCALE: 1"=1'-0"

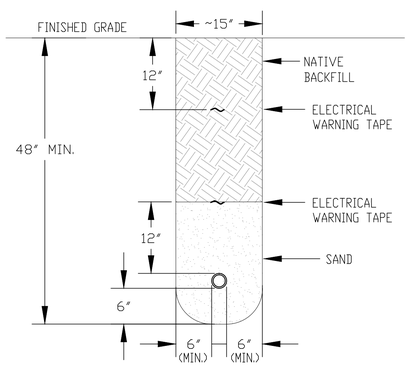

E/E2 UTILITY TRENCH DETAIL
SCALE: 1"=1'-0"

MINIMUM TRENCH REQUIREMENTS SHOWN. MODIFY TRENCH WIDTH AS NECESSARY FOR ADDITIONAL CONDUITS OR DEPTH. PROVIDE AND INSTALL PULL-LINE WITH SEQUENTIAL FOOT-MARKINGS IN ALL EMPTY CONDUITS FOR FUTURE CONDUCTOR PULLS. SEE CIVIL SPECIFICATION FOR PAVEMENT PATCH REQUIREMENTS, MATERIALS, & PLACEMENT SPECIFICATIONS FOR BEDDING AND BACKFILL.

SHEET NOTES

/E2

1. EXISTING 240/120V DELTA-HIGH LEG UTILITY TRANSFORMER TO REMAIN FOR USE WITH NEW EQUIPMENT. COORDINATE DISCONNECT OF EXISTING METERING, AND TRANSFER OF POWER TO NEW METERING WITH NV ENERGY.
2. AFTER NEW EQUIPMENT CABINET AND METER ARE INSTALLED IN-PLACE, DISCONNECT AND REMOVE EXISTING METERING EQUIPMENT.
3. AFTER NEW EQUIPMENT CABINET IS IN PLACE AND SERVICE HAS BEEN RE-ESTABLISHED, DISCONNECT AND REMOVE EXISTING LIFT STATION POLE-MOUNTED EQUIPMENT.
4. EXISTING DRYWELL TO REMAIN FOR USE WITH NEW EQUIPMENT. REMOVE EXISTING POWER & SIGNAL CONNECTIONS, CONDUITS & CONDUCTORS.
5. EXISTING WETWELL TO REMAIN FOR USE WITH NEW EQUIPMENT. EXISTING BUBBLER CONDUIT TO REMAIN, ABANDONED IN PLACE.
6. EXISTING 240/120V DELTA-HIGH LEG UTILITY TRANSFORMER TO REMAIN FOR USE WITH NEW EQUIPMENT. COORDINATE TRANSFER OF UTILITY SERVICE TO NEW METERING WITH NV ENERGY. INSTALL A NEW 2" EMPTY CONDUIT AS REQUIRED BY NV-ENERGY WORK ORDER DRAWINGS.
7. CONNECT NEW POLE MOUNTED LUMINAIRE WITH (3)-#12 IN 1" C. FROM PANEL 'LA'-4,6. INCLUDE AN EMPTY SPARE 2" CONDUIT BETWEEN NEW RTU CABINET AND NEW TYPE-7 POLE.
8. MOUNT SCADA ANTENNA ON TOP OF TYPE-7 LUMINAIRE. PROVIDE CONDUIT AND CABLE UNDERGROUND FROM RTU/SCADA CABINET TO TOP OF POLE AS WELL AS REQUIRED ACCESSORIES INCLUDING WEATHER-HEAD AND MOUNTING HARDWARE. ALL HARDWARE TO BE 316 STAINLESS STEEL.
9. INSTALL THE SUBMERSIBLE TRANSDUCER, ULTRA-SONIC TRANSDUCER, & FLOAT-SWITCH CABLES IN A 2" C. WITH #12 GND BETWEEN ENCLOSURE AND THE WETWELL.
10. INSTALL (6)-#12 A 1.5" C. BETWEEN PANEL-'LA' AND THE DRYWELL. INSTALL (3)-#6 & #10 GND IN 2" C. BETWEEN THE DUPLEX PUMP CONTROL PANEL AND THE DRYWELL.
11. INSTALL A 2" E.C. & 1" E.C. BETWEEN THE ATS AND FUTURE GENERATOR STUB-UP LOCATION. CAP CONDUIT STUBS.
12. REMOVE EXISTING DRYWELL LIFT-STATION CONTROL PANEL AND CONNECTIONS, CONDUITS & CONDUCTORS.
13. RECONNECT DRYWELL LIGHTS, BLOWER, CONVENIENCE RECEPTACLE IN CONJUNCTION WITH EXISTING TOGGLE AND HATCH SWITCH.
14. INSTALL A CONVENIENCE RECEPTACLE AND CONNECT COMPLETE.
15. PROVIDE AND INSTALL CANNON PLUG / DISCONNECT SWITCHES FOR DRYWELL PUMPS-1 & -2. LEVITON #430MI9W & #430P9W. TYPICAL OF 2 SETS. RECONNECT EXISTING DRYWELL PUMPS.
16. RECONNECT EXISTING SUMP PUMP (DRYWELL) IN CONJUNCTION WITH CURRENT SENSOR (EQUIPMENT CABINET).
17. BOND NEW FENCE WITH #8 BARE COPPER BURIED AT -24" OF FINISHED GRADE.
18. INSTALL AN 8" CONCRETE COLLAR AROUND PULLBOX PERIMETER. BOND METAL LID PER NEC 314.30(D). FILL BOTTOM 12" WITH 1/4" DRAIN ROCK.

Call before you Dig
Avoid cutting underground utility lines. It's costly.
Call 811 OR 1-800-227-2600

DESIGNED BY:	MJJ
DRAWN BY:	MJJ/MMA/SJM
CHECKED BY:	MJJ
DWG NO.:	E119AR
SCALE (HORIZ):	SHOWN
SCALE (VERT):	SHOWN
PLOT DATE:	1-27-15

JENSEN ENGINEERING INC.
Electrical Engineers
9655 Gateway Drive
Reno, Nevada 89521-2988
Ph. (775) 852-2288
Fax (775) 852-3388
email: jeneng@nvbell.net
web: www.jeneng.com

REGISTERED PROFESSIONAL ENGINEER
MICHAEL J. JENSEN
Exp. 6-30-15
ELECTRICAL
No. E21568
STATE OF NEVADA
1-27-15

REV.	DATE	DESCRIPTION	BY	APP'D

EMPIRE LIFT STATION
IMPROVEMENT PROJECT
PROJECT No. 051404

EXISTING & PROPOSED
ELECTRICAL SITE
PLANS

SHEET E2 OF 8

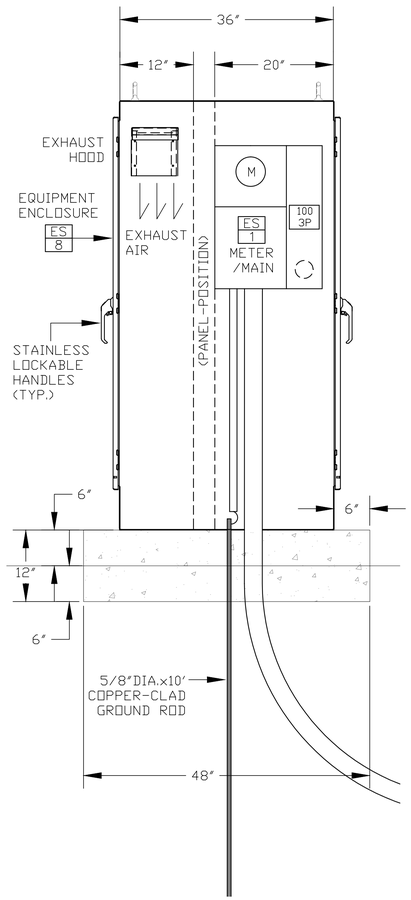

A E3 CONTROL CABINET (METER VIEW) SCALE: 1"=1'-0"

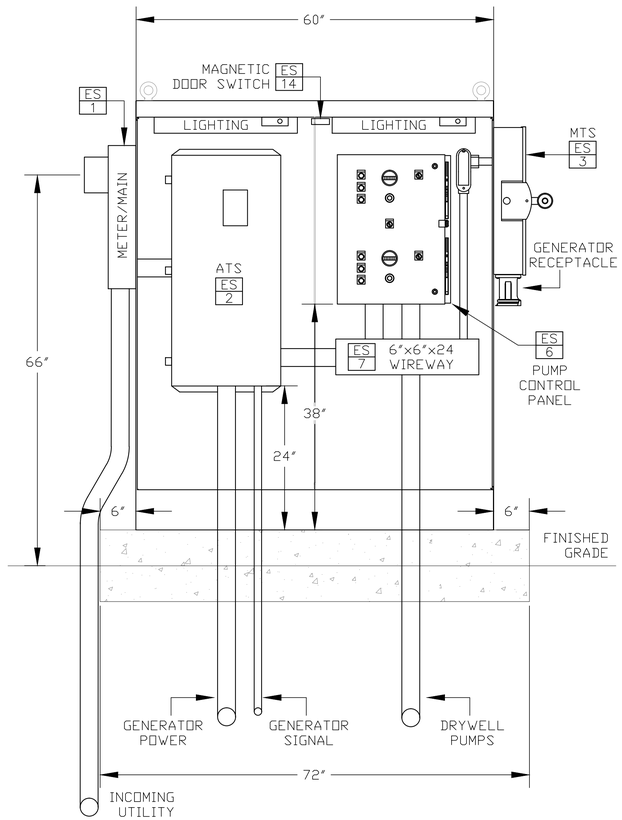

B E3 CONTROL CABINET (FRONT INTERIOR) SCALE: 1"=1'-0"

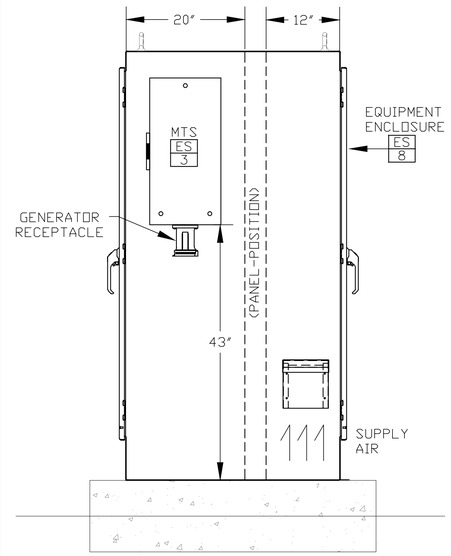

C E3 CONTROL CABINET (MTS VIEW) SCALE: 1"=1'-0"

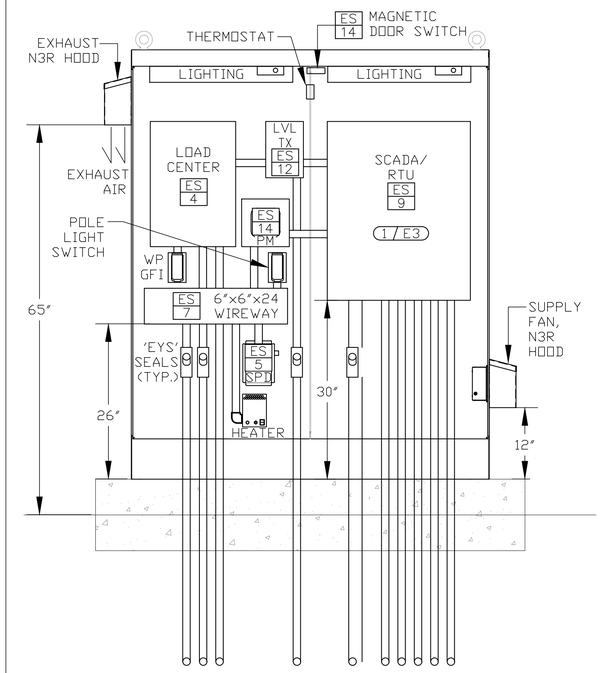

D E3 CONTROL CABINET (REAR INTERIOR) SCALE: 1"=1'-0"

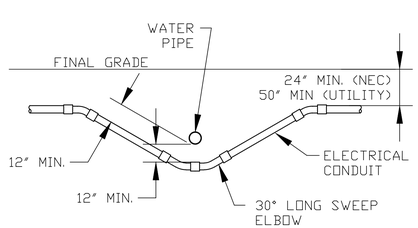

E E3 TYPICAL WATER CROSSING DETAIL
SCALE: 1/4"=1'-0"

NEMA-4 ENCLOSED REMOTE TERMINAL UNIT "RTU" TO MONITOR AND CONTROL LIFT-STATION FUNCTIONS AS FOLLOWS:

A. MONITORING
1. ATS-SOURCE 'UTILITY'
2. ATS-SOURCE 'GENERATOR'
3. DRYWELL PUMP-1 'RUNNING'
4. DRYWELL PUMP-2 'RUNNING'
5. ULTRASONIC TRANSDUCER 'LEVEL'
6. POWER MONITOR 'AMPS/ø'
7. POWER MONITOR 'VOLTS/ø'
8. POWER MONITOR 'kW'
9. POWER MONITOR 'Wh'
10. POWER MONITOR 'VAR'
11. POWER MONITOR 'VARh'
12. POWER MONITOR 'VA'
13. POWER MONITOR 'VAh'
14. POWER MONITOR 'PF'
15. POWER MONITOR 'FREQUENCY'
16. PRESSURE TRANSDUCER 'LEVEL'

B. ALARMS
1. ATS - 'FAULT'
2. PUMP-1 'FAULT'
3. PUMP-2 'FAULT'
4. DUPLEX 'POWER FAIL'
5. WETWELL 'HIGH-WATER'
6. SUMP PUMP 'RUN'
7. MAGNETIC SWITCHES 'INTRUSION'

C. COMMUNICATION
1. WIRELESS RADIO LINK

E. FUTURE ADDITIONS
1. VIDEO SURVEILLANCE
2. GENERATOR 'RUN'
3. GENERATOR 'FAIL'
4. GENERATOR 'FUEL LEVEL'
5. GENERATOR 'LEAK'

CONTRACTOR TO PROVIDE SHOWN CONDUCTORS IN CONDUIT TO RTU PANEL.
CONTRACTOR SHALL PROVIDE RTU ENCLOSURE BACKPANEL TO CARSON CITY.
RTU STARTUP & INTEGRATION SHALL BE BY CARSON CITY PERSONNEL.

F E3 RTU/SCADA NOTES
SCALE: NOT TO SCALE

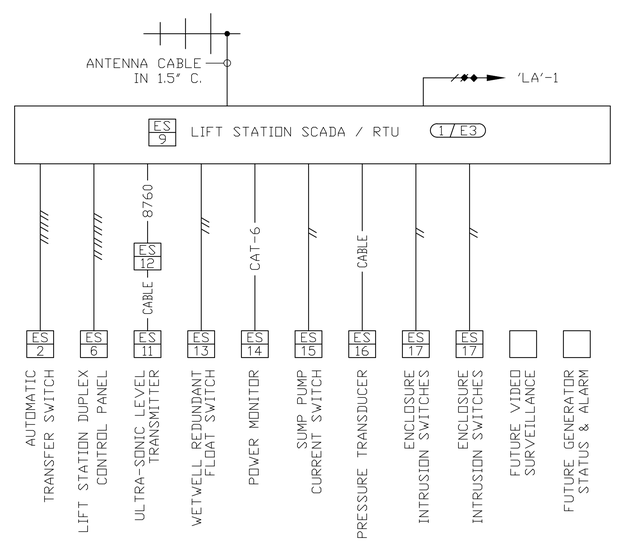

G E3 RTU/SCADA DIAGRAM
SCALE: NOT TO SCALE

SHEET NOTES: /E3

1. EXISTING STATION RTU/PLC EQUIPMENT TO BE REMOVED AND RE-INSTALLED IN A NEW SCADA EQUIPMENT ENCLOSURE. SALVAGE ALL RADIO/SCADA EQUIPMENT TO CARSON CITY FOR RE-USE IN NEW EQUIPMENT ENCLOSURE. PROGRAMMING AND SOFTWARE UPGRADES TO BE BY CARSON CITY PERSONNEL. CONTRACTOR TO TERMINATE NEW POWER AND SIGNAL WIRING AFTER NEW SCADA/RTU BACKPANEL IS IN PLACE.

Call before you Dig
Avoid cutting underground utility lines. It's costly.
Call 811 OR 1-800-227-2600

DESIGNED BY:	MJJ
DRAWN BY:	MJJ/MMA/SJM
CHECKED BY:	MJJ
DWG NO.:	E119AR
SCALE (HORIZ):	SHOWN
SCALE (VERT):	SHOWN
PLOT DATE:	1-27-15

JENSEN ENGINEERING INC.
Electrical Engineers
9655 Gateway Drive
Reno, Nevada 89521-2988
Ph. (775) 852-2288
Fax (775) 852-3388
email: jeneng@nvbell.net
web: www.jeneng.com

REGISTERED PROFESSIONAL ENGINEER STATE OF NEVADA
MICHAEL J. JENSEN
Exp. 6-30-15
ELECTRICAL
No. E21568
1-27-15

REV.	DATE	DESCRIPTION	BY	APP'D

EMPIRE LIFT STATION IMPROVEMENT PROJECT
PROJECT No. 051404
CONTROL CABINET ELEVATIONS, SITE DETAIL & RTU/SCADA REQUIREMENTS

SHEET E3 OF 8

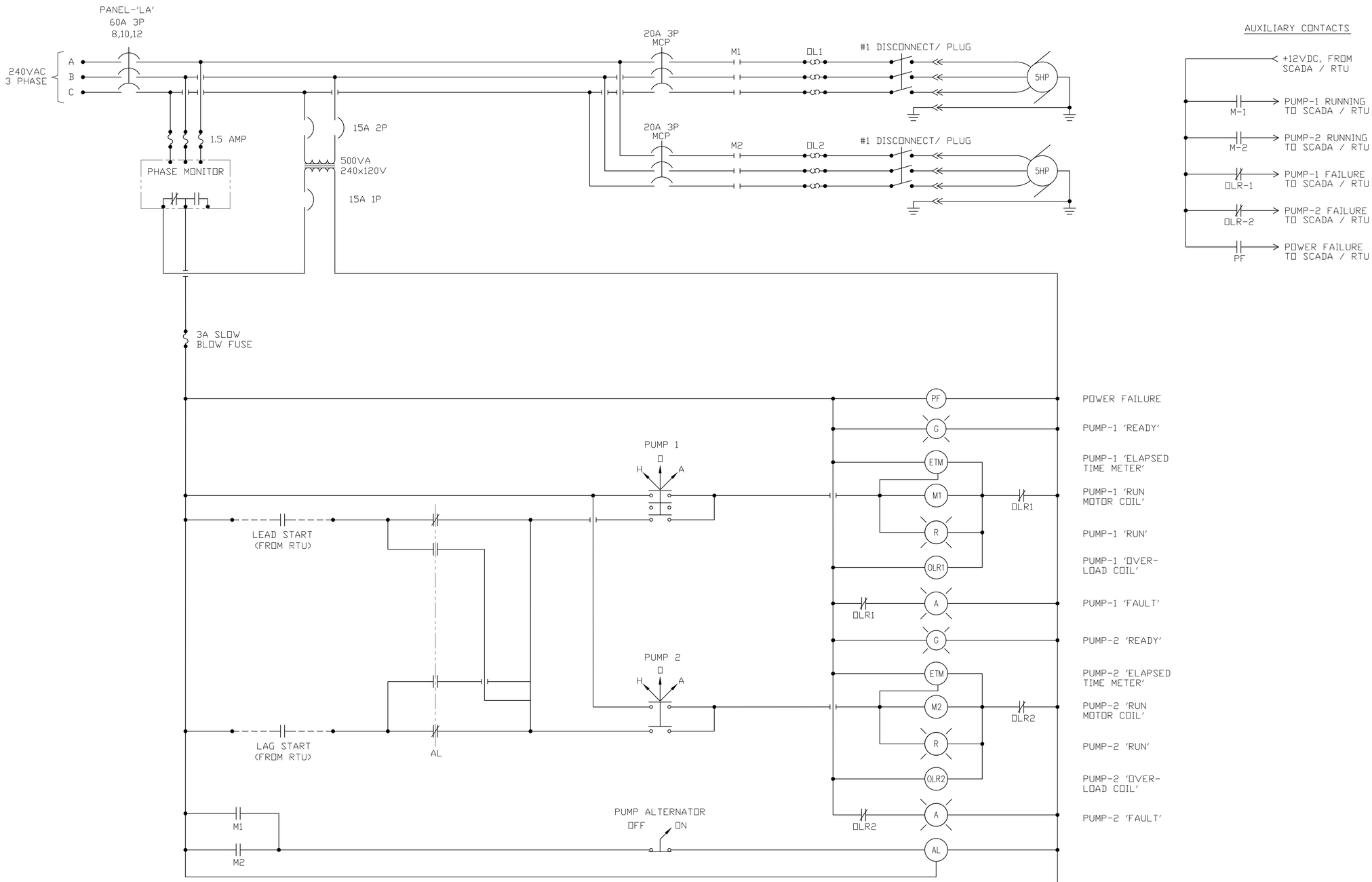

A
E4

PUMP CONTROL PANEL DIAGRAM

SCALE: NOT TO SCALE

Call before you Dig
Avoid cutting underground utility lines. It's costly.
Call 811
OR
1-800-227-2600

DESIGNED BY: MJJ
DRAWN BY: MJJ/MMA/SJM
CHECKED BY: MJJ
DWG NO.: E119AR
SCALE (HORIZ): SHOWN
SCALE (VERT): SHOWN
PLOT DATE: 1-27-15

JENSEN ENGINEERING INC.
Electrical Engineers
9655 Gateway Drive
Reno, Nevada 89521-2988
Ph. (775) 852-2288
Fax (775) 852-3388
email: jeneng@nvbell.net
web: www.jeneng.com

REGISTERED PROFESSIONAL ENGINEER
STATE OF NEVADA
MICHAEL J. JENSEN
Exp. 6-30-15
ELECTRICAL
No. E21568
1-27-15

REV.	DATE	DESCRIPTION	BY	APP'D

EMPIRE LIFT STATION
IMPROVEMENT PROJECT
PROJECT No. 051404

PUMP PANEL
CONTROL DIAGRAM

SHEET
E4
OF
8

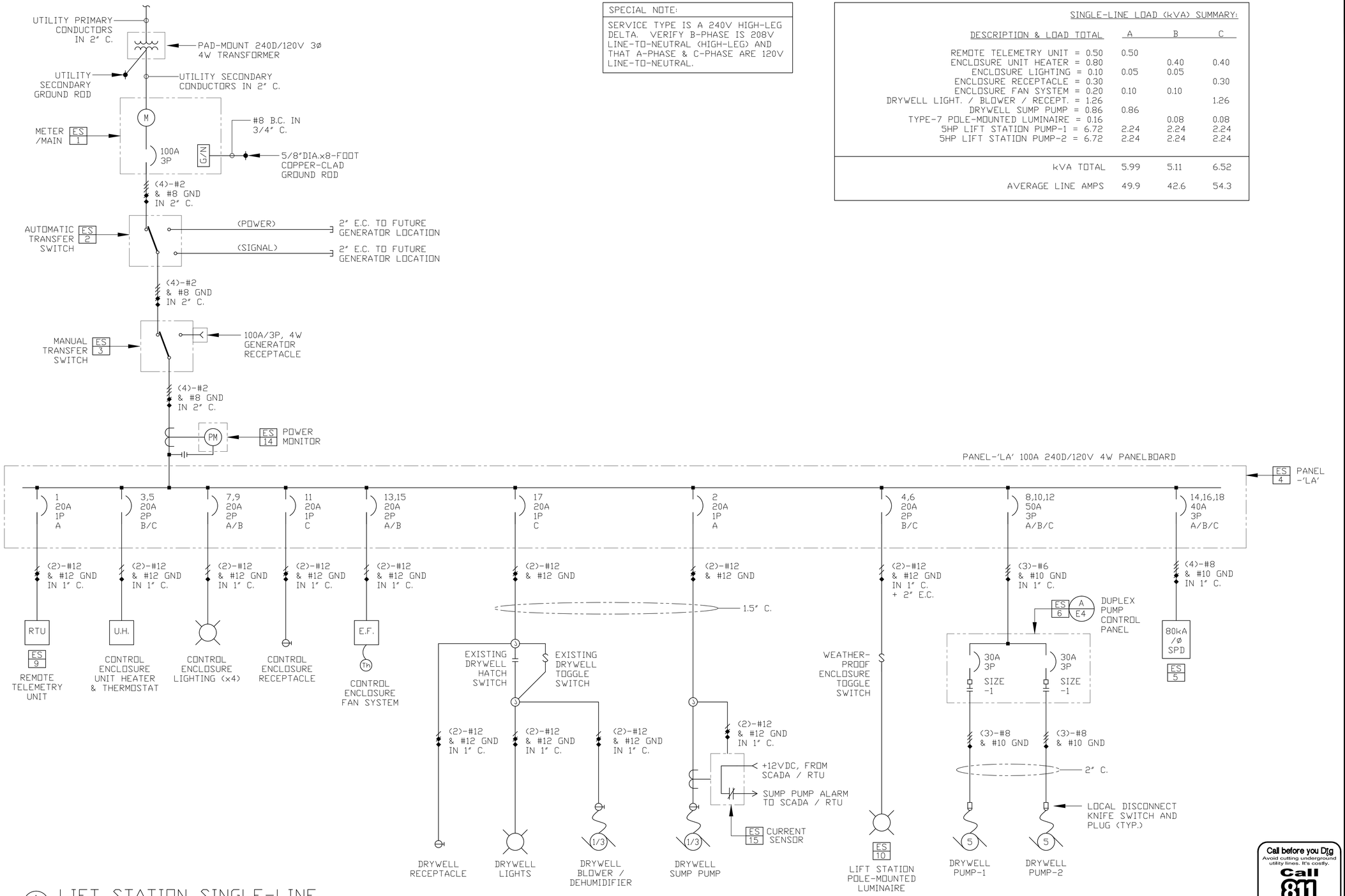

A E5 LIFT STATION SINGLE-LINE DIAGRAM

SCALE: N.T.S.

SPECIAL NOTE:

SERVICE TYPE IS A 240V HIGH-LEG DELTA. VERIFY B-PHASE IS 208V LINE-TO-NEUTRAL (HIGH-LEG) AND THAT A-PHASE & C-PHASE ARE 120V LINE-TO-NEUTRAL.

SINGLE-LINE LOAD (kVA) SUMMARY:

DESCRIPTION & LOAD TOTAL	A	B	C
REMOTE TELEMETRY UNIT = 0.50	0.50		
ENCLOSURE UNIT HEATER = 0.80		0.40	0.40
ENCLOSURE LIGHTING = 0.10	0.05	0.05	
ENCLOSURE RECEPTACLE = 0.30			0.30
ENCLOSURE FAN SYSTEM = 0.20	0.10	0.10	
DRYWELL LIGHT. / BLOWER / RECEPT. = 1.26			1.26
DRYWELL SUMP PUMP = 0.86	0.86		
TYPE-7 POLE-MOUNTED LUMINAIRE = 0.16		0.08	0.08
5HP LIFT STATION PUMP-1 = 6.72	2.24	2.24	2.24
5HP LIFT STATION PUMP-2 = 6.72	2.24	2.24	2.24
kVA TOTAL	5.99	5.11	6.52
AVERAGE LINE AMPS	49.9	42.6	54.3

DESIGNED BY: MJJ
DRAWN BY: MJJ/MMA/SJM
CHECKED BY: MJJ
DWG NO.: E119AR
SCALE (HORIZ): SHOWN
SCALE (VERT): SHOWN
PLOT DATE: 1-27-15

JENSEN ENGINEERING INC.
Electrical Engineers
9655 Gateway Drive
Reno, Nevada 89521-2988
Ph. (775) 852-2288
Fax (775) 852-3388
email: jeneng@nvbell.net
web: www.jeneng.com

PROFESSIONAL ENGINEER — STATE OF NEVADA
MICHAEL J. JENSEN
Exp. 6-30-15
ELECTRICAL
No. E21568
1-27-15

REV.	DATE	DESCRIPTION	BY	APP'D

EMPIRE LIFT STATION IMPROVEMENT PROJECT
PROJECT No. 051404

SINGLE-LINE DIAGRAM, & LOAD SUMMARY

Call before you Dig
Avoid cutting underground utility lines. It's costly.
Call 811 OR 1-800-227-2600

SHEET E5 OF 8