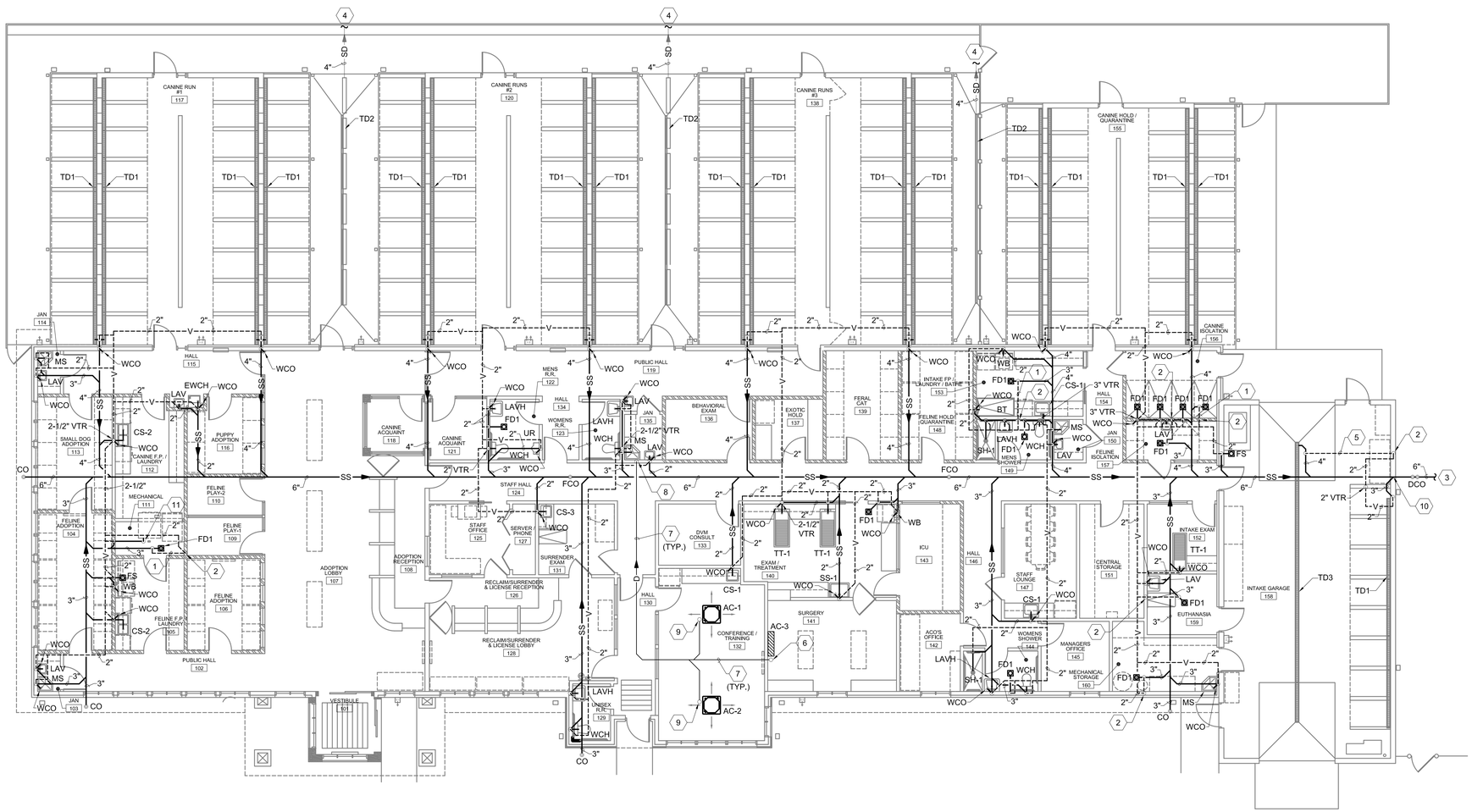

A1 PLUMBING WASTE AND VENT PLAN
1/8"=1'-0"

PROJECT NORTH

GENERAL NOTES

A. ALL PIPING SHALL BE CONCEALED WHERE POSSIBLE. ALL EXPOSED PIPING WHERE CONCEALMENT IS NOT POSSIBLE SHALL BE INSTALLED AND PAINTED AS DIRECTED BY THE ARCHITECT.

B. ALL BRANCHES SHALL BE VALVED AND ALL VALVES SHALL HAVE UNIONS ADJACENT. ACCESS PANELS AND DOORS SHALL BE FURNISHED TO GENERAL CONTRACTOR FOR INSTALLATION AND ACCESS TO VALVES WHERE REQUIRED. LOCATE ADDITIONAL VALVES AS SHOWN ON DRAWINGS. SEE SPECIFICATIONS.

C. ALL PIPING SHALL PITCH TO DRAIN AND CONTRACTOR SHALL PROVIDE VALVING FOR SYSTEM DRAINAGE. CONTRACTOR SHALL DELIVER A MARKED-UP SET OF PLANS TO THE ARCHITECT FOR INCLUSION IN AS-BUILT DRAWINGS.

D. CARE SHALL BE TAKEN TO AVOID MECHANICAL DUCTWORK, ELECTRICAL EQUIPMENT AND AIR HANDLING EQUIPMENT ABOVE CEILING. THIS CONTRACTOR SHALL BE RESPONSIBLE FOR COORDINATING ROUTING OF PIPING WITH CEILING CONTRACTOR AND SHEET METAL CONTRACTOR. RELOCATION OF PIPING AS A RESULT OF POOR COORDINATION BY THIS CONTRACTOR SHALL BE AT HIS OWN EXPENSE.

E. NO WATER PIPING SHALL BE LOCATED IN OUTSIDE WALLS UNLESS SHOWN TO BE AND THEN PIPING TO BE INSULATED AND LOCATED AS CLOSE AS POSSIBLE TO INSIDE OF WALL CAVITY WITH ADDITIONAL INSULATION BETWEEN PIPING AND EXTERIOR OF WALL.

F. ALL TRENCHING AND BACKFILL FOR PIPING SHALL BE THE RESPONSIBILITY OF THIS CONTRACTOR.

G. ALL PIPE PENETRATIONS THRU FIRE-RATED ASSEMBLIES SHALL BE SLEEVED AND SEALED WITH CODE-APPROVED FIRE BARRIER MATERIALS.

H. SECURE ALL PIPING TO WALLS FOR A RIGID INSTALLATION WITH UNISTRUT BRACKETS AND GASKETED PIPE CLAMPS.

I. PIPING SHOWN SCHEMATICALLY FOR CLARITY. ACTUAL PIPE ROUTING TO BE COORDINATED IN THE FIELD WITH ALL TRADES.

J. ALL LOCATIONS WHERE PIPES ARE INSTALLED THRU A STEM WALL OR FOOTING SHALL HAVE A SCHEDULE 40 STEEL PIPE SLEEVE ONE PIPE SIZE LARGER IN DIAMETER EXTENDING 12" BEYOND BOTH SIDES OF FOOTER/WALL. (NO EXTENSION REQUIRED FOR WATER ON INTERIOR SIDE WHERE PIPE RISES NEXT TO WALL).

K. THE CONTRACTOR SHALL BE RESPONSIBLE FOR COORDINATING THE INSTALLATION OF THE PIPING TO ALLOW ADEQUATE CLEARANCE OF LIGHTING FIXTURES AND DUCTWORK AND TO AVOID STRUCTURAL MEMBERS AND OTHER CEILING EQUIPMENT. THE CONTRACTOR SHALL COORDINATE WITH ALL OTHER TRADES TO AVOID CONFLICTS IN THE CEILING SPACE.

L. PLUMBING FIXTURES SHALL BE INSTALLED AT HEIGHTS SHOWN ON ARCHITECTURAL PLANS. THE CONTRACTOR SHALL REFER TO THE ARCH DRAWINGS FOR ROUGH-IN LOCATIONS OF PLUMBING FIXTURES. THE CONTRACTOR SHALL BRING ANY DISCREPANCIES TO THE ATTENTION OF THE A/E.

KEYED NOTES

1. 2" VENT ROUTED BELOW FLOOR FROM FLOOR DRAIN.
2. 2" VENT FROM BELOW FLOOR UP IN WALL TO CEILING SPACE AND ROUTE AS SHOWN.
3. REFER TO CIVIL FOR CONTINUATION.
4. 4" STORM DRAINAGE ROUTED TO STORM SEWER. COORDINATE WITH CIVIL.
5. 2" VENT ROUTED BELOW FLOOR FROM TRENCH DRAIN.
6. ROUTE 3/4" CONDENSATE DRAIN LINE UP TO CEILING SPACE FROM WALL MOUNTED AC UNIT'S CONDENSATE PUMP AND ROUTE AS SHOWN.
7. ALL HORIZONTAL CONDENSATE DRAIN LINES SHALL BE ROUTED AT 1/8" PER FOOT SLOPE TO DISCHARGE POINT.
8. 1" CONDENSATE DRAIN DOWN IN WALL AND TERMINATE AT MOP SINK WITH AIR GAP, PER CODE.
9. 3/4" CONDENSATE DRAIN FROM EQUIPMENT ON ROOF. ROUTE IN CEILING SPACE AS SHOWN.
10. INVERT OF 6" SANITARY SEWER IS 70" BELOW FINISHED FLOOR AT THIS LOCATION. SEWER LINE IS SLOPED AT 1/4" PER FOOT.
11. COMMERCIAL WASHER DRAIN SHALL BE PIPED WITH P-TRAP AND AIR GAP FITTING, AS REQUIRED AND ROUTE AS SHOWN.

THE RESPONSE GROUP, INC.
An Electrical/Mechanical Engineering Corporation
11930 Menaul N.E. Suite 214
Albuquerque, New Mexico 87112
Phone:(505) 323-7629 Fax:(505) 323-7594
Email: theresponsegroup@trg-inc.net

901 Lamberton Pl. NE
Albuquerque, NM 87107
Phone: (505) 858-0180
Fax: (505) 858-0111
Email: info@bdaarc.com

The documents transmitted herein are the sole Intellectual Property of BDA Architecture, P.C. Any use, reuse, or reproduction in any form without the express written consent of, and compensation to, BDA Architecture is a violation of federal law.

BDA

STATE OF NEVADA PROFESSIONAL ENGINEER
DAVID C. CRAHAN
Expires 6/30/15
No. 018149
15016

CARSON CITY ANIMAL SERVICES

549 Airport Road
Carson City, Nevada 89701
City of Carson City

Copyright, 2015, BDA ARCHITECTURE PC.

PLUMBING WASTE AND VENT PLAN

REV.#	DATE	COMMENTS
REVISION: -		
REVISION: -		
REVISION: -		
REVISION: -		

REVIEWS	
INITIALS	BDA DSGN. REV.
	BDA TECH REV.

CCAS

PROJECT NO.: 1107
DRAWN: KND/CMB/TD
DATE: 2/27/2015

P101

OF

Save Date: February 27, 2015 - 1:56 PM - Tomd
Plot Date: February 27, 2015 - 2:06 PM
Drawing Name: Z:\Projects\2015\15011 Carson City, NV Animal Services\15016 - P101 - Plumbing Plan Waste & Vent.dwg

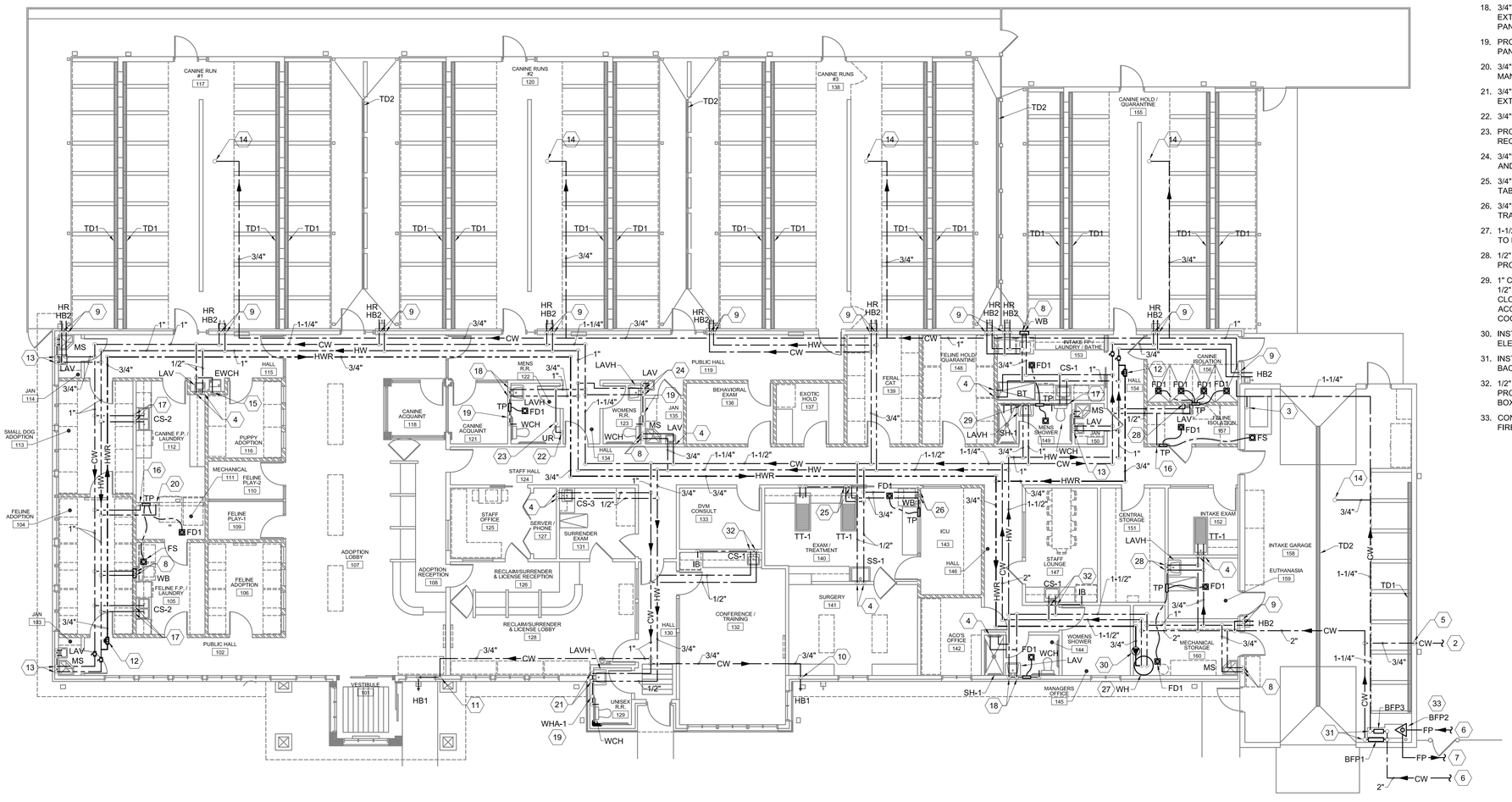

A1 PLUMBING WATER PLAN

1/8"=1'-0"

PROJECT NORTH

GENERAL NOTES

A. REFER TO PLUMBING SHEET P101 FOR GENERAL NOTES.

KEYED NOTES

1. GAS LINE UP TO ROOF TOP UNIT. REFER TO SHEET P105 FOR CONTINUATION.
2. 3/4" CW TO YARD HYDRANT. COORDINATE WITH CIVIL AND ARCHITECT FOR LOCATION OF YARD HYDRANT.
3. MAKE-UP WATER FOR RADIANT HEAT BOILER. COORDINATE WITH MECHANICAL.
4. 1/2" CW AND 1/2" HW DOWN IN WALL TO PLUMBING FIXTURE.
5. 3/4" CW DOWN IN WALL TO BELOW GRADE AND ROUTE AS SHOWN.
6. REFER TO CIVIL FOR CONTINUATION.
7. TO FIRE DEPARTMENT CONNECTION. REFER TO CIVIL FOR CONTINUATION.
8. 3/4" CW AND 3/4" HW DOWN IN WALL TO PLUMBING FIXTURE.
9. 1/2" CW AND 1/2" HW DOWN IN WALL TO HOSE BIBB.
10. 3/4" CW DOWN IN WALL TO HOSE BIBB.
11. 3/4" CW DOWN IN WALL. ROUTE IN WALL AND BELOW WINDOW TO HOSE BIBB.
12. PROVIDE AND INSTALL BALANCING VALVE AT THIS LOCATION. PROVIDE ACCESS PANEL AS REQUIRED. COORDINATE WITH ARCHITECT.
13. 3/4" CW AND 3/4" HW DOWN IN WALL. ROUTE 3/4" CW AND 3/4" HW TO MOP SINK AND EXTEND 1/2" CW AND 1/2" HW TO LAVATORY.
14. 3/4" MAKE-UP WATER UP TO EVAP COOLERS ON ROOF. REFER TO SHEET P105 FOR CONTINUATION.
15. 1/2" CW DOWN IN WALL TO ELECTRIC WATER COOLER.
16. 1/2" CW DOWN IN WALL TO TRAP PRIMER. EXTEND 1/2" CW BELOW FLOOR TO FLOOR DRAIN AND/OR FLOOR SINK.
17. 1/2" CW AND 1/2" HW DOWN IN WALL TO COUNTER SINK. PROVIDE 1/2" HW CONNECTION FOR DISHWASHER.
18. 3/4" CW AND 1/2" HW DOWN IN WALL. ROUTE 1/2" CW AND 1/2" HW TO LAVATORY AND EXTEND 1/2" CW TO TRAP PRIMER AND 3/4" CW TO WATER CLOSET. PROVIDE ACCESS PANEL FOR TRAP PRIMER AS REQUIRED. COORDINATE WITH ARCHITECT.
19. PROVIDE WATER HAMMER ARRESTOR PRIOR TO WATER CLOSET. PROVIDE ACCESS PANEL AS RQUIRED. COORDINATE WITH ARCHITECT.
20. 3/4" HW DOWN IN WALL AND CONNECT TO CLOTHES WASHER AS PER MANUFACTURER'S REQUIREMENTS.
21. 3/4" CW AND 1/2" HW DOWN IN WALL. ROUTE 1/2" CW AND 1/2" HW TO LAVATORY AND EXTEND 3/4" CW TO WATER CLOSET.
22. 3/4" CW DOWN IN WALL TO URINAL.
23. PROVIDE WATER HAMMER ARRESTOR PRIOR TO URINAL. PROVIDE ACCESS PANEL AS REQUIRED. COORDINATE WITH ARCHITECT.
24. 3/4" CW AND 3/4" HW DOWN IN WALL. ROUTE 1/2" CW AND 1/2" HW TO EACH LAVATORY AND EXTEND 3/4" CW TO EACH WATER CLOSET.
25. 3/4" CW AND 3/4" HW DOWN IN WALL. ROUTE 1/2" CW AND 1/2" HW TO EACH TREATMENT TABLE.
26. 3/4" CW AND 3/4" HW DOWN IN WALL TO CLOTHES WASHER AND EXTEND 1/2" CW TO TRAP PRIMER.
27. 1-1/2" HW FROM WATER HEATER. 1-1/2" CW AND 3/4" HWR TO WATER HEATER. REFER TO DETAIL.
28. 1/2" CW AND 1/2" HW DOWN IN WALL TO LAVATORY. EXTEND 1/2" CW TO TRAP PRIMER. PROVIDE ACCESS PANEL AS REQUIRED. COORDINATE WITH ARCHITECT.
29. 1" CW AND 3/4" HW DOWN IN WALL. ROUTE 1/2" CW AND 1/2" HW TO LAVATORY. EXTEND 1/2" CW AND 1/2" HW TO SHOWER. 1/2" CW TO TRAP PRIMER, AND 3/4" CW TO WATER CLOSET. PROVIDE WATER HAMMER ARRESTOR PRIOR TO WATER CLOSET. PROVIDE ACCESS PANEL FOR TRAP PRIMER AND WATER HAMMER ARRESTOR AS REQUIRED. COORDINATE WITH ARCHITECT.
30. INSTALL HOT WATER CIRCULATOR (CP-1) AT THIS LOCATION. COORDINATE WITH ELECTRICAL CONTRACTOR.
31. INSTALL BFP3 ON WALL AND ABOVE BFP1. CONTRACTOR SHALL INSTALL BOTH BACKFLOW PREVENTORS AT ACCESSIBLE HEIGHTS.
32. 1/2" CW AND 1/2" HW DOWN IN WALL. ROUTE 1/2" CW AND 1/2" HW TO COUNTER SINK, PROVIDE 1/2" HW CONNECTION FOR DISHWASHER AND EXTEND 1/2" CW TO ICE MAKER BOX (IB).
33. CONTRACTOR IS RESPONSIBLE FOR THE INSTALLATION, DESIGN, AND APPROVAL OF FIRE SUPPRESSION SYSTEM.

901 Lamberton Pl. NE
Albuquerque, NM 87107
Phone: (505) 858-0180
Fax: (505) 858-0111
Email: info@bdaarc.com

The documents transmitted herein are the sole Intellectual Property of BDA Architecture, P.C. Any use, reuse, or reproduction in any form without the express written consent of, and compensation to BDA Architecture is a violation of federal law.

BDA

PROFESSIONAL ENGINEER - STATE OF NEVADA
DAVID C. GRAHAM
2/27/2015
MECHANICAL
No. 18128
EXP. 6/30/16

15016

CARSON CITY ANIMAL SERVICES

549 Airport Road
Carson City, Nevada 89701
City of Carson City

Copyright, 2015, BDA ARCHITECTURE PC.

PLUMBING WATER PLAN

REV.#	DATE:	COMMENTS
REVISION: -		
REVISION: -		
REVISION: -		
REVISION: -		

REVIEWS	
INITIALS	BDA DSGN. REV.
	BDA TECH REV.

CCAS

PROJECT NO.: 1107
DRAWN: CMB/TD
DATE: 2/27/2015

P102

OF

THE RESPONSE GROUP, INC.
An Electrical/Mechanical Engineering Corporation
11930 Menaul N.E. Suite 214
Albuquerque, New Mexico 87112
Phone:(505) 323-7629 Fax:(505) 323-7594
E-mail: theresponsegroup@trg-inc.net

Save Date: February 27, 2015 - 1:56 PM - Torrid
Plot Date: February 27, 2015 - 2:09 PM
Drawing Name: Z:\Projects\2015\15011\15011 Carson City, NV Animal Services\15016 - P102 - Plumbing Plan Water.dwg

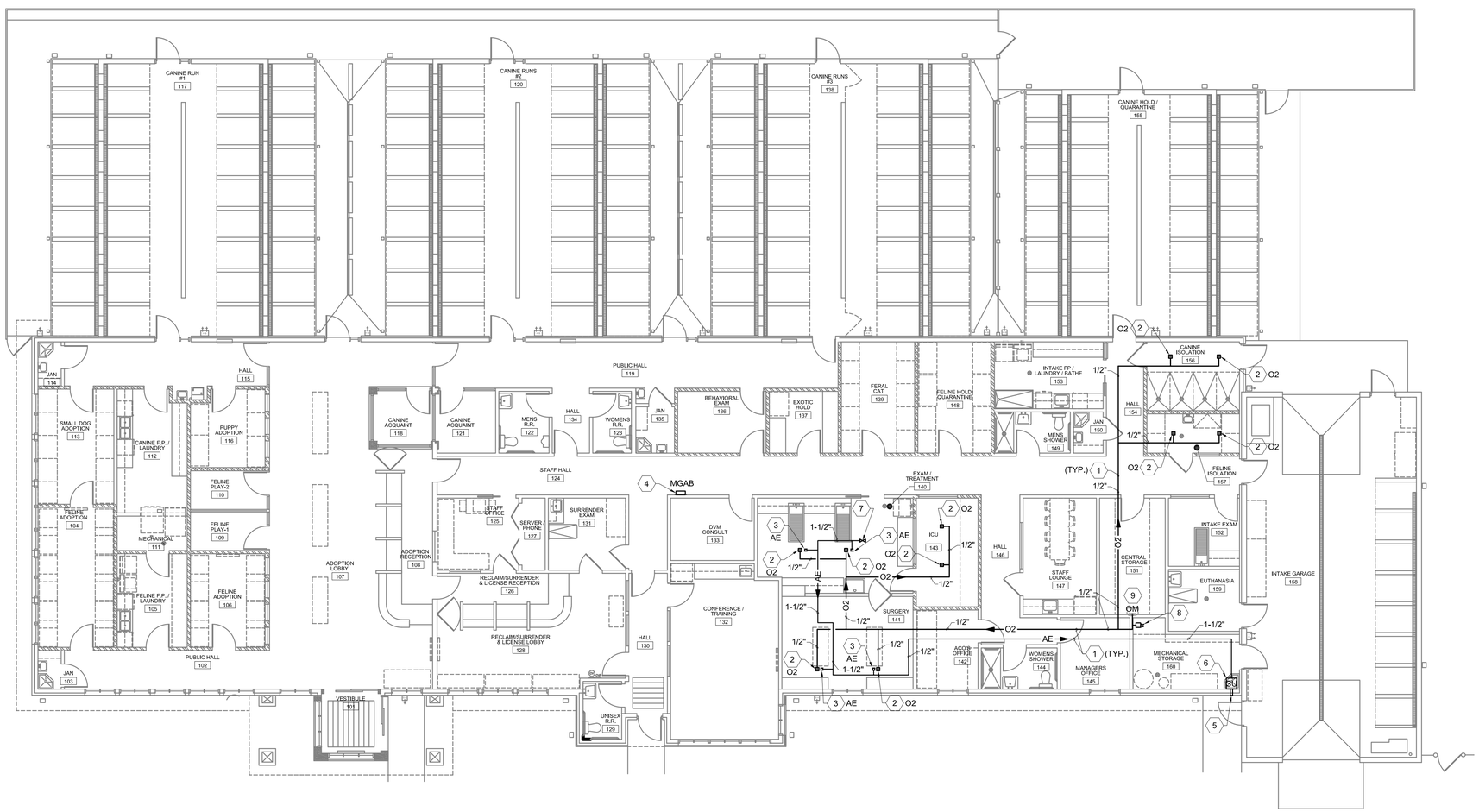

A1 PLUMBING MEDICAL GAS PLAN

1/8"=1'-0"

PROJECT NORTH

MEDICAL GAS GENERAL NOTES

A. MEDICAL GASES PIPING: ASTM 888, TYPE "K" OR "L" COPPER WITH WROUGHT COPPER WITH FITTINGS PER ANSI B16.22 AND SILVER BRAZED JOINTS. SUPPORT PIPE WITH HANGERS AT 5' ON CENTER FOR 1/2" AND 6' ON CENTER OF 3/4" THRU 2". ANESTHESIA EXHAUST SYSTEM MAY BE MINIMUM SCHEDULE 40 PVC MEETING ALL REQUIREMENTS OF INSTALLATION AS OUTLINED IN NFPA 99C LEVEL 3 AND APPROVED BY LOCAL AUTHORITY.

B. VALVES: BRONZE BODY, GATE OR BALL VALVE FOR APPROPRIATE GASES, CLASS 150 AND 125.

C. VALVE CABINETS: STEEL CONSTRUCTION, LABELED FOR GAS USE WITH FLANGIBLE COVERS. PRESSURE GAUGES TO BE PROVIDED WITH VALVES.

D. STATION OUTLETS: RECESSED AND SHALL MEET NFPA 99C LEVEL 3 STANDARDS.

E. SEE SPECIFICATIONS SECTION 15485 FOR COMPLETE INFORMATION.

F. THE NEW MEDICAL GAS SYSTEMS (MEDICAL OXYGEN, MEDICAL VACUUM AND ANESTHESIA EVAC) SHALL BE CERTIFIED AS A COMPLETE OPERATING SYSTEM PER NFPA 99C LEVEL 3 REQUIREMENTS.

KEYED NOTES

1. PIPING ROUTED ABOVE CEILING, TYPICAL.
2. 1/2" OXYGEN TO OXYGEN(O2) CEILING OUTLET. INSTALL PER NFPA 99C LEVEL 3 AND MANUFACTURER'S REQUIREMENTS. REFER TO PLUMBING EQUIPMENT SCHEDULE FOR MORE INFORMATION.
3. 1-1/2" ANESTHESIA EVAC TO ANESTHESIA EVAC(AE) CEILING OUTLET. INSTALL PER NFPA 99C LEVEL 3 AND MANUFACTURER'S REQUIREMENTS. REFER TO PLUMBING EQUIPMENT SCHEDULE FOR MORE INFORMATION.
4. MEDICAL GAS ALARM BUZZER (MGAB). COORDINATE INSTALLATION WITH OTHER DISCIPLINES AND ARCHITECTURAL PLANS. INSTALL PER NFPA 99C LEVEL 3 AND MANUFACTURER'S REQUIREMENTS. REFER TO PLUMBING EQUIPMENT SCHEDULE FOR MORE INFORMATION.
5. EXTEND 4" VENT FROM SCAVENGER UNIT (ANESTHESIA EVAC UNIT) HIGH THROUGH WALL, VENT THROUGH VENTILATED SOFFIT.
6. INSTALL SCAVENGER UNIT (SU) ON EXTERIOR WALL AT THIS LOCATION. COORDINATE WITH ARCHITECT FOR EXACT LOCATION AND MOUNTING HEIGHTS.
7. CONTRACTOR SHALL INSTALL CARRIER INLET VALVE FOR ANESTHIA EVAC (AE). CARRIER INLET VALVE SHALL BE INSTALLED IN AN ACCESSIBLE LOCATION. COORDINATE WITH OTHER TRADES.
8. PRESSURE SWITCH FOR OXYGEN (O2) M-PRSW-GA-OXY. WIRE FROM PRESSURE SWITCH TO MEDICAL GAS ALARM BUZZER (MGAB) PER NFPA 99. COORDINATE WITH ELECTRICAL CONTRACTOR.
9. INSTALL OXYGEN MANIFOLD (OM) AT THIS LOCATION. 1/2" OXYGEN UP FROM OXYGEN MANIFOLD TO CEILING SPACE AND ROUTE AS SHOWN. REFER TO PLUMBING EQUIPMENT SCHEDULE FOR MORE INFORMATION. COORDINATE WITH ALL DISCIPLINES.

NOTE: ANESTHESIA EVAC (AE) PIPING SHOWN ON DRAWINGS FOR CLARITY. ACTUAL AE PIPE ROUTING SHALL BE ROUTED OVER AE OUTLETS AS MUCH AS POSSIBLE TO MINIMIZE AMOUNT OF FITTINGS AND LENGTH OF BRANCH PIPE. AE PIPE ROUTING SHALL BE APPROVED AND COORDINATED WITH CMP PRIOR TO START OF WORK.

NOTE: FACILITY SHALL COMPLY WITH NFPA 99C LEVEL 3 AND/OR AUTHORITY HAVING JURISDICTION REQUIREMENTS.

NOTE:
PROVIDE SEISMIC RESTRAINTS/SUPPORTS FOR ALL EQUIPMENT, PIPING, ETC., AS REQUIRED BY LOCAL AND STATE CODES.

THE RESPONSE GROUP, INC.
An Electrical/Mechanical Engineering Corporation
11930 Menaul N.E. Suite 214
Albuquerque, New Mexico 87112
Phone:(505) 323-7629 Fax:(505) 323-7594
E-mail: theresponsegroup@trg-inc.net

901 Lamberton Pl. NE
Albuquerque, NM 87107
Phone: (505) 858-0180
Fax: (505) 858-0111
Email: info@bdaarc.com

The documents transmitted herein are the sole Intellectual Property of BDA Architecture, P.C. Any use, reuse, or reproduction in any form without the express written consent of, and compensation to, BDA Architecture is a violation of federal law.

BDA

STATE OF NEVADA PROFESSIONAL ENGINEER DAVID C. GRAHAM 2/27/2015 MECHANICAL No. 21218 EXP. 6/30/15

15016

CARSON CITY ANIMAL SERVICES

549 Airport Road
Carson City, Nevada 89701
City of Carson City

Copyright, 2015, BDA ARCHITECTURE PC.

PLUMBING MEDICAL GAS PLAN

REV.#	DATE	COMMENTS
REVISION: -		
REVISION: -		
REVISION: -		
REVISION: -		

REVIEWS	
INITIALS	BDA DSGN. REV.
	BDA TECH REV.

CCAS

PROJECT NO.: 1107
DRAWN: KND/TD
DATE: 2/27/2015

P103

OF

Save Date: February 27, 2015 - 1:56 PM - Tond
Plot Date: February 27, 2015 - 2:10 PM
Drawing Name: Z:\Projects\2015\15011 Carson City, NV Animal Services\15016 - P103 - Plumbing Plan Medical Gas.dwg

GENERAL NOTES

A. REFER TO PLUMBING SHEET P101 FOR GENERAL NOTES.

KEYED NOTES

1. GAS LINE UP TO ROOF TOP UNIT. REFER TO SHEET P105 FOR CONTINUATION.
2. GAS LINE DOWN IN WALL TO CLOTHES DRYER AND CONNECT WITH UNION, GAS VALVE, DIRT LEG AND FLEX CONNECTION.
3. ROUTE GAS LINE WITH PIPE SUPPORTS EVERY EIGHT FEET ON CENTER AND AT EVERY ELBOW AND TEE. CONTRACTOR SHALL OFFSET 12" FOR EVERY 100'-0" OF STRAIGHT RUN OF GAS PIPE, AS REQUIRED BY CODE.
4. REFER TO CIVIL FOR CONTINUATION.
5. INSTALL NEW GAS METER AT THIS LOCATION WITH A TOTAL LOAD OF 1680 MBH.
6. 1-1/2" GAS LINE DOWN TO WATER HEATER. CONNECT WITH UNION, GAS VALVE, DIRT LEG AND FLEX CONNECTION.
7. 1-1/4" GAS LINE DOWN TO BOILER. BOILER PROVIDE BY OTHERS. CONNECT WITH UNION, GAS VALVE, DIRT LEG AND FLEX CONNECTION. BOILER IS FOR RADIANT HEATING AND IS SIZED AT AN ESTIMATED 200 MBH. CONTRACTOR SHALL COORDINATE TOTAL GAS LOAD FOR BOILER WITH ENGINEER, UPON FINAL RADIANT HEATING DRAWINGS.
8. 3/4" GAS LINE TO GAS FIRED INFRARED HEATERS. CONNECT WITH UNION, GAS VALVE, DIRT LEG AND FLEX CONNECTION.
9. PROVIDE GAS REGULATOR TO REDUCE PRESSURE DOWN TO 0.5" W.C. AND WITH A TOTAL LOAD OF 455 MBH. ROUTE 1-1/2" GAS LINE UP ALONG WALL AND INTO CEILING SPACE AND ROUTE AS SHOWN.
10. PROVIDE GAS REGULATOR TO REDUCE PRESSURE DOWN TO 0.5" W.C. AND WITH A TOTAL LOAD OF 595 MBH. ROUTE 2" GAS LINE UP ALONG WALL AND INTO CEILING SPACE AND ROUTE AS SHOWN.
11. PROVIDE GAS REGULATOR TO REDUCE PRESSURE DOWN TO 0.5" W.C. AND WITH A TOTAL LOAD OF 630 MBH. ROUTE 2" GAS LINE UP ALONG WALL AND INTO CEILING SPACE AND ROUTE AS SHOWN.

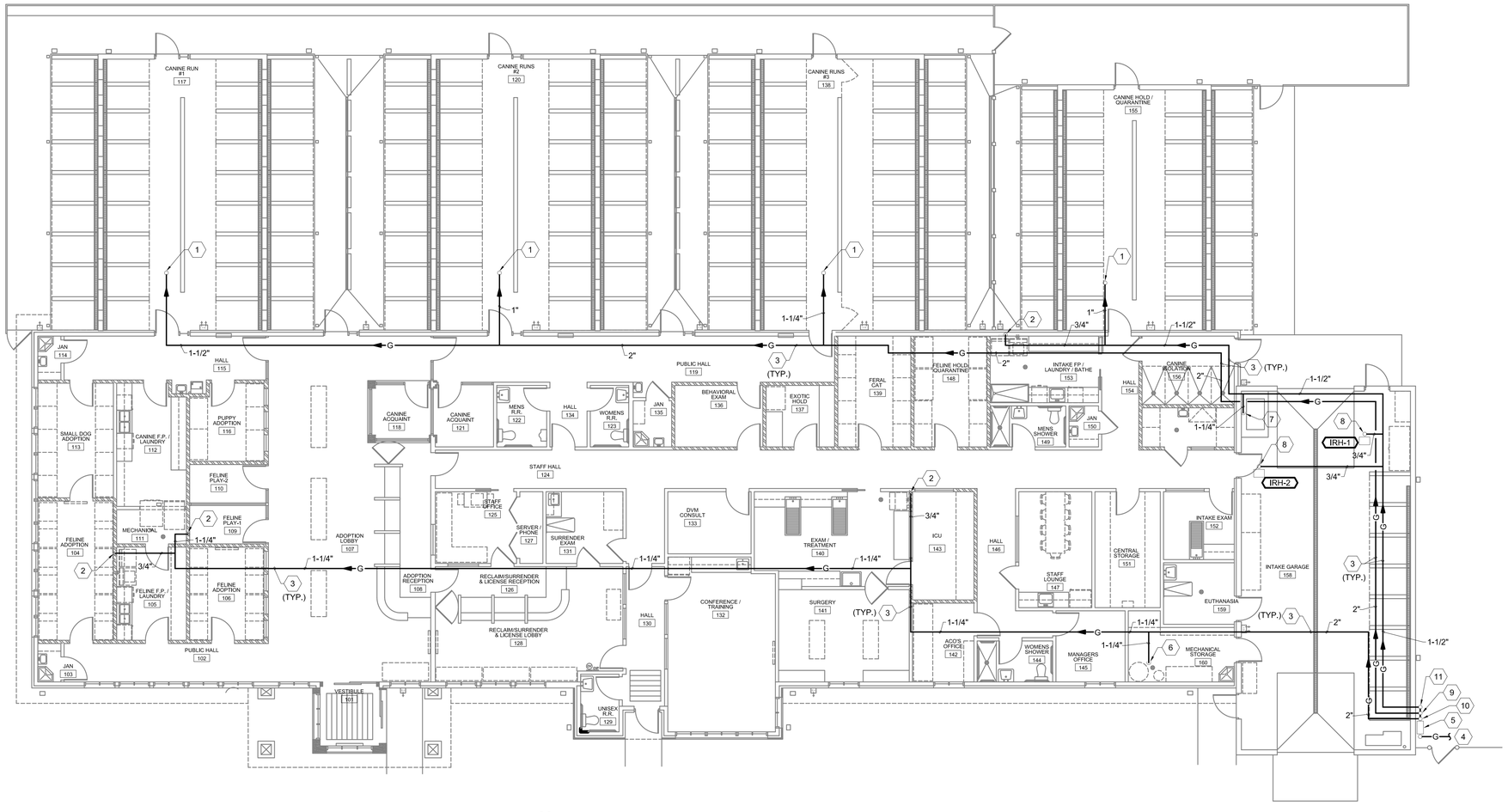

A1 PLUMBING GAS PLAN
1/8"=1'-0"

PROJECT NORTH

901 Lamberton Pl. NE
Albuquerque, NM 87107
Phone: (505) 858-0180
Fax: (505) 858-0111
Email: info@bdaarc.com

The documents transmitted herein are the sole Intellectual Property of BDA Architecture, P.C. Any use, reuse, or reproduction in any form without the express written consent of, and compensation to BDA Architecture is a violation of federal law.

BDA

STATE OF NEVADA PROFESSIONAL ENGINEER DAVID C. GRAHAM 2/27/2015 MECHANICAL NO. 018149

15016 EXP. 6/30/15

CARSON CITY ANIMAL SERVICES

549 Airport Road
Carson City, Nevada 89701
City of Carson City

Copyright, 2015, BDA ARCHITECTURE PC.

PLUMBING GAS PLAN

REV.#	DATE:	COMMENTS
REVISION: -		
REVISION: -		
REVISION: -		
REVISION: -		

REVIEWS	
INITIALS	BDA DSGN. REV.
	BDA TECH REV.

CCAS

PROJECT NO.: 1107
DRAWN: TD
DATE: 2/27/2015

P104
OF

THE RESPONSE GROUP, INC.
An Electrical/Mechanical Engineering Corporation
11930 Menaul N.E. Suite 214
Albuquerque, New Mexico 87112
Phone:(505) 323-7629 Fax:(505) 323-7594
E-mail: theresponsegroup@trg-inc.net

Save Date: February 27, 2015 - 1:56 PM - Torrid
Plot Date: February 27, 2015 - 2:11 PM
Drawing Name: Z:\Projects\2015\15011\15011 Carson City, NV Animal Services\15016 - P104 - Plumbing Plan Gas.dwg

GENERAL NOTES

A. REFER TO PLUMBING SHEET P101 FOR GENERAL NOTES.

KEYED NOTES

1. GAS LINE UP FROM BELOW TO ROOF TOP UNIT. CONNECT WITH UNION, GAS VALVE, DIRT LEG AND FLEX CONNECTION. REFER TO P102 FOR CONTINUATION.
2. CONDENSATE WITH P-TRAP SHALL TERMINATE ON ROOF TOP.
3. 3/4" MAKE-UP WATER UP FROM BELOW TO EVAPORATIVE COOLERS. CONNECT PER MANUFACTURE'S REQUIREMENTS. REFER TO P102 FOR CONTINUATION.

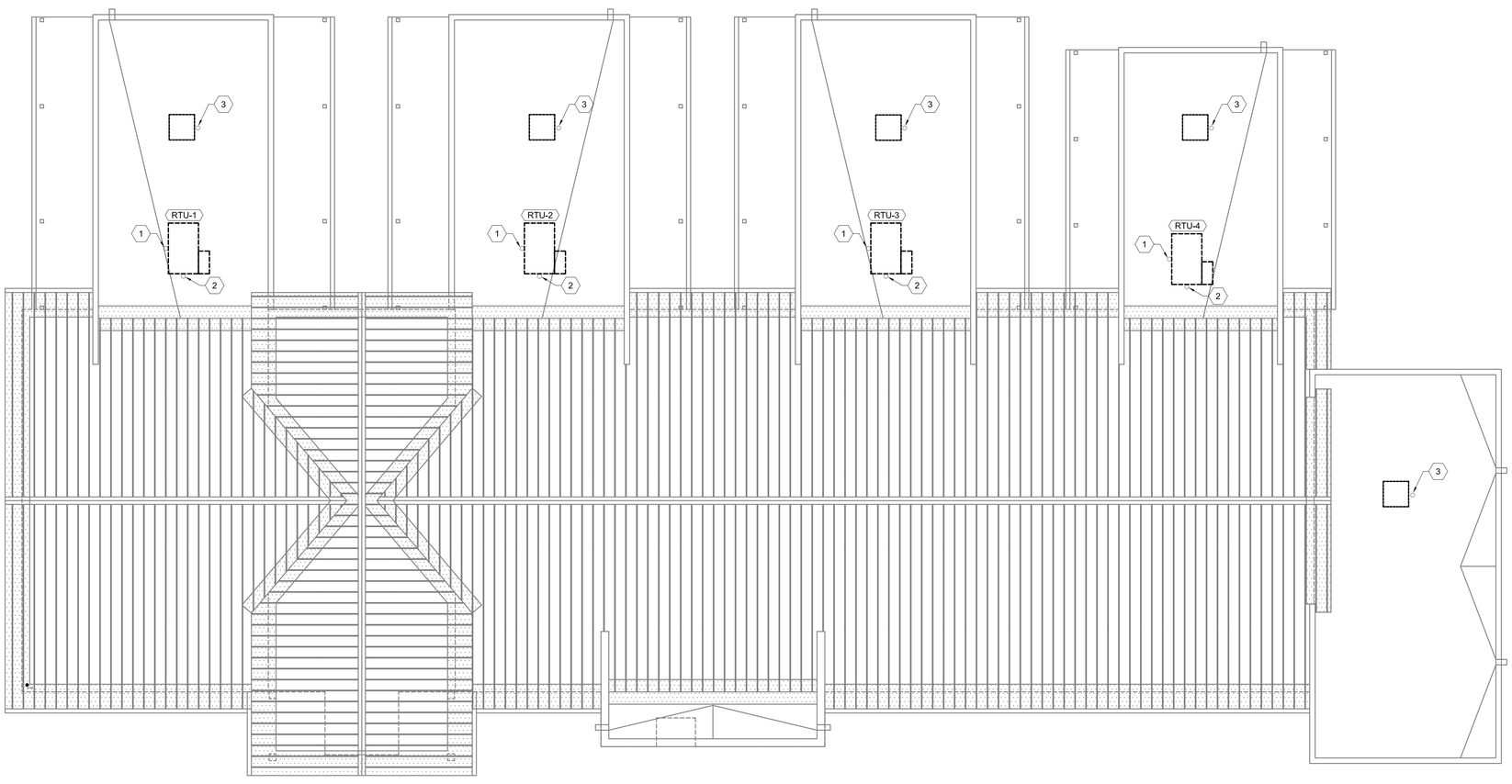

A1 PLUMBING ROOF PLAN
1/8"=1'-0"

PROJECT NORTH

THE RESPONSE GROUP, INC.
An Electrical/Mechanical Engineering Corporation
11930 Menaul N.E. Suite 214
Albuquerque, New Mexico 87112
Phone:(505) 323-7629 Fax:(505) 323-7594
E-mail: theresponsegroup@trg-inc.net

901 Lamberton Pl. NE
Albuquerque, NM 87107
Phone: (505) 858-0180
Fax: (505) 858-0111
Email: info@bdaarc.com

The documents transmitted herein are the sole Intellectual Property of BDA Architecture, P.C. Any use, reuse, or reproduction in any form without the express written consent of, and compensation to, BDA Architecture is a violation of federal law.

BDA

PROFESSIONAL ENGINEER : STATE OF NEVADA
DAVID C. GRAHAM
2/27/2015
MECHANICAL
No.018498
15016
P. 6/30/15

CARSON CITY ANIMAL SERVICES

549 Airport Road
Carson City, Nevada 89701
City of Carson City

Copyright, 2015, BDA ARCHITECTURE PC.

PLUMBING ROOF PLAN

REV.#	DATE	COMMENTS
REVISION: -		
REVISION: -		
REVISION: -		
REVISION: -		

REVIEWS

INITIALS	
	BDA DSGN. REV.
	BDA TECH REV.

CCAS

PROJECT NO.: 1107
DRAWN: -
DATE: 2/27/2015

P105
OF

Save Date: February 27, 2015 - 1:56 PM - Tomd
Plot Date: February 27, 2015 - 2:13 PM
Drawing Name: Z:\Projects\2015\115011 Carson City, NV Animal Services\15016 - P105 - Plumbing Roof Plan.dwg

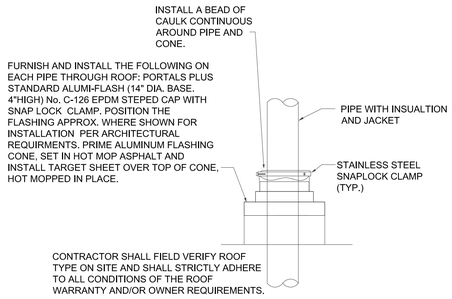

PIPE THROUGH ROOF

NO SCALE

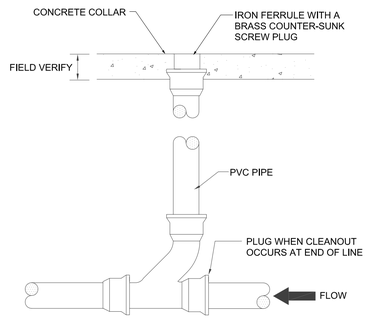

CLEANOUT DETAIL

NO SCALE

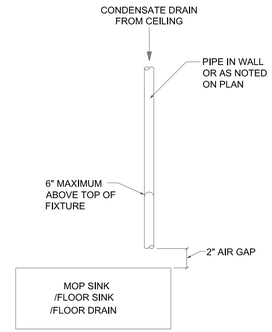

CONDENSATE DRAIN DETAIL

NO SCALE

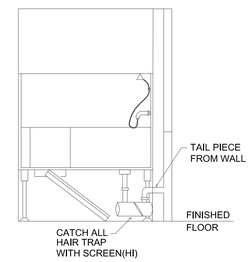

BATHING TUB DETAIL

NO SCALE

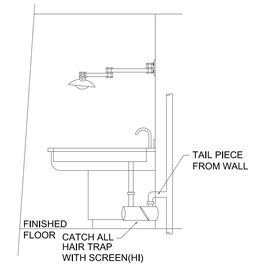

HAIR INTERCEPTOR DETAIL

NO SCALE

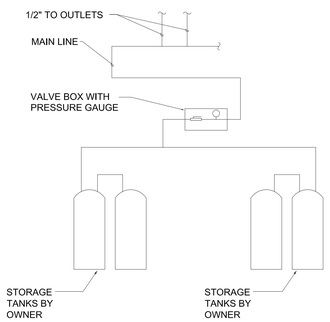

NOTE: ALL HOSES/PIPES TO BE OWNER-PROVIDED EQUIPMENT SHALL BE SIZED AND INSTALLED PER MANUFACTURER'S REQUIREMENTS.

TYPICAL OXYGEN PIPING DIAGRAM

NO SCALE

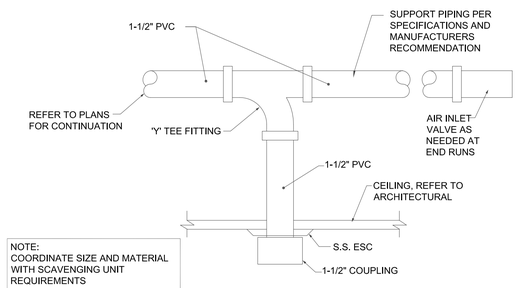

NOTE:
COORDINATE SIZE AND MATERIAL WITH SCAVENGING UNIT REQUIREMENTS

ANESTHESIA EVAC DETAIL

NO SCALE

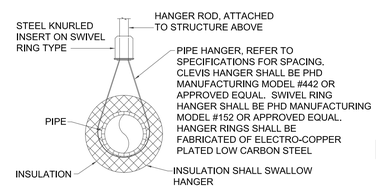

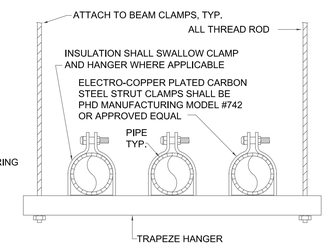

PIPE HANGERS SHOWN HERE NOT TO BE USED FOR CHW OR CONDENSATE PIPING

PIPE HANGER DETAIL

NO SCALE

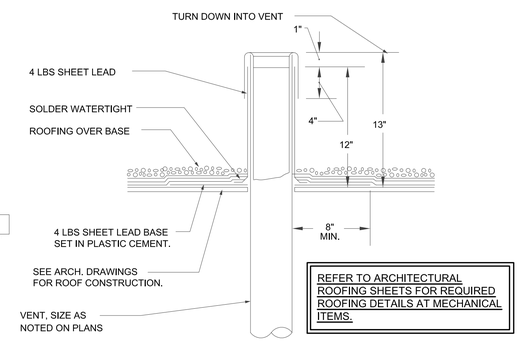

REFER TO ARCHITECTURAL ROOFING SHEETS FOR REQUIRED ROOFING DETAILS AT MECHANICAL ITEMS.

VENT THRU ROOF DETAIL

NO SCALE

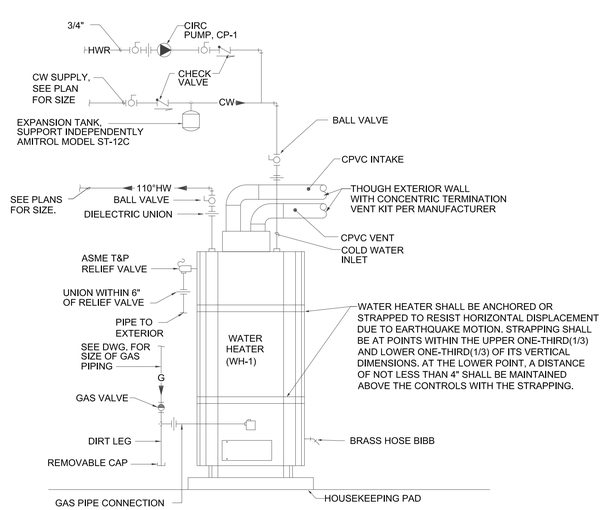

GAS WATER HEATER PIPING SCHEMATIC

NO SCALE

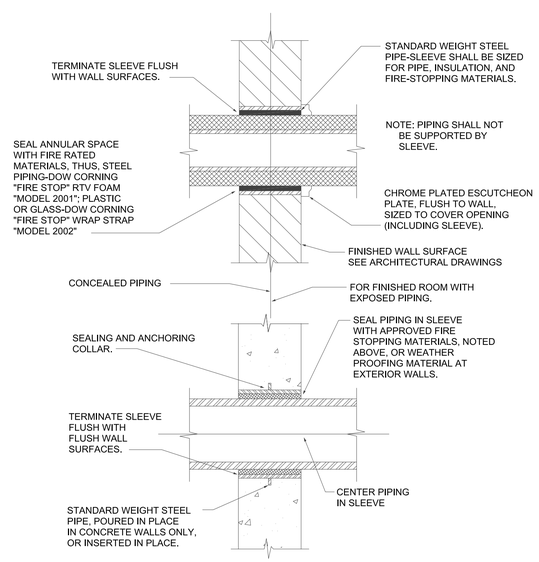

PIPE SLEEVE THRU WALL DETAIL

NO SCALE

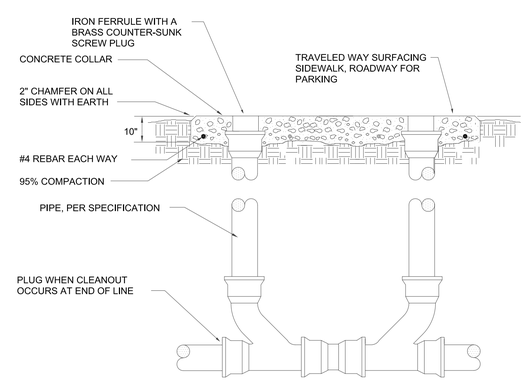

DOUBLE CLEANOUT DETAIL

NO SCALE

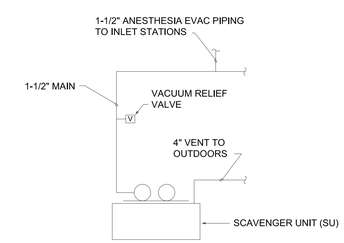

ANESTHESIA EVAC PIPING DIAGRAM

NO SCALE

THE RESPONSE GROUP, INC.
An Electrical/Mechanical Engineering Corporation
11930 Menaul N.E. Suite 214
Albuquerque, New Mexico 87112
Phone:(505) 323-7629 Fax:(505) 323-7594
E-mail: theresponsegroup@trg-inc.net

901 Lamberton Pl. NE
Albuquerque, NM 87107
Phone: (505) 858-0180
Fax: (505) 858-0111
Email: info@bdaarc.com

The documents transmitted herein are the sole Intellectual Property of BDA Architecture, P.C. Any use, reuse, or reproduction in any form without the express written consent of, and compensation to, BDA Architecture is a violation of federal law.

BDA

STATE OF NEVADA PROFESSIONAL ENGINEER DAVID C. GRAHAM MECHANICAL No. 018498 6/30/16

15016

CARSON CITY ANIMAL SERVICES

549 Airport Road
Carson City, Nevada 89701
City of Carson City

Copyright, 2015, BDA ARCHITECTURE PC.

PLUMBING DETAILS

REV.#	DATE	COMMENTS
REVISION: -		
REVISION: -		
REVISION: -		
REVISION: -		

REVIEWS	
INITIALS	
	BDA DSGN. REV.
	BDA TECH REV.

CCAS

PROJECT NO.: 1107
DRAWN: CMB/TD
DATE: 2/27/2015

P501

OF

Save Date: February 27, 2015 - 1:56 PM - Tomd
Plot Date: February 27, 2015 - 2:16 PM
Drawing Name: Z:\Projects\2015\15011\01 Carson City, NV Animal Services\15016 - P501 - Plumbing Details.dwg

PLUMBING EQUIPMENT SCHEDULE

SYMBOL	DESCRIPTION
DCO	EXTERIOR CLEANOUTS: (2) ROUND 4" COVER. SIZE SAME AS WASTE LINE SERVED BY C.O. ADJUSTABLE TO CONCRETE COLLAR WITH FLAT TOP, STANDARD CI PIPE, SEE DETAIL.
FCO	FINISH FLOOR CLEANOUT: SMITH MODEL 4023S DUCO CAST IRON CLEANOUT, 4" ROUND POLISHED BRONZE COVER.
WCO	WALL CLEANOUT: SMITH MODEL 4472T DURA-COATED CAST IRON CLEANOUT TEE WITH CADMIUM PLATED CAST IRON COUNTERSUNK PLUG AND STAINLESS STEEL COVER. SIZE SAME AS WASTE LINE SERVED BY CLEANOUT.
FS	FLOOR SINK: J.R. SMITH SANI-CEPTOR ACID RESISTANT COATED FLOOR & INDIRECT WASTE DRAINS; MODEL 3150-13, CAST IRON FLANGED RECEPTOR WITH SEEPAGE HOLES, ACID RESISTANT COATED INTERIOR, NICKEL BRONZE RIM AND 3/4 GRATE. PROVIDE WITH 1/2" TRAP PRIMER CONNECTION. SIZE PER PLANS.
HB1	HOSE BIBB WALL HYDRANT: INSTALL AT 36" A.F.F., WOODFORD HOT AND COLD MODEL V22. ANTI-SIPHON PROTECTED WITH INTEGRAL CHECK AND ATMOSPHERIC VENT, C AND H INLET CONNECTIONS 1/2" FEMALE SOLDER. PROVIDE WITH DRY-WALL MOUNTING PLATE (DMP). APPROVED UNDER ASSE 1019 TYPE C.
HB2	HOSE BIBB / WALL HYDRANT: ZURN MODEL Z1327-EZ, ENCASED HOT/COLD WALL HYDRANT WITH HANDLES FOR HOT AND COLD. 3/4" IP FEMALE INLETS CONNECTION AND 3/4" MALE HOSE CONNECTION STANDARD, STAINLESS STEEL BOX (LESS HINGED COVER) AND ADAPTER VACUUM BREAKER. INSTALL 36" A.F.F..
ET	EXPANSION TANK: AMTROL ST-C SERIES MODEL ST-12-C PRE-PRESSURIZED TANK WITH SEALED IN AIR CHARGE OF 55 PSI. SIZE: TANK VOLUME=6.4 GAL., 3.2 GAL MAXIMUM RECOMMENDED ACCEPTANCE VOLUME.
WH-1	WATER HEATER: A.O. SMITH CYCLONE MXI MODEL BTH400A, 119 GALLON STORAGE CAPACITY, 95% EFFICIENCY RATING, 460 GPH RECOVERY AT 100 DEG. TEMPERATURE RISE. 150,000 BTUH INPUT, 1-1/2"" HW, 1-1/2" CW, 3" VENT, 1-1/2" GAS. PROVIDE AND INSTALL CONCENTRIC WALL TERMINATIONS PER MANUFACTURER'S REQUIREMENTS.
OM	OXYGEN MANIFOLD: AMICO C3 CSA MANIFOLD MODEL M2H-C3-D-U-OXY. MANIFOLD SHALL SWITCH FROM "RIGHT BANK IN USE" TO "LEFT BANK IN USE" ONCE THE RIGHT BANK DEPLETES. MANUAL OPERATION SHALL BE REQUIRED AT THE TIME OF CHANGING CYLINDERS TO UNSURE SWITCHOVER BY MOVING LEVER. PRESSURE SWITCH CONTROLS REMOTE ALARMS WHICH INDICATE "RIGHT BANK IN USE" TO "LEFT BANK IN USE" SUPPLY SWITCH-OVER AND THAT CYLINDER REPLACEMENT IS NECESSARY. PROVIDE WITH HEADER BAR ASSEMBLY M2-HBTC-02U-OXY AND WALL BRACKET FOR HEADER BAR ASSEMBLY, MODEL: M2-X-MAN-SUP. PROVIDE ALL REQUIRED FITTINGS FOR OPERATION AS REQUIRED.
O2	OXYGEN GAS CEILING OUTLET: AMICO ALERT-1 SERIES OUTLET, MODEL O-DISCEI-E-OXY FOR OXYGEN: CEILING MOUNTED OUTLET WITH DISTRIBUTION TYPE CONNECTION. OFCI DROP HOSE, END FITTINGS AND LENGTH OF HOSE AS SELECTED BY OWNER.
AE	ANESTHESIA EVAC OUTLET: 1-1/2" DIA. SCHEDULE 40 PVC WITH LOOSE CAP. SEE DETAIL FOR MORE INFORMATION.
SU	SCAVENGER UNIT: ANESTHESIA EVACUATION: MODEL: VETROSON ACTIVE ANESTHESIA SCAVENGER, SUMMIT HILL LABORATORIES. PROVIDE SYSTEM COMPLETE, INCLUDING POWER UNIT, VENT PIPE, DISTRIBUTION PIPING, PIPING CONNECTIONS, HOSE AND HOSE DROPS (AT EACH LOCATION), SCAVENGING INTERFACE AND CARRIER INLET VALVE(S).
MGAB	MEDICAL GAS ALARM BUZZER: AMICO UNIVERSAL REMOTE ALARM BUZZER MANIFOLD M2-REM-AL-NEMA, FOR (2) OXYGEN SENSORS, BUILT IN POWER SUPPLY ACCEPTS 110V AC TO 240V AC (50 TO 60HZ). COORDINATE LAYOUT WITH OTHER DISCIPLINES.
MGVB-1	MEDICAL GAS VALVE BOX: AMICO SINGLE ZONE VALVE BOX, MODEL VBU-N05 WITH (1) AMICO VV-ISO-G-05 SECTION ISOLATION VALVE WITH GAUGE PORT AND PRE-ATTACHED EXTENSIONS. 3-PIECE, FULL PORT BALL VALVE.
WB	WASHER BOX: OATEY 38970, 1/4 TURN 1/2" HW AND 1/2" CW MIPxSWEAT VALVES WITH MOUNTED WATER HAMMER ARRESTORS, AND WASHER BOX FABRICATED OF MOLDED PLASTIC, 2" VENT AND 2" WASTE CONNECTIONS.
EW	MODEL 7610 BARRIER-FREE SINK/COUNTERTOP EYE/FACE WASH SHALL INCLUDE AN AXION MSR EYE/FACE WASH HEAD TO PROTECT AGAINST THE GROWTH OF MOLD AND MILDEW ON THE TREATED COMPONENTS, AND SHALL FEATURE INVERTED DIRECTIONAL LAMINAR FLOW WHICH ACHIEVES ZERO VERTICAL VELOCITY SUPPLIED BY AN INTEGRAL FLOW CONTROL. ALSO INCLUDE, POLISHED CHROME BRASS SINGLE ACTION PULL-DOWN VALVE BODY, WHEEL CHAIR ACCESSIBILITY, UNIVERSAL SIGN, AND 1/2" O.D. SLIP JOINT INLET. CONNECTION SIZES: 1/2" HW, 1/2" CW 3/4" OUTLET.
IB	ICE MACHINE OUTLET BOX: OATEY 38607 6" X 6" HIGH IMPACT POLYSTYRENE WITH 1/4 TURN BRASS BALL VALVE-COPPER SWEAT, OR EQUAL.
CP-1	HOT WATER CIRCULATOR: BELL & GOSSETT MODEL NBF-12F/LW IN-LINE PUMP. ALL BRONZE, 55 WATTS,
BV	BELL & GOSSETT: MODEL CB-3/4S, POSITIVE SHUTOFF, MEMORY SETTINGS, CONNECT: SOLDIER, APPRV: TACO FDI, MEPCO.
TD1	TRENCH DRAIN: TRI-STAR TRENCH DRAIN SYSTEM WITH CATCH BASIN. COORDINATE WITH MANUFACTURE FOR COMPLETE SPECIFICATION.
TD2	TRENCH DRAIN: NDS MINI CHANNEL TRENCH DRAIN, 3" PRO SERIES CHANNEL DRAINS TRENCH DRAIN, LIGHT TRAFFIC DRAIN SYSTEM WITH 40" MODULAR CHANNELS. COORDINATE WITH ARCHITECT.
TD3	TRENCH DRAIN: JAY R. SMITH 9930 SERIES ENVIRO-FLO II TRENCH DRAIN SYSTEM. 3.28 FEET 100% POLYPROPYLENE POST INDUSTRIAL RECYCLED MATERIAL WITH U.V. INHIBITORS. CHANNEL OF INTERLOCKING DESIGN WITH A BUILT-IN SLOPE OF 0.6% WITH RADIUSED BOTTOM. SUPPLIED WITH SECURED GRATE. COORDINATE WITH ARCHITECT.
FD1	FLOOR DRAIN: ZURN - LIGHT COMMERCIAL, MODEL FD2290-NH3, CAST IRON BODY AND CLAMP COLLAR AND ADJUSTABLE HEAD WITH NICKEL BRONZE STRAINER ASSEMBLY. PROVIDE WITH TRAP PRIMER CONNECTION.
FD2	FLOOR DRAIN: JAY R SMITH 3161Y, 12" SQUARE TOP AND 10" DEEP WITH SEDIMENT BUCKET. CAST IRON FLANGED RECEPTOR WITH SEEPAGE HOLES, ACID RESISTANT COATED INTERIOR, NICKEL BRONZE RIM AND SECURED GRATE, WITH NB RIM AND HINGED GRATE. PROVIDE WITH TRAP PRIMER CONNECTION.
TP	TRAP PRIMER: PRECISION PLUMBING PRODUCT, INC. "PRIME-RITE" TRAP PRIMER VALVE. MACHINED BRASS, 1/2" MALE NPT INLET, 1/2" FEMALE OUTLET. PRESSURE DROP ACTIVATED TYPE WITH SEDIMENT FILTER AND AIR GAP, CONTINUOUS FLOW TYPE NOT ALLOWED. PROVIDE DISTRIBUTION UNIT FOR MULTIPLE FLOOR DRAINS WHERE SHOWN ON DRAWINGS.
HI	HAIR INTERCEPTOR: MARBLE PRODUCTS CATCH-ALL HAIR TRAP IN LIEU OF FIXTURE 'P' TRAP, WITH REMOVEABLE PERFORATED SCREEN. 1-1/2" THREADED INLET AND OUTLET.
BFP1	REDUCED PRESSURE BACKFLOW PREVENTER: WATTS SERIES LF009 LEAD FREE REDUCED PRESSURE ZONE ASSEMBLY WITH TWO IN-LINE INDEPENDENT CHECK VALVES, CAPTURED SPRINGS AND REPLACEABLE CHECK SEATS WITH AN INTERMEDIATE RELIEF VALVE. SIZE 2".
BFP2	REDUCED PRESSURE BACKFLOW PREVENTER: FEBCO LF880V LEAD FREE MASTERSERIES CONFIGURABLE DESIGN REDUCED PRESSURE ZONE ASSEMBLY. VERTICAL STYLE REDUCED PRESSURE ZONE ASSEMBLY DUCTILE IRON BODY WITH OS&Y RESILIENT WEDGE GATE VALVES. SIZE PER FIRE PROTECTION HYDRAULIC CALCULATIONS.
BFP3	REDUCED PRESSURE BACKFLOW PREVENTER: WATTS SERIES LF009 LEAD FREE REDUCED PRESSURE ZONE ASSEMBLY WITH TWO IN-LINE INDEPENDENT CHECK VALVES, CAPTURED SPRINGS AND REPLACEABLE CHECK SEATS WITH AN INTERMEDIATE RELIEF VALVE. SIZE 1-1/4".
WHA-1	WATER HAMMER ARRESTOR: STAINLESS STEEL CONSTRUCTION, PRE-CHARGED, PERMANENTLY SEALED. PIPE SIZE: 3/4", P.D.I. UNIT RATING: 1-11, MFG.: JAY R. SMITH FIG. NO. 5005.

NOTE:

USE OF PVC PIPE FOR ROOF DRAIN, WASTE AND VENT PIPING IS AN APPROVED SUBSTITUTE PER ARCHITECT, OWNER AND AUTHORITY HAVING JURISDICTION (AHJ). INSTALLATION OF PVC PIPE SHALL BE PER ASTM STANDARDS AND PIPE MANUFACTURER'S INSTALLATION REQUIREMENTS.

PER OWNER'S AND ARCHITECT'S WRITTEN APPROVAL ALONG WITH THE APPROVAL OF (AHJ), USE OF PEX TUBING FOR DOMESTIC WATER PIPING IS AN APPROVED SUBSTITUTE. PLUMBING PLANS ARE DESIGNED FOR CPVC AND IT WOULD BE THE CONTRACTOR'S RESPONSIBILITY FOR THE RE-DESIGN OF THE DOMESTIC WATER CPVC SYSTEM TO A PEX TUBING SYSTEM.

PLUMBING FIXTURE SCHEDULE

SYMBOL	DESCRIPTION
WCH	WATER CLOSET, ADA: AMERICAN STANDARD 3472.128, MAIN STREAM FLOWISE ROUND FRONT COMPLETE HET TOILET, VITREOUS CHINA TANK TYPE, FLOOR MOUNTED, HIGH EFFICIENCY 1.28 GPF SYSTEM, 16-1/2" RIM. WITH EVERCLEAN SEAT AND COVER. WAX RING GASKET WITH CLOSET BOLTS. PROVIDE WITH WATTS STAINLESS STEEL FLEXIBLE RISER, ANGLE STOPS, TRIP LEVER, CHINA BOLT CAPS, TANK AND TANK COVER. COLOR: WHITE CONNECTION SIZES: CW=1/2", WD=3"
UR	URINAL: AMERICAN STANDARD 6590.501, 0.5 GPF EXPOSED TOP SPUD URINAL AND MANUAL PISTON-TYPE URINAL FLUSH VALVE, VITREOUS CHINA, ULTRA HIGH EFFICIENCY, FLUSHING RIM, ELONGATED 14" RIM FROM FINISHED WALL, WASHOUT FLUSH ACTION, 2 WALL HANGERS, 3/4" I.P.S. ANGLE STOP WITH BACK-FLOW PROTECTION AND VANDAL RESISTANT CAP. FLOW REQUIREMENT IS 10 GPM AND IS ADA COMPLIANT. PROVIDE WITH JR SMITH MODEL 0614 LABOR SAVER URINAL SUPPORT. COLOR: WHITE CONNECTION SIZES: CW=3/4", WD=2"
LAVH	LAVATORY, ADA: AMERICAN STANDARD LUCERNE WALL HUNG LAVATORY 0355.012, 20-1/2"X18-1/4" VITREOUS CHINA, WALL HUNG LAVATORY WITH GRID DRAIN. PROVIDE WITH WATTS STAINLESS STEEL FLEXIBLE RISER, ANGLE STOPS, CHICAGO 2200-4E2805ABCP FAUCET SINGLE LEVER FAUCET (0.5 GPM AERATOR), P-TRAP, TRUEBRO 102/103-W INSULATION KIT AND J.R. SMITH CONCEALED WALL HANGER NO. 0700. SEE MANUFACTURER'S ROUGH-IN INSTRUCTIONS PRIOR TO ROUGH-IN FOR PROPER MOUNTING DETAILS. CONNECTION SIZES: CW=1/2", HW=1/2", WD=1-1/2"
LAV	LAVATORY: ELKAY SEHS-17 WALL MOUNTED HAND SINK, 20 GAUGE, 300 SERIES STAINLESS STEEL, WITH GOOSE NECK FAUCET AND STRAINER. PROVIDE WITH P-TRAP, OVERFLOW, GRID DRAIN, ANGLE STOPS, AND FLEXIBLE RISERS. CONNECTION SIZES: CW=1/2", HW=1/2", WD=1-1/2"
CS-1	COUNTER SINK: MOEN 1800 SERIES MODEL NO. G181953, 25"X22"X10", 18 GA., TYPE 301 NICKEL-BEARING STAINLESS STEEL, SINGLE COMPARTMENT, COATED UNDERSIDE, 2-HOLE. PROVIDE T&S BRASS B-0892-133X GOOSE NECK FAUCET WITH 4" WRIST BLADE HANDLES, KEENEY MFG. CO. STAINLESS STEEL STRAINER K5410, WATTS STAINLESS STEEL FLEXIBLE RISERS, ANGLE STOPS AND P-TRAP. CONNECTION SIZES: CW=1/2", HW=1/2", WD=1-1/2"
CS-2	COUNTER SINK: MOEN 2000 SERIES MODEL NO. G202334 32"X22"X9", 20 GA., TYPE 301 NICKEL-BEARING STAINLESS STEEL, DOUBLE BOWL KITCHEN SINK W/COATED UNDERSIDE, 4-HOLE.PROVIDE CHICAGO 200-AGN8AE3-317AB FAUCET WITH SIDE SPRAY AND 4" WRIST BLADE HANDLES AND SPRAYER, (2)KEENEY MFG. CO. STAINLESS STEEL STRAINERS K5410, WATTS STAINLESS STEEL FLEXIBLE RISERS, ANGLE STOPS AND P-TRAP. CONNECTION SIZES: CW=1/2", HW=1/2", WD=1-1/2"
CS-3	COUNTER SINK: MOEN NO. 22856, 15"X15"X5", 22 GA., TYPE 301 NICKEL-BEARING STAINLESS STEEL, SINGLE COMPARTMENT, COATED UNDERSIDE, 2-HOLE. PROVIDE T&S BRASS B-0892-133X GOOSE NECK FAUCET WITH 4" WRIST BLADE HANDLES, KEENEY MFG. CO. STAINLESS STEEL STRAINER K5410, WATTS STAINLESS STEEL FLEXIBLE RISERS, ANGLE STOPS AND P-TRAP. CONNECTION SIZES: CW=1/2", HW=1/2", WD=1-1/2"
MS	SERVICE SINK: FIAT MSB-2424 MOLDED STONE MOP BASIN, 24"X24"X12" 12" HIGH WITH 6" DROP FRONT. 830-AA CHROME SERVICE FAUCET WITH VACUUM BREAKER, INTERGRAL STOPS, ADJUSTABLE WALL BRACE, PAIL HOOK AND "HOSE THREAD ON SPOUT. 832-AA HOSE/HOOK, 889-CC HANGER AND CAST IRON P-TRAP. PROVIDE SOLID BLOCKING BEHIND DRYWALL FOR MOUNTING ADJUSTABLE WALL BRACE. CONNECTION SIZES: CW=1/2", HW=1/2", WD=3"
SS-1	SCRUB SINK: TRI-STAR #300-55 (23-1/2"Lx48"Wx16-1/2"H) WITH (2) #5EF-ID-WGB FAUCETS. CONTRACTOR SHALL COORDINATE WITH OWNER AND MANUFACTURER FOR CONNECTION SIZES, ROUGH-IN REQUIREMENTS AND NECESSARY ACCESSORIES. CONTRACTOR SHALL PROVIDE (AS REQUIRED) FAUCET, MOUNTING BRACKETS, GRID DRAIN, ANGLE STOPS, FLEXIBLE RISERS AND P-TRAP.
TT-1	TUB TABLE UNIT (60" DEEP TUB): TRI-STAR TABLE & FAUCET (OWNER FURNISHED, CONTRACTOR INSTALLED). TRI-STAR FAUCET KIT. COORDINATE WITH GENERAL CONTRACTOR FOR ROUGH-IN REQUIREMENTS OF BASE AND TABLE. PROVIDE AND INSTALL IN-LINE VACUUM BREAKER, WALL CONNECTION AND HAIR INTERCEPTOR. SEE HAIR INTERCEPTOR (HI) FOR ADDITIONAL INFORMATION, VERIFY HAIR INTERCEPTOR CLEARANCE FOR ROUTINE CLEANING PRIOR TO ROUGH-IN. PROVIDE WITH WATTS STAINLESS STEEL FLEXIBLE RISERS, ANGLE STOPS AND P-TRAP. CONNECTION SIZES: VENT=2", CW=1/2", HW=1/2", WD=2".
BT-1	BATHING TUB: TRI-STAR TUB & FAUCET (OWNER FURNISHED, CONTRACTOR INSTALLED), TRI-STAR FAUCET KIT. COORDINATE WITH GENERAL CONTRACTOR FOR ROUGH-IN REQUIREMENTS OF BASE AND TABLE. PROVIDE AND INSTALL IN-LINE VACUUM BREAKER, WALL CONNECTION AND HAIR INTERCEPTOR. SEE HAIR INTERCEPTOR (HI) FOR ADDITIONAL INFORMATION, VERIFY HAIR INTERCEPTOR CLEARANCE FOR ROUTINE CLEANING PRIOR TO ROUGH-IN. PROVIDE WITH WATTS STAINLESS STEEL FLEXIBLE RISERS, ANGLE STOPS AND P-TRAP. CONNECTION SIZES: VENT=2", CW=1/2", HW=1/2", WD=2".
SH-1	ROLL-IN SHOWER: AQUA BATH MODEL A C6530TD 3/4", ONE PIECE BARRIER-FREE ROLL-IN SHOWER MODULE, (COORDINATE RIGHT OR LEFT HAND OUTLET WITH ARCHITECTURAL DRAWINGS), COMPONENTS ARE TO INCLUDE ON FULL LENGTH STAINLESS STEEL GRAB BAR PER MANUFACTURER, A STAINLESS STEEL CURTAIN ROD WITH SHOWER CURTAIN(ANTIBACTERIAL) WITH HOOKS. PROVIDED WITH PRESSURE BALANCED SINGLE LEVER MIXING VALVE WITH CHECK STOPS, THERMOSTATICALLY CONTROLLED, SINGLE LEVER MIXING VALVE WITH CHECK STOPS, HAND HELD SHOWER WITH SWIVEL FITTING, 60" FLEXIBLE STAINLESS STEEL HOSE, AND AN IN-LINE VACUUM BREAKER, 24" SLIDE BAR (FOR HAND HELD SHOWER ATTACHMENT), AND BRASS DRAIN. CONNECTION SIZES: VENT=1-1/2", CW=1/2", HW=1/2", WD=1-1/2".
DF	DRINKING FOUNTAIN: ELKAY VRCGRN8, GREENSPEC LISTED, HIGH EFFICIENCY WALL MOUNT WATER COOLER, VANDAL-RESISTANT, BARRIER-FREE ACCESS, ADA COMPLIANT AND NO LEAD DESIGN. UNIT CAN BE MOUNTED TO MEET ADA OR CHILD ADA SPECIFICATIONS. THE R-134A REFRIGERATION SYSTEM IS HERMETICALLY SEALED AND DELIVERS A MINIMUM OF 8 GPH OF WATER AT 50° F COOLED FROM 80° F INLET WATER AT 90° F AMBIENT. ELECTRICAL REQUIREMENTS, 115V/60HZ, 2.8 F.L. AMPS, 260 RATED WATTS.

NOTE:

PROVIDE SEISMIC RESTRAINTS/SUPPORTS FOR ALL EQUIPMENT, PIPING, ETC., AS REQUIRED BY LOCAL AND STATE CODES.

PLUMBING LEGEND

CW	DOMESTIC COLD WATER (CW)
HW	DOMESTIC HOT WATER (HW)
HWC	HOT WATER RECIRCULATING (HWC)
SS	SANITARY SEWER (SS)
V	VENT (V)
O2	OXYGEN (O2)
AE	ANESTHESIA EVAC (AE)
D	CONDENSATE DRAIN (D)
(E) CW	EXISTING COLD WATER (CW)
(E) SS	EXISTING SANITARY SEWER
(E) V	EXISTING VENT
(E) D	EXISTING CONDENSATE DRAIN
	VENT UNDER SLAB
	PIPE IN SLEEVE
	DROP
	RISE
	BRANCH
	CHECK VALVE
	GATE VALVE
	VENT THROUGH ROOF (VTR)
	CLEAN OUT (CO)
	DOUBLE CLEAN OUT (DCO)
	WALL CLEAN OUT (WCO)
	BALL VALVE
	VALVE IN RISER
	BALANCING COCK
	PLUG VALVE
	SOLENOID VALVE
	DIELECTRIC UNION
OM	OXYGEN MANIFOLD
	PRESSURE SENSOR
MGVB	MEDICAL GAS VALVE BOX (MGVB)
MGAB	MEDICAL GAS ALARM BUZZER (MGAB)
AE	ANESTHESIA EVAC OUTLET (SEE PLANS FOR CEILING OR WALL OUTLET)
O2	OXYGEN OUTLET (SEE PLANS FOR CEILING OR WALL OUTLET)
(E)	EXISTING

901 Lamberton Pl. NE
Albuquerque, NM 87107
Phone: (505) 858-0180
Fax: (505) 858-0111
Email: info@bdaarc.com

The documents transmitted herein are the sole Intellectual Property of BDA Architecture, P.C. Any use, reuse, or reproduction in any form without the express written consent of, and compensation to, BDA Architecture is a violation of federal law.

BDA

STATE OF NEVADA PROFESSIONAL ENGINEER DAVID C. GRAHAM 2/27/2015 MECHANICAL NO. 18498

15016 6/30/16

CARSON CITY ANIMAL SERVICES
549 Airport Road
Carson City, Nevada 89701
City of Carson City

Copyright, 2015, BDA ARCHITECTURE PC.

PLUMBING SCHEDULES

REV.#	DATE	COMMENTS
REVISION: -		
REVISION: -		
REVISION: -		
REVISION: -		

REVIEWS

INITIALS	
	BDA DSGN. REV.
	BDA TECH REV.

THE RESPONSE GROUP, INC.
An Electrical/Mechanical Engineering Corporation
11930 Menaul N.E. Suite 214
Albuquerque, New Mexico 87112
Phone:(505) 323-7629 Fax:(505) 323-7594
E-mail: theresponsegroup@trg-inc.net

CCAS

PROJECT NO.: 1107
DRAWN: -
DATE: 2/27/2015

P601

OF

Save Date: February 27, 2015 - 1:56 PM - Torrid
Plot Date: February 27, 2015 - 2:17 PM
Drawing Name: Z:\Projects\2015\15011 Carson City, NV Animal Services\15016 - P601 - Plumbing Schedules and General Notes.dwg

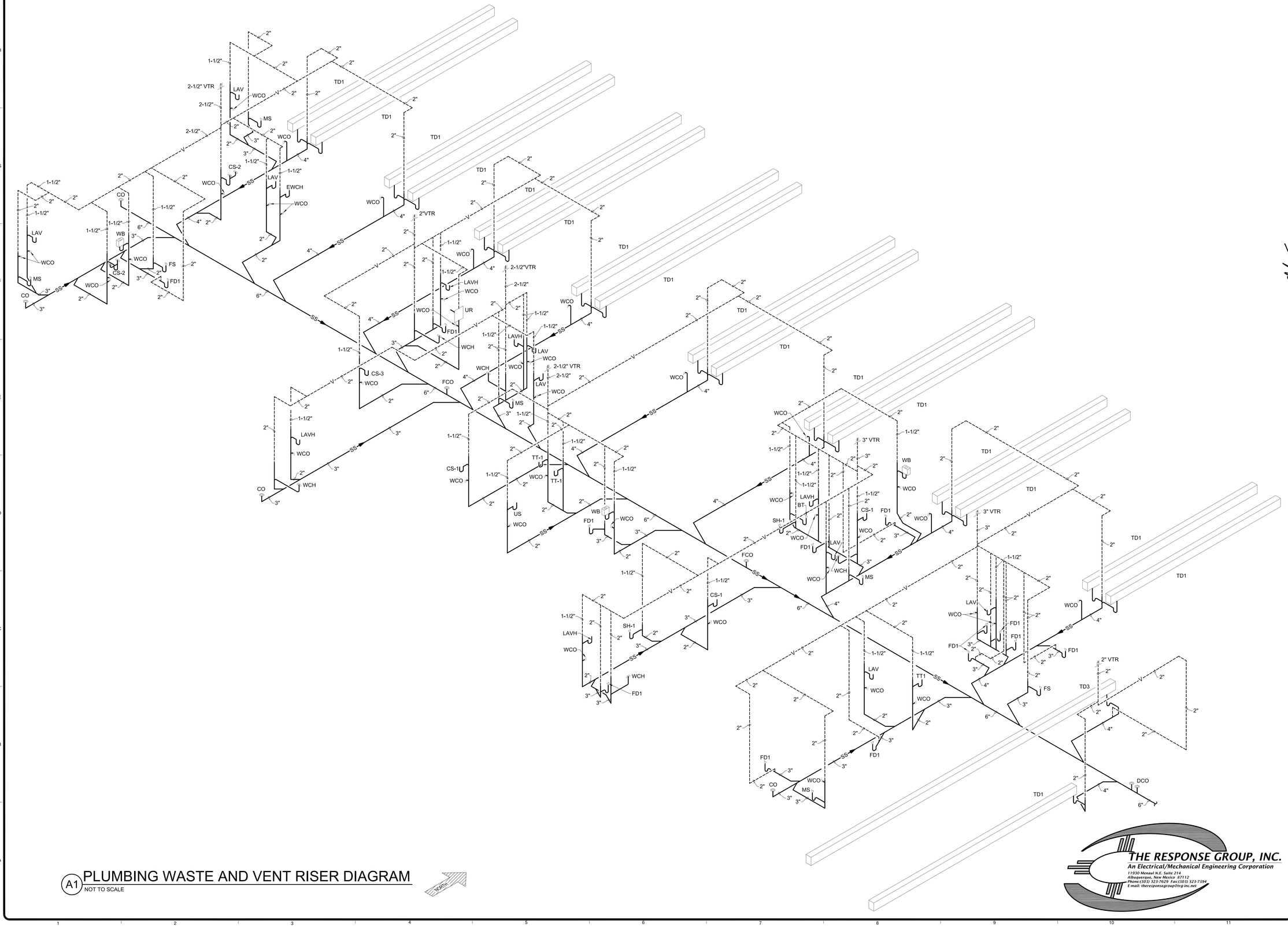

A1 PLUMBING WASTE AND VENT RISER DIAGRAM

NOT TO SCALE

NORTH

THE RESPONSE GROUP, INC.
An Electrical/Mechanical Engineering Corporation
11930 Menaul N.E. Suite 214
Albuquerque, New Mexico 87112
Phone:(505) 323-7629 Fax:(505) 323-7594
E-mail: theresponsegroup@trg-inc.net

901 Lamberton Pl. NE
Albuquerque, NM 87107
Phone: (505) 858-0180
Fax: (505) 858-0111
Email: info@bdaarc.com

The documents transmitted herein are the sole Intellectual Property of BDA Architecture, P.C. Any use, reuse, or reproduction in any form without the express written consent of, and compensation to, BDA Architecture is a violation of federal law.

BDA

PROFESSIONAL ENGINEER - STATE OF NEVADA
DAVID C. GRAHAM
Electrical
No. 015185
2/27/2015

15016 exp. 6/30/15

CARSON CITY ANIMAL SERVICES

549 Airport Road
Carson City, Nevada 89701
City of Carson City

Copyright, 2015, BDA ARCHITECTURE PC.

PLUMBING WASTE AND VENT RISER DIAGRAM

REV.#	DATE	COMMENTS
REVISION: -		
REVISION: -		
REVISION: -		
REVISION: -		

REVIEWS	
INITIALS	
	BDA DSGN. REV.
	BDA TECH REV.

CCAS

PROJECT NO.: 1107

DRAWN: .

DATE: 2/27/2015

P701

OF

Save Date: February 27, 2015 - 1:56 PM - Tomd
Plot Date: February 27, 2015 - 2:17 PM
Drawing Name: Z:\Projects\2015\15011\Carson City, NV Animal Services\15016 - P701 - Plumbing Waste and Vent Riser Diagram.dwg

KEYED NOTES CONTINUED

19. PROVIDE A ROOF OPENING APPROXIMATELY 2" LARGER ALL-SIDES OF SUPPLY DUCT, EXTEND DUCT AS SIZED ON PLAN DOWN THRU ROOF CURB AND CONNECT TO TOP OF 30"Lx30"Wx20"D SUPPLY AIR PLENUM. PROVIDE SIDEWALL SUPPLY REGISTERS AS SIZED ON PLAN ON ALL 4 SIDES OF SUPPLY PLENUM.

20. EXTEND EXHAUST DUCT TO EXTERIOR SOFFIT LOUVER (TYPE L1, DIMENSIONS AND FREE AREA AS INDICATED). PROVIDE ALL TRANSITIONS AS REQUIRED. INSTALL ABOVE DOG RUN ROOF. COORDINATE EXACT LOCATION AND INSTALLATION HEIGHT WITH ARCHITECT PRIOR TO INSTALLATION. WALL PENETRATION SHALL BE SEALED WEATHERTIGHT AS REQUIRED. REFER TO CEILING MOUNTED EXHAUST FAN W/SOFFIT GRILLE DETAIL.

21. EXTEND 4" DRYER VENT FROM CLOTHES DRYER STRAIGHT THRU EXTERIOR WALL TERNINATE WITH WALL CAP WITH BACKDRAFT DAMPER. VERIFY EXACT VENT SIZE REQUIRED WITH DRYER MANUFACTURER - EFFECTIVE VENT LENGTH SHALL NOT EXCEED LENGTH ALLOWED BY DRYER MANUFACTURER. VERIFY EXACT WALL CAP LOCATION WITH ARCHITECT PRIOR TO INSTALLATION. VENT AND WALL CAP SHALL BE INSTALLED PER DRYER MANUFACTURER'S REQUIREMENTS. PROVIDE ALL REQUIRED CLEARANCES TO COMBUSTIBLES. WALL PENETRATION SHALL BE SEALED WEATHERTIGHT AS REQUIRED. INSTALL DRYER VENT PER REQUIREMENTS OF THE UNIFORM MECHANICAL CODE. INSTALL PENETRATION ABOVE DOG RUN ROOF.

22. CONNECT 4" PVC INTAKE AND VENT PIPING TO DIRECT VENT CONDENSING WATER HEATER. ROUTE 4" PVC PIPING AS SHOWN TO GARAGE AND RISE THRU ROOF WITH CONCENTRIC VENT TERMINATION KIT PER MANUFACTURERS REQUIREMENTS. MAINTAIN 10'-0" FROM ANY MECHANICAL INTAKES. SEAL ROOF PENETRATION WEATHER TIGHT.

23. 8"Ø DRYER EXHAUST DUCT DOWN TO DRYER. CONNECT TO DRYER PER MANUFACTURERS REQUIREMENTS. CONTRACTOR SHALL PROVIDE HI/LO COMBUSTION DUCT PER MANUFACTURES. ROUTE DUCTWORK THRU ROOF OR THRU WALL FIELD COORDINATED.

24. PROVIDE MICROMETL ENERGY RECOVERY UNIT AND FACTORY ROOF CURB ASSEMBLY. INSTALL ENERGY RECOVERY UNIT PER MANUFACTURE'S REQUIREMENTS. INSTALL NEW END PANEL WITH EXHAUST SCOOP ONTO hvac UNITS COVERING RETURN CHAMBER. CAULK MATING FLANGES ON BOTH SIDES OF TRANSITION AND INSTALL BETWEEN HVAC UNIT AND ERV UNIT. SCREW IN PLACE. ERV UNIT MUST HAVE IT OWN DISCONNECT. REFER TO MECHANICAL DETAILS AND EQUIPMENT SCHEDULE FOR ADDITIONAL INFORMATION.

25. UNDER CUT DOOR 1" A.F.F.

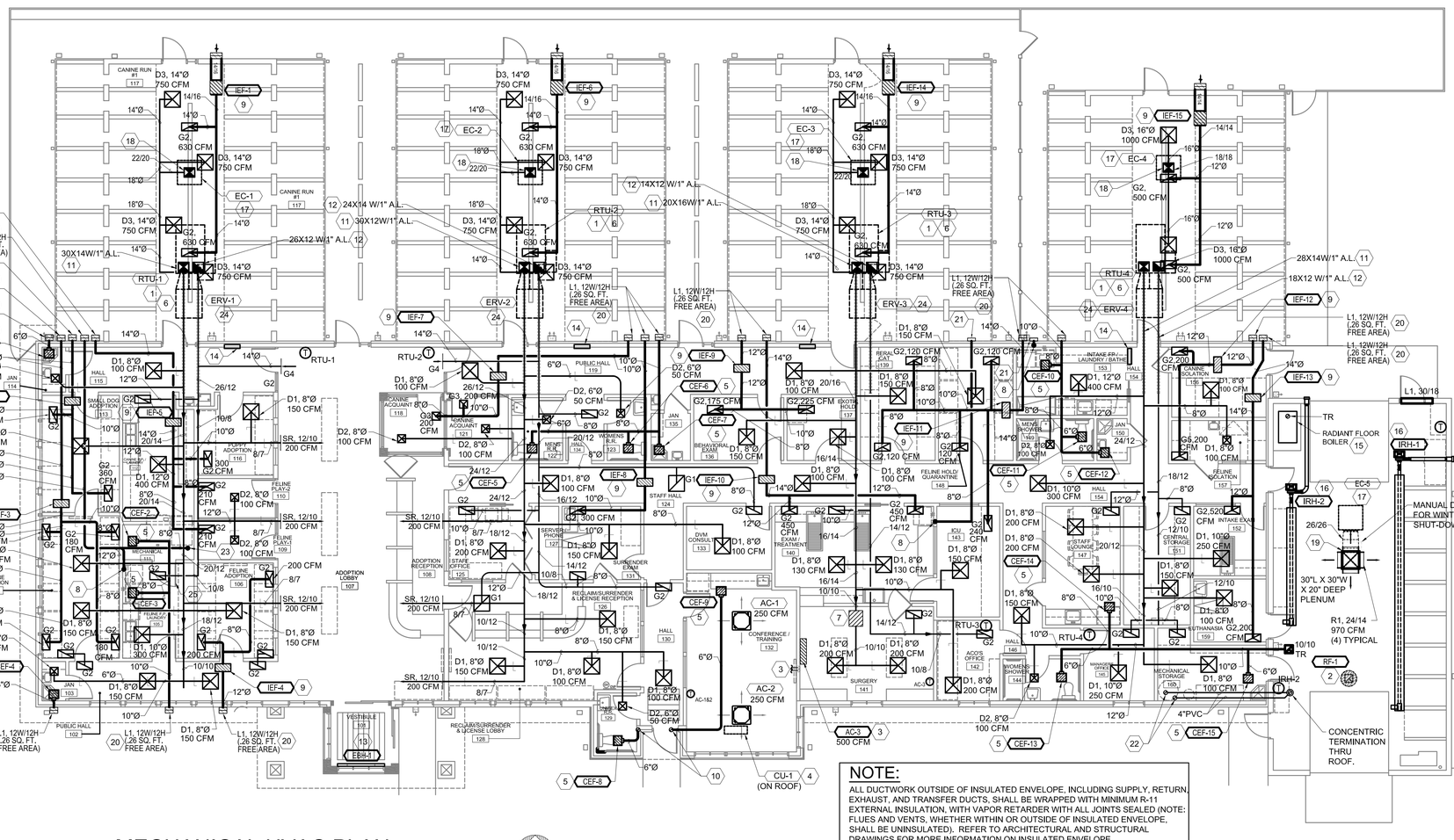

A1 MECHANICAL HVAC PLAN
1/8"=1'-0"

NOTE:

ALL DUCTWORK OUTSIDE OF INSULATED ENVELOPE, INCLUDING SUPPLY, RETURN, EXHAUST, AND TRANSFER DUCTS, SHALL BE WRAPPED WITH MINIMUM R-11 EXTERNAL INSULATION, WITH VAPOR RETARDER WITH ALL JOINTS SEALED (NOTE: FLUES AND VENTS, WHETHER WITHIN OR OUTSIDE OF INSULATED ENVELOPE, SHALL BE UNINSULATED). REFER TO ARCHITECTURAL AND STRUCTURAL DRAWINGS FOR MORE INFORMATION ON INSULATED ENVELOPE.

NOTE:

PROVIDE SEISMIC RESTRAINTS/SUPPORTS FOR ALL EQUIPMENT, DUCTWORK, PIPING, ETC., AS REQUIRED BY LOCAL AND STATE CODES

GENERAL NOTES

A. REFER TO SHEET M501 FOR MECHANICAL DETAILS.

B. REFER TO SHEET M601 AND M602 MECHANICAL SCHEDULES AND GENERAL NOTES.

KEYED NOTES

1. PROVIDE ROOFTOP UNIT AND FACTORY ROOF CURB. ENSURE CURB IS INSTALLED LEVEL FOR PROPER CONDENSATE DRAINAGE FROM UNIT. PROVIDE FLEXIBLE CONNECTORS ON THE SUPPLY AND RETURN AIR DUCT CONNECTIONS AND TRANSITION TO DUCT SIZES SHOWN. EXTEND DUCTS THRU ROOF. COORDINATE WITH STRUCTURE. REFER TO MECHANICAL DETAILS AND EQUIPMENT SCHEDULE FOR ADDITIONAL INFORMATION.

2. PROVIDE ROOF MOUNTED EXHAUST FAN AND ROOF CURB. PROVIDE DUCT TRANSITION FROM FAN OPENING TO DUCT SIZE SHOWN, TRANSITION IN ROOF CURB. EXTEND DUCT DOWN THRU ROOF. COORDINATE WITH STRUCTURE. REFER TO DETAIL AND EQUIPMENT SCHEDULE FOR ADDITIONAL INFORMATION.

3. PROVIDE DUCTLESS SPLIT COOLING UNIT. INSTALL UNIT LEVEL ON WALL FOR PROPER CONDENSATE DRAINAGE. COORDINATE WITH ROOM EQUIPMENT AND CONDITIONS. UNIT CONDENSATE LINE SIZED PER MANUFACTURER, PUMPED TO ABOVE CEILING, DROPPING DOWN IN CORNER OF JANITOR'S CLOSET AND TERMINATING TO DRAIN INTO MOP SINK. TERMINATE DRAIN MINIMUM OF 1" ABOVE LIP OF MOP SINK. ROUTE DRAIN IN COPPER PIPING PROPERLY SECURED TO WALL. COORDINATE WITH PLUMBING CONTRACTOR. PROVIDE LIQUID AND VAPOR PIPING. SIZE PIPING, TRAP, AND SLOPE REFRIGERANT LINES PER MAUNFACTURER'S INSTRUCTIONS. CONTRACTOR TO COORDINATE SHORTEST ROUTING TO ASSOCIATED REMOTE CONDENSING UNIT. PROVIDE ALL VALVES AND ACCESSORIES FOR A COMPLETE AND OPERATIONAL SYSTEM. REFER TO EQUIPMENT SCHEDULE FOR ADDITIONAL INFORMATION.

4. PROVIDE REMOTE CONDENSING UNIT AND EQUIPMENT SUPPORT RAILS ON ROOF. INSTALL UNIT LEVEL. PROVIDE LIQUID AND VAPOR PIPING. SIZE PIPING, SUPPORT, TRAP, AND SLOPE REFRIGERANT LINES PER MANUFACTURER'S INSTRUCTIONS. PROVIDE INSULATION WITH UV PROTECTANT ON VAPOR LINE. EXTEND REFRIGERANT PIPING THRU ROOF THRU PORTALS PLUS "ALUM-FLASH" BASE WITH CAP. SEAL ROOF PENETRATION WEATHERTIGHT. CONTRACTOR TO COORDINATE SHORTEST ROUTING TO FAN COIL UNIT BELOW. PROVIDE CONTROL WIRING BETWEEN CONDENSING UNIT AND FAN COIL UNIT AND ALL CONTROL COMPONENTS. PROVIDE ALL VALVES AND ACCESSORIES AS REQUIRED BY MANUFACTURER FOR A COMPLETE AND OPERATIONAL SYSTEM. INSTALL CONDENSING UNIT MAINTAINING MANUFACTURER'S REQUIRED CLEARANCES.

5. PROVIDE CEILING MOUNTED EXHAUST FAN. SUPPORT FAN FROM STRUCTURE WITH 1" X 18 GAUGE GALVANIZED SHEET METAL SUPPORT STRAPS. INSTALL STRAPS AT FAN CORNERS AND PERPENDICULAR TO STRUCTURE. CEILING FAN INTALLED IN A LAY-IN TYPE CEILING SHALL BE CENTERED IN TILE AND SUPPORTED FROM STRUCTURE. TRANSITION FROM FAN DISCHARGE TO DUCT SIZE SHOWN AND EXTEND UP THRU WALL. COORDINATE WITH STRUCTURE. PROVIDE A STORM COLLAR, AND ALL-WEATHER CAP. INTERLOCK OPERATION OF EXHAUST FAN PER NOTES ON EQUIPMENT SCHEDULE. REFER TO DETAILS AND EQUIPMENT SCHEDULE FOR ADDITIONAL INFORMATION.

6. INSTALL PETAIRAPY PPR-360 DOUBLE LAMP SYSTEM IN UNIT (DESIGNED TO DISINFECT AIR AND SURFACE) AND PPC-16 (ODOR CONTROL TIO2 MESH TUBE-12PCS), SAFETY SWITCH, VIEWPORT. CONTRACTOR SHALL COORDINATE EXACT LOCATION AND INSTALLATION WITH PETAIRAPY INSTRUCTION. PPR-UNITS MUST BE PLACED ON THE SUPPLY SIDE OF THE COOLING COIL.

7. FILTER ASSEMBLY EQUAL TO FARR 3P GLIDE/PACK FILTER RACK WITH 12" DEEP, 95% RIGA-FLO 200 FILTER, 24" WIDE, 12" HIGH, 200 FPM FACE VELOCITY AT 650 CFM, 0.25" INITIAL PRESSURE DROP, 0.75" FINAL PRESSURE DROP. PROVIDE ALL DUCT TRANSITIONS AT INLET AND OUTLET OF FILTER ASSEMBLY AS REQUIRED.

8. PROVIDE DRYER VENT ENCLOSURE (DRYERBOX MODEL 425) IN WALL AS REQUIRED TO ALLOW SHORT RADIUS VENT CONNECTION TO CLOTHES DRYER. COORDINATE EXACT MOUNTING HEIGHT REQUIRED WITH DRYER VENT OUTLET.

9. PROVIDE IN-LINE EXHAUST FAN. SUPPORT FAN FROM STRUCTURE WITH 3/8" ROD AND SPRING ISO PER DETAIL. IN-LINE FAN INTALLED IN A CEILING SPACE AND SUPPORTED FROM STRUCTURE. TRANSITION FROM FAN DISCHARGE TO DUCT SIZE SHOWN AND EXTEND THRU WALL. COORDINATE WITH STRUCTURE. PROVIDE A STORM COLLAR, AND ALL-WEATHER CAP. INTERLOCK OPERATION OF EXHAUST FAN PER NOTES ON EQUIPMENT SCHEDULE. REFER TO DETAILS AND EQUIPMENT SCHEDULE FOR ADDITIONAL INFORMATION.

10. EXTEND EXHAUST DUCT OF SIZE INDICATED UP THROUGH ROOF AND TERMINATE WITH ROOF CAP PER MANUFACTURES REQUIREMENTS. PROVIDE ALL TRANSITIONS AS REQUIRED. SEAL ROOF PENETRATION WEATHER TIGHT.

11. EXTEND ACOUSTICALLY LINED SUPPLY DUCT OF SIZE INDICATED UP THROUGH ROOF AND CONNECT TO ROOFTOP UNIT. PROVIDE ALL TRANSITIONS AS REQUIRED. COORDINATE ROUTING WITH STRUCTURAL.

12. EXTEND RETURN DUCT OF SIZE INDICATED UP THROUGH ROOF AND CONNECT TO ROOFTOP UNIT. PROVIDE ALL TRANSITIONS AS REQUIRED. COORDINATE ROUTING WITH STRUCTURAL.

13. INSTALL FLOOR MOUNTED BASE BOARD HEATER PER MANUFACTURERS REQUIREMENTS. COORDINATE WITH ELECTRICAL.

14. CANINE RUN RADIANT FLOOR HEATING MANIFOLD. INSTALL ON WALL PER MANUFACTURERS REQUIREMENTS. MAKE ALL REQUIRED PIPING AND POWER CONNECTIONS PER MANUFACTURERS REQUIREMENTS. COORDINATE WITH OWNER FOR COMPLETE DESIGN SPECIFICATION.

15. RADIANT FLOOR SUPPLY BOILER AND PUMP SPECIFIED BY OWNER. INSTALL ON 4" THICK CONCRETE HOUSEKEEPING PAD. PAD SHALL EXTEND 6" FROM EACH SIDE OF BOILER. ROUTE LINE SIZE EXHAUST FLUE UP THRU ROOF AND TERMINATE PER MANUFACTURERS REQUIREMENTS. MAINTAIN A DISTANCE OF 10'-0" FROM ANY MECHANICAL INTAKE. MAKE ALL REQUIRED PIPING, DUCT AND POWER CONNECTIONS PER MANUFACTURERS REQUIREMENTS. COORDINATE WITH OWNER FOR COMPLETE DESIGN SPECIFICATION.

16. INSTALL INFRARED TUBE HEATER PER CODE AND MANUFACTURERS REQUIREMENTS. COORDINATE MINIMUM MOUNTING HEIGHTS AND MOUNT AS HIGH AS POSSIBLE. MAINTAIN CLEARANCES TO COMBUSTIBLES. ROUTE DIRECT VENT TO EXTERIOR OF BUILDING AND PROVIDE WITH TERMINATION WALL KIT PER MANUFACTURERS REQUIREMENTS.

17. PROVIDE AN EVAPORATIVE COOLER. INSTALL EVAPORATIVE COOLER ON EQUIPMENT SUPPORT STAND. PROVIDE FLEXIBLE CONNECTOR ON COOLER DISCHARGE DUCT CONNECTION AND TRANSITION TO DUCT SIZE SHOWN. EXTEND DUCT THRU ROOF. PROVIDE DUCT THRU ROOF CURB FOR ROOF PENETRATION. COORDINATE WITH STRUCTURE. FOR EVAP COOLER (EC-5) SUPPORT DUCTWORK ON ROOF AND PROVIDE A MANUAL LOCKING QUADRANT TYPE "WINTER" SHUT-OFF DAMPER IN DUCT ON ROOF. PROVIDE SHEET METAL SUN GUARD OVER FLEX CONNECTOR. REFER TO DETAILS AND EQUIPMENT SCHEDULE FOR ADDITIONAL INFORMATION.

18. PROVIDE A ROOF OPENING APPROXIMATELY 2" LARGER ALL-SIDES OF SUPPLY DUCT, EXTEND DUCT AS SIZED ON PLAN DOWN THRU ROOF CURB AND ROUTE AS SHOWN. .

901 Lamberton Pl. NE
Albuquerque, NM 87107
Phone: (505) 858-0180
Fax: (505) 858-0111
Email: info@bdaarc.com

The documents transmitted herein are the sole Intellectual Property of BDA Architecture, P.C. Any use, reuse, or reproduction in any form without the express written consent of, and compensation to, BDA Architecture is a violation of federal law.

BDA

STATE OF NEVADA PROFESSIONAL ENGINEER DAVID C. GRAHAM 9/29/2015 NO. 018498 MECHANICAL
15016 9/29/15

CARSON CITY ANIMAL SERVICES

549 Airport Road
Carson City, Nevada 89701
City of Carson City

Copyright, 2015, BDA ARCHITECTURE PC.

MECHANICAL HVAC PLAN

REVISION:	REV.#	DATE	COMMENTS
REVISION:	-		
REVISION:	-		
REVISION:	-		
REVISION:	-		

REVIEWS	
INITIALS	
	BDA DSGN. REV.
	BDA TECH REV.

CCAS

PROJECT NO.: 1107

DRAWN: MAR/KP

DATE: 2/27/2015

M101

OF

THE RESPONSE GROUP, INC.
An Electrical/Mechanical Engineering Corporation
11930 Menaul N.E. Suite 214
Albuquerque, New Mexico 87112
Phone:(505) 323-7629 Fax:(505) 323-7594
E-mail: theresponsegroup@trg-inc.net

Save Date: March 2, 2015 - 11:59 AM - ORomero
Plot Date: March 2, 2015 - 12:28 PM
Drawing Name: Z:\Projects\2015\11501 Carson City, NV Animal Services\3-2-15\cur\15016 - M101 - Mechanical Plan (mlpurl)_recover.dwg

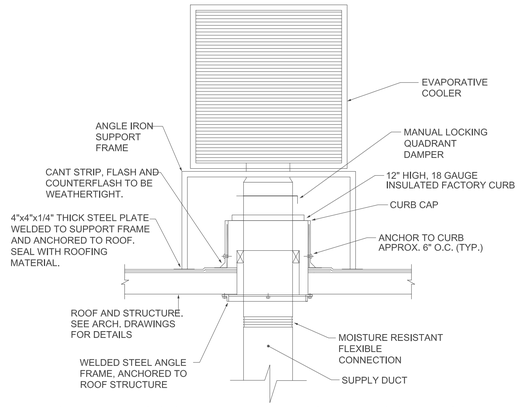

EVAPORATIVE COOLER DETAIL-DOWN DISCHARGE

NO SCALE

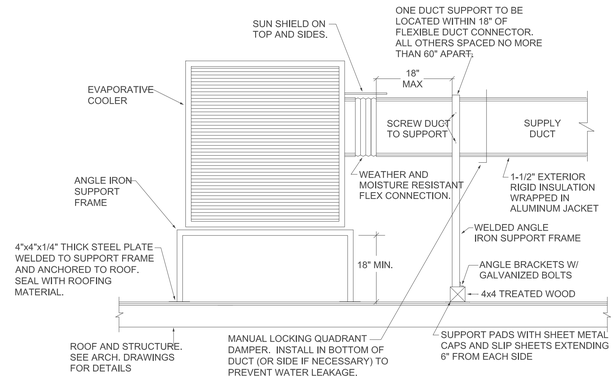

EVAPORATIVE COOLER DETAIL - SIDE DISCHARGE

NO SCALE

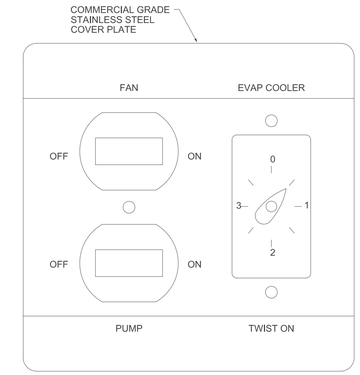

SWITCH PLATE COVER SHALL BE ENGRAVED USING DIAMOND DRAG WITH BLOCK FONT. LETTERS SHALL BE 1/8" HIGH MINIMUM AND SHALL BE FILLED WITH BLACK EPOXY ENAMEL PAINT. CONTACT EXPERIENCED TROPHY SHOP FOR ENGRAVING.

EVAPORATIVE COOLER SWITCH PLATE

NO SCALE

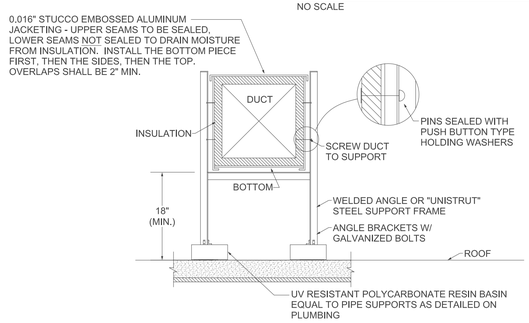

DUCT SUPPORT ON ROOF DETAIL

NO SCALE

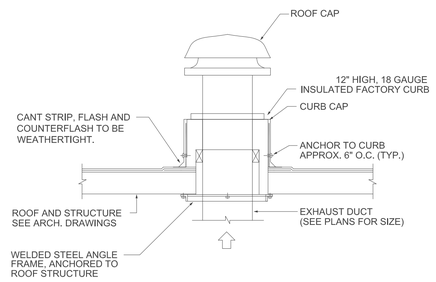

ROOF CAP DETAIL

NO SCALE

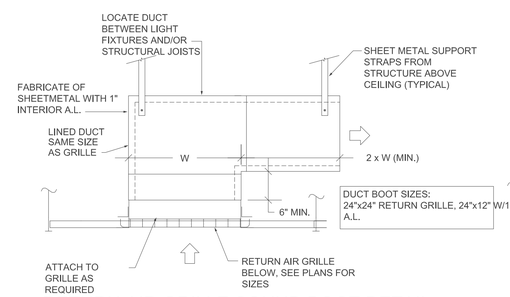

RETURN AIR GRILLE SOUND BOOT DETAIL

NO SCALE

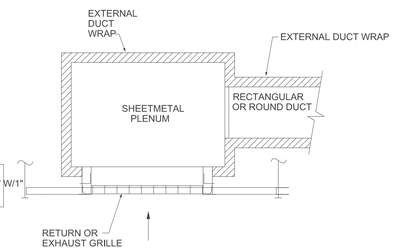

RETURN OR EXHAUST GRILLE DETAIL

NO SCALE

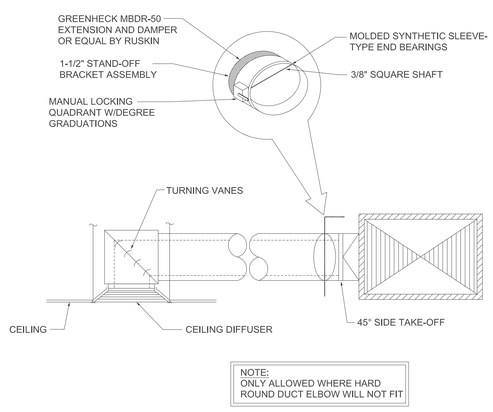

CEILING DIFFUSER DETAIL

NO SCALE

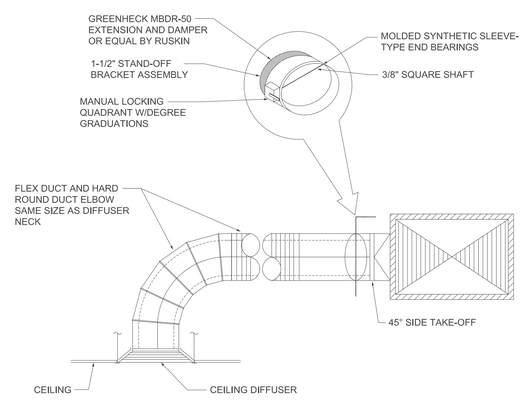

CEILING DIFFUSER DETAIL

NO SCALE

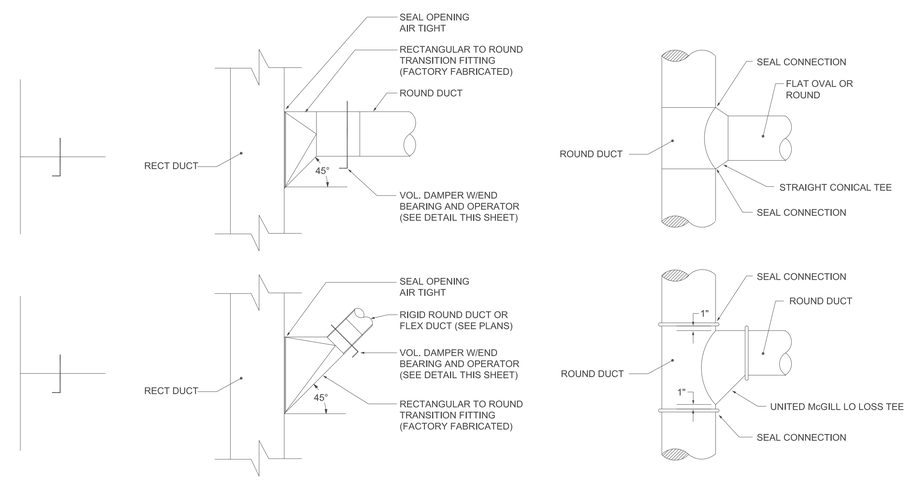

DUCT TAKE-OFFS DETAIL

NO SCALE

NOTE: 45° CONNECTIONS SHALL BE IN DIRECTION OF AIRFLOW

THE RESPONSE GROUP, INC.
An Electrical/Mechanical Engineering Corporation
11930 Menaul N.E. Suite 214
Albuquerque, New Mexico 87112
Phone:(505) 323-7629 Fax:(505) 323-7594
E-mail: therespomsegroup@trg-inc.net

901 Lamberton Pl. NE
Albuquerque, NM 87107
Phone: (505) 858-0180
Fax: (505) 858-0111
Email: info@bdaarc.com

The documents transmitted herein are the sole Intellectual Property of BDA Architecture, P.C. Any use, reuse, or reproduction in any form without the express written consent of, and compensation to, BDA Architecture is a violation of federal law.

BDA

STATE OF NEVADA PROFESSIONAL ENGINEER DAVID C. GRAHAM No. 18498 MECHANICAL 9/9/2015

15016 BDA 6/30/16

CARSON CITY ANIMAL SERVICES

549 Airport Road
Carson City, Nevada 89701
City of Carson City

Copyright, 2015, BDA ARCHITECTURE PC.

MECHANICAL DETAILS

REV.#	DATE	COMMENTS
REVISION: -		
REVISION: -		
REVISION: -		
REVISION: -		

REVIEWS	
INITIALS	
	BDA DSGN. REV.
	BDA TECH REV.

CCAS

PROJECT NO.: 1107
DRAWN: -
DATE: 2/27/2015

M501

OF

Save Date: March 2, 2015 - 11:59 AM - Miguel
Plot Date: March 2, 2015 - 12:30 PM
Drawing Name: Z:\Projects\2015\1150111 Carson City, NV Animal Services\3-2-15\cset15016 - M501 - Mechanical Details.dwg

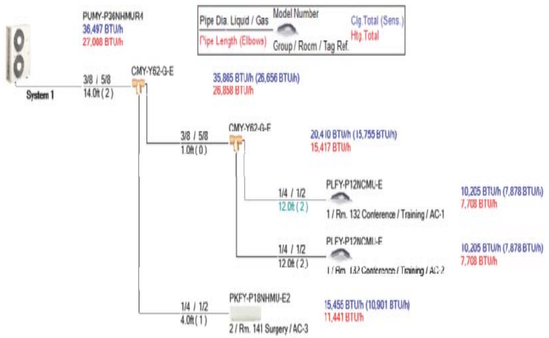

CONDENSING UNIT PIPING SCHEMATIC

NO SCALE

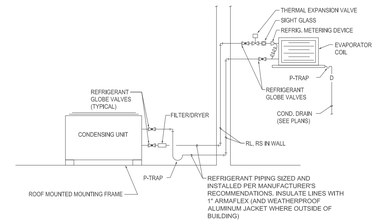

CONDENSING UNIT PIPING DETAIL

NO SCALE

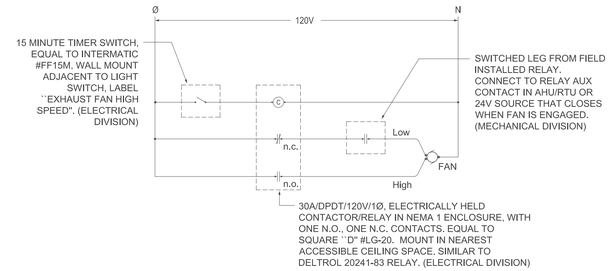

2-SPEED EXHAUST FAN CONTROL DIAGRAM

NO SCALE

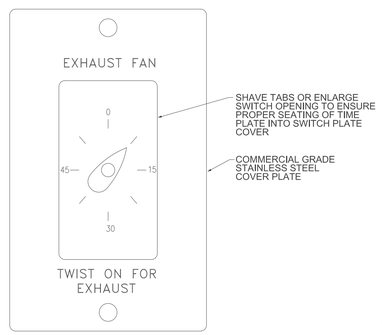

SWITCH PLATE COVER SHALL BE ENGRAVED USING DIAMOND DRAG WITH BLOCK FONT. LETTERS SHALL BE 1/8" HIGH MINIMUM AND SHALL BE FILLED WITH BLACK EPOXY ENAMEL PAINT CONTACT ANY EXPERIENCE TROPHY SHOP FOR ENGRAVING.

EXHAUST FAN SWITCH PLATE DETAIL

NO SCALE

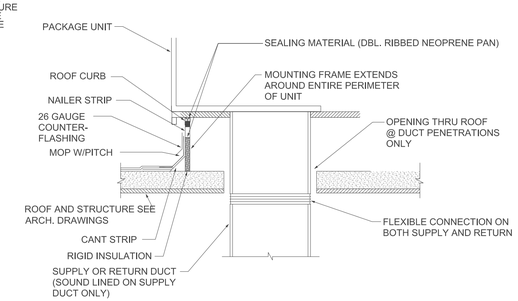

ROOFTOP UNIT DETAIL - VERTICAL DUCTING

NO SCALE

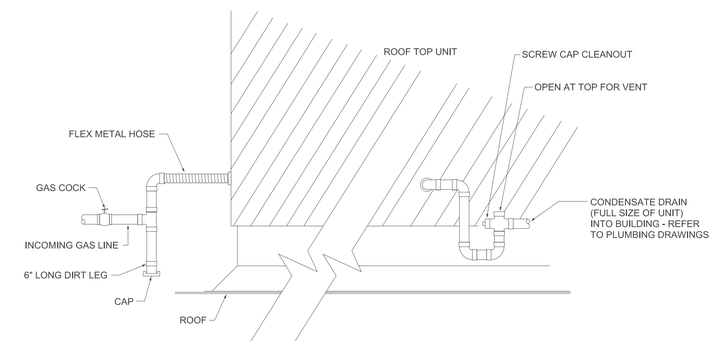

ROOFTOP UNIT PIPING DETAIL (TYPICAL ALL UNITS)

NO SCALE

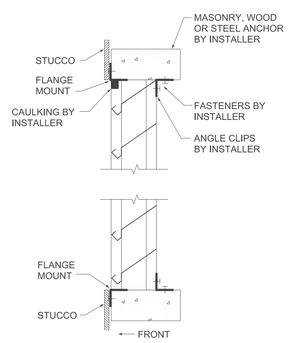

EXTRUDED ALUMINUM LOUVER

NO SCALE

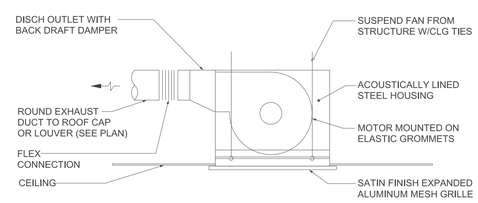

CEILING MOUNTED EXHAUST FAN DETAIL

NO SCALE

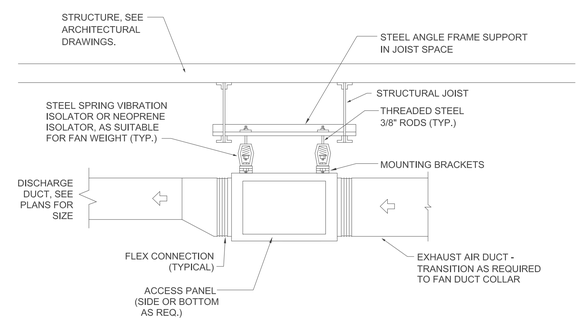

IN-LINE EXHAUST FAN DETAIL

NO SCALE

901 Lamberton Pl. NE
Albuquerque, NM 87107
Phone: (505) 858-0180
Fax: (505) 858-0111
Email: info@bdaarc.com

The documents transmitted herein are the sole Intellectual Property of BDA Architecture, P.C. Any use, reuse, or reproduction in any form without the express written consent of, and compensation to, BDA Architecture is a violation of federal law.

BDA

PROFESSIONAL ENGINEER - STATE OF NEVADA
DAVID C. GRAHAM
9/2/2015
MECHANICAL
No. 9148
6/30/16

15016

CARSON CITY ANIMAL SERVICES

549 Airport Road
Carson City, Nevada 89701
City of Carson City

Copyright, 2015, BDA ARCHITECTURE PC.

MECHANICAL DETAILS

REV.#	DATE	COMMENTS
REVISION: -		
REVISION: -		
REVISION: -		
REVISION: -		

REVIEWS	
INITIALS	
	BDA DSGN. REV.
	BDA TECH REV.

CCAS

PROJECT NO.: 1107

DRAWN: .

DATE: 2/27/2015

M502

OF

THE RESPONSE GROUP, INC.
An Electrical/Mechanical Engineering Corporation
11930 Menaul N.E. Suite 214
Albuquerque, New Mexico 87112
Phone:(505) 323-7629 Fax:(505) 323-7594
Email: theresponsegroup@trg-inc.net

Save Date: March 2, 2015 - 11:59 AM - ORomero
Plot Date: March 2, 2015 - 12:22 PM
Drawing Name: Z:\Projects\2015\15011 Carson City, NV Animal Services\3-2-15\proj\15016 - M501 - Mechanical Details.dwg

EXHAUST FAN SCHEDULE

MARK	SERVICE/ MOUNTING	CFM HI/LOW	EXT. SP.	FRPM (RPM)	WATTS/HP	VOLTS/ PHASE	SONES	DRIVE	MANUFACTURER AND MODEL #	1 OR 2 SPEED	AC UNIT ZONE
CEF-1	JAN 114 CEILING	80	0.25"	618	48	115V/1	1.0	DIRECT	GREENHECK SP-A200	1	RTU-1
CEF-2	MECHANICAL 111 CEILING	150	0.25"	772	81	115V/1	0.9	DIRECT	GREENHECK SP-A290	1	RTU-1
CEF-3	FELINE FP LAUNDRY 105 CEILING	200	0.25"	772	81	115V/1	0.9	DIRECT	GREENHECK SP-A290	1	RTU-1
CEF-4	JAN 103 CEILING	80	0.25"	618	48	115V/1	1.0	DIRECT	GREENHECK SP-A200	1	RTU-1
CEF-5	MENS RR 122 CEILING	80	0.25"	618	48	115V/1	1.0	DIRECT	GREENHECK SP-A200	1	RTU-2
CEF-6	WOMENS RR 123 CEILING	80	0.25"	618	48	115V/1	1.0	DIRECT	GREENHECK SP-A200	1	RTU-2
CEF-7	JAN 135 CEILING	80	0.25"	618	48	115V/1	1.0	DIRECT	GREENHECK SP-A200	1	RTU-2
CEF-8	UNISEX RR 129 CEILING	80	0.25"	618	48	115V/1	1.0	DIRECT	GREENHECK SP-A200	1	RTU-2
CEF-9	CONFERENCE/TRAINING 132 CEILING	150	0.25"	772	81	115V/1	0.9	DIRECT	GREENHECK SP-A290	1	RTU-2
CEF-10	INTAKE FP LAUNDRY/BATHE 153 CEILING	200	0.25"	772	81	115V/1	0.9	DIRECT	GREENHECK SP-A290	1	RTU-4
CEF-11	MENS SHOWER 149 CEILING	80	0.25"	618	48	115V/1	1.0	DIRECT	GREENHECK SP-A200	1	RTU-4
CEF-12	JAN 150 CEILING	80	0.25"	618	48	115V/1	1.0	DIRECT	GREENHECK SP-A200	1	RTU-4
CEF-13	WOMENS SHOWER 144 CEILING	80	0.25"	618	48	115V/1	1.0	DIRECT	GREENHECK SP-A200	1	RTU-4
CEF-14	STAFF LOUNGE 147 CEILING	150	0.25"	772	81	115V/1	0.9	DIRECT	GREENHECK SP-A290	1	RTU-4
CEF-15	MECHANICAL STORAGE 160 CEILING	150	0.25"	772	81	115V/1	0.9	DIRECT	GREENHECK SP-A290	1	RTU-4
IEF-1	CANINE RUN 1 RM 117 INLINE-CEILING SPACE	650/1260	0.375"	FACTORY DETERMINED	1/2 HP	115V/1	6.7	DIRECT	GREENHECK SQ-120-VG	2	EC-1
IEF-2	SMALL DOG ADOPTION RM 104 INLINE-CEILING SPACE	390/720	0.35"	FACTORY DETERMINED	1/4 HP	115V/1	6.2	DIRECT	GREENHECK SQ-95-VG	2	RTU-1
IEF-3	FELINE ADOPTION 104 INLINE-CEILING SPACE	390/720	0.35"	FACTORY DETERMINED	1/4 HP	115V/1	6.2	DIRECT	GREENHECK SQ-95-VG	2	RTU-1
IEF-4	FELINE ADOPTION 106 INLINE-CEILING SPACE	250/400	0.35"	FACTORY DETERMINED	1/6 HP	115V/1	7.5	DIRECT	GREENHECK SQ-90-VG	2	RTU-1
IEF-5	PUPPY ADOPTION 116/FELINE PLAY 109 & 110 INLINE-CEILING SPACE	450/720	0.35"	FACTORY DETERMINED	1/4 HP	115V/1	6.2	DIRECT	GREENHECK SQ-95-VG	2	RTU-1
IEF-6	CANINE RUN 2 RM 120 INLINE-CEILING SPACE	650/1260	0.375"	FACTORY DETERMINED	1/2 HP	115V/1	6.7	DIRECT	GREENHECK SQ-120-VG	2	EC-2
IEF-7	CANINE ACQUAINT 118 & 121 INLINE-CEILING SPACE	250/400	0.35"	FACTORY DETERMINED	1/6 HP	115V/1	7.5	DIRECT	GREENHECK SQ-90-VG	2	RTU-2
IEF-8	SURRENDER EXAM 131 INLINE-CEILING SPACE	300	0.25"	FACTORY DETERMINED	1/6 HP	115V/1	1.5	DIRECT	GREENHECK SQ-75-VG	2	RTU-2
IEF-9	BEHAVIORAL EXAM 136/EXOTIC HOLD 137 INLINE-CEILING SPACE	290/400	0.35"	FACTORY DETERMINED	1/6 HP	115V/1	7.5	DIRECT	GREENHECK SQ-90-VG	2	RTU-2
IEF-10	EXAM TREATMENT 140/ICU 143 INLINE-CEILING SPACE	550/900	0..375"	FACTORY DETERMINED	1/2 HP	115V/1	6.7	DIRECT	GREENHECK SQ-120-VG	2	RTU-3
IEF-11	FERAL CAT 139/FELINE HOLD QUARANTINE 148 INLINE-CEILING SPACE	450/720	0.35"	FACTORY DETERMINED	1/4 HP	115V/1	6.2	DIRECT	GREENHECK SQ-95-VG	2	RTU-3
IEF-12	CANINE ISOLATIO 156/FELINE ISOLATION 157 INLINE-CEILING SPACE	300/400	0.35"	FACTORY DETERMINED	1/6 HP	115V/1	7.5	DIRECT	GREENHECK SQ-90-VG	2	RTU-4
IEF-13	INTAKE EXAM 152/EUTHANASIA 160 INLINE-CEILING SPACE	450/720	0.35"	FACTORY DETERMINED	1/4 HP	115V/1	6.2	DIRECT	GREENHECK SQ-95-VG	2	RTU-4
IEF-14	CANINE RUN 3 RM 138 INLINE-CEILING SPACE	650/1260	0.375"	FACTORY DETERMINED	1/2 HP	115V/1	6.7	DIRECT	GREENHECK SQ-120-VG	2	EC-3
IEF-15	CANINE HOLD QUARANTINE 155 INLINE-CEILING SPACE	650/1260	0.375"	FACTORY DETERMINED	1/2 HP	115V/1	6.7	DIRECT	GREENHECK SQ-120-VG	2	EC-4
RF-1	INTAKE GARAGE CENTRIFUGAL EXHAUST	4000	0.5"	1725 RPM	1.5 HP	208V/1	11	BELT	GREENHECK GB-200-15	1	EC-5

NOTES:
1. SUPPORT ALL FANS FROM STRUCTURE AND PROVIDE VIBRATION ISOLATION.
2. PROVIDE ALL FANS WITH BACKDRAFT DAMPERS.
3. PROVIDE EACH DIRECT DRIVE FAN WITH A SOLID-STATE SPEED CONTROLLER MOUNTED ON FAN HOUSING OR WITH VARI-GREEN TYPE ECM MOTOR (DESIGNATED VG)
4. PROVIDE ALL INLINE FANS WITH INTERNAL SOUND ABSORBING INSULATED HOUSINGS (1/2" THICK).
5. PROVIDE ALL SERVICE AND OPERATIONAL CLEARANCES AS REQUIRED, INCLUDING ALL CLEARANCES REQUIRED BY NEC ARTICLE 110. ALL FANS SHALL BE INSTALLED IN ACCESSIBLE LOCATIONS.
6. PROVIDE ROOF MOUNTED EXHAUST FAN (RF-1) WITH FACTORY ROOF CURB, BIRD SCREEN AND HORIZONTAL MOUNT EXHAUST DAMPER(WD-100)

SEQUENCE OF OPERATION:

CEF-1: INTERLOCK WITH WALL SWITCH
CEF-2: INTERLOCK WITH WALL SWITCH
CEF-3: INTERLOCK WITH WALL SWITCH
CEF-4: INTERLOCK WITH WALL SWITCH
CEF-5: INTERLOCK WITH LIGHT SWITCH
CEF-6: INTERLOCK WITH LIGHT SWITCH
CEF-7: INTERLOCK WITH WALL SWITCH
CEF-8: INTERLOCK WITH LIGHT SWITCH
CEF-9: INTERLOCK WITH 15 MINUTE TWIST TIMER.
CEF-10: INTERLOCK WITH WALL SWITCH
CEF-11: INTERLOCK WITH LIGHT SWITCH
CEF-12: INTERLOCK WITH WALL SWITCH
CEF-13: INTERLOCK WITH LIGHT SWITCH
CEF-14: INTERLOCK WITH WALL SWITCH
CEF-15: INTERLOCK WITH WALL SWITCH
IEF-1: INTERLOCK LOW SPEED WITH RADIANT BOILER SYSTEM/ 15 MINUTE TWIST TIMER HIGH SPEED
IEF-2: INTERLOCK LOW SPEED WITH (RTU-1)/ 15 MINUTE TWIST TIMER HIGH SPEED
IEF-3: INTERLOCK LOW SPEED WITH (RTU-1)/ 15 MINUTE TWIST TIMER HIGH SPEED
IEF-4: INTERLOCK LOW SPEED WITH (RTU-1)/ 15 MINUTE TWIST TIMER HIGH SPEED
IEF-5: INTERLOCK LOW SPEED WITH (RTU-1)/ 15 MINUTE TWIST TIMER HIGH SPEED
IEF-6: INTERLOCK LOW SPEED WITH RADIANT BOILER SYSTEM/ 15 MINUTE TWIST TIMER HIGH SPEED
IEF-7: INTERLOCK LOW SPEED WITH (RTU-2)/ 15 MINUTE TWIST TIMER HIGH SPEED
IEF-8: INTERLOCK WITH 15 MINUTE TWIST TIMER.
IEF-9: INTERLOCK LOW SPEED WITH (RTU-2)/ 15 MINUTE TWIST TIMER HIGH SPEED
IEF-10: INTERLOCK LOW SPEED WITH (RTU-3)/ 15 MINUTE TWIST TIMER HIGH SPEED
IEF-11: INTERLOCK LOW SPEED WITH (RTU-3)/ 15 MINUTE TWIST TIMER HIGH SPEED
IEF-12: INTERLOCK LOW SPEED WITH (RTU-4)/ 15 MINUTE TWIST TIMER HIGH SPEED
IEF-13: INTERLOCK LOW SPEED WITH (RTU-4)/ 15 MINUTE TWIST TIMER HIGH SPEED
IEF-14: INTERLOCK LOW SPEED WITH RADIANT BOILER SYSTEM/ 15 MINUTE TWIST TIMER HIGH SPEED
IEF-15: INTERLOCK LOW SPEED WITH RADIANT BOILER SYSTEM/ 15 MINUTE TWIST TIMER HIGH SPEED
RF-1: INTERLOCK WITH EC-5/ 15 MINUTE TWIST TIMER OVERRIDE

ELECTRICAL DIVISION SHALL PROVIDE ALL SWITCHES AND TWIST TIMERS. ELECTRICAL DIVISION SHALL BE RESPONSIBLE FOR ALL INTERLOCKS WITH LIGHT SWITCHES, TWIST TIMERS, AND WALL SWITCHES. REFER TO ELECTRICAL DRAWINGS.
MECHANICAL DIVISION SHALL BE RESPONSIBLE FOR ALL INTERLOCKS WITH AC UNITS. PROVIDE LOW VOLTAGE CONTROL RELAYS AS REQUIRED.
ALL EXHAUST FANS INTERLOCKED WITH AC UNITS SHALL SHUT OFF WHEN AC UNIT INDOOR FAN SHUTS OFF.

MECHANICAL SYMBOL LEGEND

SYMBOL	DESCRIPTION
	NEW SUPPLY/RETURN/EXHAUST CEILING GRILLE
	NEW SUPPLY/RETURN FLOOR GRILLE
	NEW SIDEWALL SUPPLY GRILLE
D1, 8"Ø 200 CFM	DIFFUSER TYPE, NECK SIZE, AND CFM
	DIFFUSER THROW PATTERN (4-WAY THROW IF NO PATTERN SHOWN)
	CEILING-MOUNTED ACCESS DOOR
	SUPPLY/RETURN/EXHAUST DUCTWORK RISER UP
	SUPPLY/RETURN/EXHAUST DUCTWORK RISER DOWN
	NEW SUPPLY/RETURN/EXHAUST DUCT
	NEW DUCT WITH ACOUSTICAL LINING
1	KEYED NOTE SYMBOL DESIGNATION
RTU-1	NEW EQUIPMENT SYMBOL DESIGNATION

SYMBOL	DESCRIPTION
	NEW FLEX DUCT (TYPICAL FOR ALL RUN-OUT DUCTS TO DIFFUSERS)
	NEW MANUAL BALANCING DAMPER WITH OFFSET BRACKET AND EXTENDED PIN (OPPOSED BLADE DAMPER IN RECTANGULAR DUCT, BUTTERFLY DAMPER IN ROUND DUCT) DAMPER SHALL BE INSTALLED IN ACCESSIBLE LOCATION.
	NEW BACKDRAFT DAMPER. AIRFLOW SHALL ONLY BE PERMITTED IN DIRECTION INDICATED BY AIRFLOW ARROW. DAMPER SHALL BE INSTALLED IN ACCESSIBLE LOCATION.
	45-DEGREE DUCT TAP WITH BALANCE DAMPER, TYPICAL FOR ALL LOW PRESSURE DUCT CONNECTIONS (TAP SHALL BE FACTORY FABRICATED FOR ALL ROUND RUNOUT BRANCH DUCTS TO DIFFUSERS AND GRILLES). 45-DEGREE CONNECTION SHALL BE IN DIRECTION OF AIRFLOW. DAMPER SHALL BE INSTALLED IN ACCESSIBLE LOCATION.
	DUCT TRANSITION (DOES NOT INDICATE DIRECTION OF FLOW)
12/10	DUCT WIDTH BY DUCT HEIGHT
	NEW 90 DEGREE ELBOW W/ SINGLE WIDTH TURNING VANES OR NEW LONG RADIUS ELBOW (r/D = 1.5) OR NEW SHORT RADIUS ELBOW W/ SINGLE WIDTH TURNING VANES
	NEW MECHANICAL EQUIPMENT
1 RTU-1	NEW ROOM THERMOSTAT / ASSOCIATED EQUIPMENT

AIR DISTRIBUTION DEVICE SCHEDULE

MARK	DESCRIPTION	MOUNTING	MANUFACTURER AND MODEL #	MATERIAL	FINISH	REMARKS
D1	ADJUSTABLE CEILING SUPPLY DIFFUSER	LAY-IN CEILING	TITUS TMSA-AA	ALUMINUM	WHITE BAKED ENAMEL	24/24 FULLY LOUVERED FACE, ADJUSTABLE HOR/VERT DISCHARGE, 4-WAY THROW OR AS SHOWN, AND NECK SIZE AS INDICATED
D2	ADJUSTABLE CEILING SUPPLY DIFFUSER	SURFACE CLG. WITH RAPID MOUNT FRAME	TITUS TMSA-AA	ALUMINUM	WHITE BAKED ENAMEL	12/12 FULLY LOUVERED FACE, ADJUSTABLE HOR/VERT DISCHARGE, 4-WAY THROW OR AS SHOWN, AND NECK SIZE AS INDICATED
D3	SIDEWALL SUPPLY REGISTER	DUCT MOUNT	TITUS 300FL	ALUMINUM	COLOR BY ARCHITECT	DOUBLE DEFLECTION, 3/4" BLADE SPACING, FRONT BLADES PARALLEL TO LONG DIMENSION, NECK SIZE AS INDICATED ON PLAN. FURNISH W/OBD ADJ. THRU FACE.
G1	CEILING EXHAUST/ RETURN GRILLE	LAY-IN CEILING	TITUS 50F	ALUMINUM	WHITE BAKED ENAMEL	24/24 PANEL 1/2"x1/2"x1/2" EGG CRATE CORE
G2	CEILING EXHAUST/ RETURN GRILLE	LAY-IN CEILING	TITUS 50F	ALUMINUM	WHITE BAKED ENAMEL	24/12 PANEL 1/2"x1/2"x1/2" EGG CRATE CORE
G3	CEILING EXHAUST/ RETURN GRILLE	LAY-IN CEILING	TITUS 50F	ALUMINUM	WHITE BAKED ENAMEL	12/12 PANEL 1/2"x1/2"x1/2" EGG CRATE CORE
G4	SIDEWALL RETURN REGISTER	SURFACE SIDEWALL	TITUS 350ZFL	ALUMINUM	WHITE BAKED ENAMEL	3/4" BLADE SPACING WITH 0 DEG. DEFLECTION WITH FRONT BLADES PARALLEL TO LONG DIMENSION AND NECK SIZED ON DRAWING.
G5	CEILING EXHAUST/ RETURN GRILLE	SURFACE CLG. WITH RAPID MOUNT FRAME	TITUS 50F	ALUMINUM	WHITE BAKED ENAMEL	24/12 PANEL 1/2"x1/2"x1/2" EGG CRATE CORE
SR	SIDEWALL SUPPLY AIR REGISTER	SURFACE SIDEWALL	TITUS 300FL	ALUMINUM	WHITE BAKED ENAMEL	DOUBLE DEFLECTION, 3/4" BLADE SPACING, FRONT BLADES PARALLEL TO LONG DIMENSION AND NECK SIZED ON DRAWING. FURNISH WITH OPPOSED BLADE DAMPERS ADJUSTABLE THRU FACE.
L1	EXTERIOR WALL LOUVER	SURFACE MOUNTED	RUSTKIN ELF-375DX	ALUMINUM	KYNAR 500, COLOR BY ARCHITECT	LOUVER SIZE AS INDICATED. FLANGE MOUNT. PROVIDE WITH BIRDSCREEN.

NOTES:
1. AIR DISTRIBUTION DEVICES SERVING WAREHOUSE AREA SHALL BE CONSTRUCTED WITH MATERIALS AND FINISHES SUITABLE FOR USE WITH EVAPORATIVE COOLING.
2. PROVIDE TAPERED TRANSITIONS FOR ALL SUPPLY DIFFUSERS WITH NECK SIZES DIFFERENT THAN SUPPLY DUCT RUN-OUT SIZES.
3. PROVIDE UNIT WITH OPPOSED BLADE DAMPERS WHEN INSTALLED IN GYP BOARD CEILINGS WHERE MANUAL BALANCING DAMPERS ARE NOT INSTALLED FOR BALANCING AIRFLOWS.

GAS FIRED INFRA-RED TUBE HEATER SCHEDULE

MARK	SERVICE	LENGTH (FEET)	REFLECTOR ANGLE	AMPS	POWER SUPPLY	HEATING INPUT (MBH)	HEATING OUTPUT (MBH)	MANUFACTURER AND MODEL #
IRH-1	INTAKE GARAGE	30	0°	2.6	120/1	50	31.5	SPACE-RAY LTS-50-30
IRH-2	INTAKE GARAGE	15	0°	2.6	120/1	40	25	SPACE-RAY LTS-40-15

NOTES:
1. PROVIDE PROPER BURNERS AND ORIFICES FOR SITE ELEVATION.
2. COORDINATE EXACT LOCATION AND MOUNTING HEIGHT WITH OWNER. DO NOT INSTALL ABOVE OR BELOW MOUNTING HEIGHTS REQUIRED BY MANUFACTURER.
3. INSTALL VENT AND COMBUSTION AIR DUCT PER MANUFACTURER'S REQUIREMENTS. PROVIDE VENT WITH ALL REQUIRED CLEARANCES TO COMBUSTIBLES.
4. INSTALL UNITS PER MANUFACTURER'S REQUIREMENTS. PROVIDE UNITS WITH ALL REQUIRED SERVICE AND OPERATIONAL CLEARANCES, INCLUDING ALL REQUIRED CLEARANCES TO COMBUSTIBLES.

ACCESSORIES: HIGH ALTITUDE CONVERSION KIT, HANGER KIT, END CAP, COMBUSTION AIR INLET KIT, DRAFT INDUCER, WALL-MOUNTED THERMOSTAT.

EVAPORATIVE COOLER SCHEDULE

MARK	AREA SERVED	FAN DATA CFM	FAN DATA EXT. SP	FAN DATA FAN HP	FAN DATA SPEED	POWER SUPPLY	APPROX. WEIGHT (LBS)	MANUFACTURER AND MODEL #	REMARKS
EC-1	CANINE RUN #1 117	3,000	0.5"	3/4	1	115V/1Ø	480	PHOENIX MANUFACTURING EVAPCOOL FRIGIKING FS 650	PROVIDE WITH 115V/1Ø INTEGRAL CIRC. PUMP
EC-2	CANINE RUN #2 120	3,000	0.5"	3/4	1	115V/1Ø	480	PHOENIX MANUFACTURING EVAPCOOL FRIGIKING FS 650	PROVIDE WITH 115V/1Ø INTEGRAL CIRC. PUMP
EC-3	CANINE RUN #3 138	3,000	0.5"	3/4	1	115V/1Ø	480	PHOENIX MANUFACTURING EVAPCOOL FRIGIKING FS 650	PROVIDE WITH 115V/1Ø INTEGRAL CIRC. PUMP
EC-4	CANINE HOLD/ QUARANTINE 155	2,000	0.5"	3/4	1	115V/1Ø	480	PHOENIX MANUFACTURING EVAPCOOL FRIGIKING FS 650	PROVIDE WITH 115V/1Ø INTEGRAL CIRC. PUMP
EC-5	INTAKE GARAGE 158	3,890	0.5"	3/4	1	115V/1Ø	480	PHOENIX MANUFACTURING EVAPCOOL FRIGIKING FS 650	PROVIDE WITH 115V/1Ø INTEGRAL CIRC. PUMP

NOTES:
1. UNITS ARE SELECTED AT AN ELEVATION OF 5,200 FT ABOVE SEA LEVEL.
2. PROVIDE UNITS WITH ASPEN PAD MEDIA.
3. ELECTRICAL CONTRACTOR TO PROVIDE ON/OFF FAN SWITCH AND A PUMP ON/OFF SWITCH.
4. PROVIDE ALL SERVICE AND OPERATIONAL CLEARANCES AS REQUIRED, INCLUDING ALL CLEARANCES REQUIRED BY NEC ARTICLE 110.
5. PROVIDE WITH FLOAT AND OVER FLOW CONNECTIONS.

GENERAL MECHANICAL NOTES

A. ALL DUCT SIZES SHOWN ARE INSIDE FREE AREA DIMENSIONS. INSTALL WORK AS HIGH AS POSSIBLE AND CAREFULLY COORDINATE ALL WORK WITH STRUCTURAL, ELECTRICAL, PLUMBING, ETC.

B. ALL FLEXIBLE DUCT SHALL BE FULLY EXTENDED AND SUPPORTED, FREE OF KINKS, NO LONGER THAN 5'-0" AND SAME SIZE AS DIFFUSER NECK. USE RIGID ELBOW AT CONNECTION TO DIFFUSER.

C. PROVIDE FLEXIBLE CONNECTIONS AT ALL EXHAUST FANS AND ANY OTHER EQUIPMENT WITH VIBRATION-PRODUCING COMPONENTS.

D. ALL DIFFUSERS AND GRILLES SMALLER THAN THE CEILING T-BAR SPACING SHALL BE INDEPENDENTLY SUPPORTED FROM THE STRUCTURE ABOVE WITH CEILING TIE WIRES AND SHALL HAVE CONCEALED FASTENERS.

E. ALL EXHAUST TERMINATIONS, FLUES, AND PLUMBING VENTS SHALL BE LOCATED AT LEAST 10'-0" FROM ANY OUTSIDE AIR INTAKES.

F. ALL LOW VOLTAGE CONTROL WIRING SHALL BE PROVIDED AND INSTALLED BY MECHANICAL DIVISION UNLESS NOTED OTHERWISE.

G. LOCATION OF THERMOSTATS AND ACCESS DOORS SHALL BE VERIFIED WITH ARCHITECT BEFORE INSTALLATION.

H. LINE TRANSFER DUCTS WITH 1" INTERNAL INSULATION WHERE NOTED ON PLANS. ALL DUCTWORK OUTSIDE OF INSULATED ENVELOPE, INCLUDING SUPPLY, RETURN, EXHAUST, AND TRANSFER DUCTS, SHALL BE WRAPPED WITH MINIMUM R-11 EXTERNAL INSULATION, WITH VAPOR RETARDER WITH ALL JOINTS SEALED. ALL OTHER DUCTWORK SHALL BE WRAPPED WITH MINIMUM R-5 EXTERNAL INSULATION. ALL INSULATION SHALL MEET LOCAL ENERGY CODE REQUIREMENTS. (NOTE: FLUES AND VENTS, WHETHER WITHIN OR OUTSIDE OF INSULATED ENVELOPE, SHALL BE UNINSULATED)

I. COORDINATE EXACT LOCATION AND MOUNTING HEIGHT OF WALL CAP WITH ARCHITECT BEFORE INSTALLATION.

J. PROVIDE INLET AND OUTLET TRANSITIONS AS REQUIRED AT EACH EXHAUST FAN, WALL CAP, ROOF CAP, AIR DISTRIBUTION DEVICE, ETC.

K. CLEAR SPACE ALLOWANCE FOR ALL DUCTWORK IS VERY MINIMAL AND WILL REQUIRE CAREFUL COORDINATION WITH OTHER TRADES. VERIFY ALL DIMENSIONS BOTH ON THE DRAWINGS AND ON SITE BEFORE LAYING OUT, CUTTING, AND FABRICATING THE WORK. MECHANICAL DIVISION SHALL BE RESPONSIBLE FOR ALL SHEET METAL WORK THAT IS CUT AND FABRICATED FROM THE CONTRACT DRAWINGS WITHOUT DIMENSIONAL VERIFICATION. MECHANICAL DIVISION SHALL ALSO BE RESPONSIBLE FOR ALL DUCT AND PIPE OFFSETS REQUIRED TO AVOID STRUCTURAL ELEMENTS, CHANGES IN CEILING HEIGHTS, AND ALL WORK BY OTHER TRADES.

L. PROVIDE ALL EQUIPMENT WITH ALL REQUIRED SERVICE AND OPERATIONAL CLEARANCES, INCLUDING ALL REQUIRED CLEARANCES TO COMBUSTIBLES (WHERE APPLICABLE) AND ALL CLEARANCES REQUIRED BY NEC ARTICLE 110.

M. COORDINATE WORK WITH OTHER TRADES TO MINIMIZE CONFLICTS AND "DOWN TIME".

N. ALL EQUIPMENT CAPACITIES ARE SCHEDULED AT SEA LEVEL.

O. ALL WORK SHALL COMPLY WITH ALL LOCAL AND NATIONAL CODES.

P. MECHANICAL DIVISION SHALL KEEP UPDATED AS-BUILT DRAWINGS ON SITE FOR REVIEW DURING CONSTRUCTION. PROVIDE AS-BUILT DRAWINGS TO OWNER AFTER CONSTRUCTION HAS BEEN COMPLETED.

Q. CONSTRUCT LOW VELOCITY/LOW PRESSURE DUCT WORK AS SPECIFIED IN THE CURRENT SMACNA HVAC CONSTRUCTION STANDARDS, FOR 2" wg PRESSURE CLASSES.

R. ALL DUCT ROUTING IS SHOWN IN APPROXIMATE LOCATIONS. ALL EQUIPMENT LOCATIONS SHOWN ARE APPROXIMATE. MECHANICAL DIVISION SHALL COORDINATE ROUTING OF DUCTWORK AND LOCATION OF EQUIPMENT WITH ALL OTHER TRADES TO ENSURE PROPER INSTALLATION AND TO AVOID CONFLICTS.

S. CONTRACTOR SHALL BE RESPONSIBLE FOR REPAIRING AND FINISHING SURFACES (WALLS, FLOORS, CEILINGS) DAMAGED DURING REMOVAL OF EQUIPMENT UNLESS REMOVAL OR RENOVATION OF SURFACE IS COVERED UNDER ANOTHER SECTION OF THIS CONTRACT.

T. DUCT ROUTING IS APPROXIMATE ONLY. EACH BIDDER SHALL SATISFY HIMSELF AS TO EXISTING BUILDING CONDITIONS BEFORE SUBMITTING HIS BID. NO ALLOWANCE SHALL BE MADE AFTER CONTRACT IS AWARDED TO ALLOW FOR LACK OF PRE-BID INSPECTION OF BUILDING BY SUCCESSFUL BIDDER.

U. CONTROLS PRICE SHALL BE INCLUDED IN MECHANICAL DIVISION PRICE.

THE RESPONSE GROUP, INC.
An Electrical/Mechanical Engineering Corporation
11930 Menaul N.E. Suite 214
Albuquerque, New Mexico 87112
Phone:(505) 323-7629 Fax:(505) 323-7594
E-mail: theresponsegroup@trg-inc.net

901 Lamberton Pl. NE
Albuquerque, NM 87107
Phone: (505) 858-0180
Fax: (505) 858-0111
Email: info@bdaarc.com

The documents transmitted herein are the sole Intellectual Property of BDA Architecture, P.C. Any use, reuse, or reproduction in any form without the express written consent of, and compensation to, BDA Architecture is a violation of federal law.

BDA

STATE OF NEVADA PROFESSIONAL ENGINEER DAVID C. GRAHAM MECHANICAL No. 15016 9/2/2015

15016 6/30/16

CARSON CITY ANIMAL SERVICES
549 Airport Road
Carson City, Nevada 89701
City of Carson City

Copyright, 2015, BDA ARCHITECTURE PC.

MECHANICAL SCHEDULES

REV.#	DATE	COMMENTS
REVISION: -		
REVISION: -		
REVISION: -		
REVISION: -		

REVIEWS

INITIALS	
	BDA DSGN. REV.
	BDA TECH REV.

CCAS
PROJECT NO.: 1107
DRAWN: MAR/CMB
DATE: 2/27/2015

M601

OF

Save Date: March 2, 2015 - 10:58 AM - Miguel
Plot Date: March 2, 2015 - 12:34 PM
Drawing Name: Z:\Projects\2015\1501\1 Canon City, NV Animal Services\3-2-15\cust150\16 - M601 - Mechanical Schedules and General Notes.dwg

AIR CONDITIONING UNIT SCHEDULE

MARK	MAX CFM	MAX COOL CAPACITY	MIN COOL CAPACITY	MAX HEAT CAPACITY	MIN HEAT CAPACITY	ELECTRICAL DATA			APPROX. WT. (LBS.)	MANUFACTURER AND MODEL #
						VOLT/PHASE	MCA	MAX FUSE SIZE		
AC-3	700	15,000 BTUH	12,000 BTUH	15,000 BTUH	12,000 BTUH	208/1	1.0	SEE NOTE 2	75	MITSUBISHI PKFY-P18NHMU-E2

NOTES:
1. PROVIDE ALL SERVICE AND OPERATIONAL CLEARANCES AS REQUIRED, INCLUDING ALL CLEARANCES REQUIRED BY NEC ARTICLE 110.
2. ELECTRICAL DIVISION SHALL EXTEND LINE VOLTAGE ELECTRICAL SERVICE TO AC UNIT FROM ASSOCIATED CONDENSING UNIT AS REQUIRED.
3. MAXIMUM COOLING CAPACITIES ARE LISTED FOR 80°F DB / 67° F WB INDOOR, 95°F DB OUTDOOR.
4. MAXIMUM HEATING CAPACITIES ARE LISTED FOR 70°F DB INDOOR, 17°F DB OUTDOOR.
5. HEATING AND COOLING CAPACITIES ARE LISTED FOR SEA LEVEL CONDITIONS.
6. PROVIDE CONDENSATE PUMP FOR AC-8 ONLY.

ACCESSORIES:
1. WIRELESS REMOTE CONTROLLER. PROVIDE WALL MOUNT HOLDING BRACKET.
2. CLEANABLE FILTERS.
3. CONDENSATE PUMP

INDOOR CEILING UNIT - AIR CONDITIONING UNIT SCHEDULE

MARK	MAX/MIN CFM (WET)	MAX COOL CAPACITY	MAX HEAT CAPACITY	SOUND LEVEL DBA	ELECTRICAL DATA			WT.(LBS)	MANUFACTURER AND MODEL #
					VOLT/PHASE	MCA	MAX FUSE SIZE		
AC-1	350/390	12,000 BTUH	13,500 BTUH	40	208/1	.35	N/A	50	MITSUBISHI PLFY-P12NCMU-ER4
AC-2	350/390	12,000 BTUH	13,500 BTUH	40	208/1	.35	N/A	50	MITSUBISHI PLFY-P12NCMU-ER4

GENERAL: DAIKIN AND LG ARE CONSIDERED EQUIVALENT UNITS

NOTES:
1. PROVIDE ALL SERVICE AND OPERATIONAL CLEARANCES AS REQUIRED, INCLUDING ALL CLEARANCES REQUIRED BY NEC ARTICLE 110.
2. ELECTRICAL DIVISION SHALL EXTEND LINE VOLTAGE ELECTRICAL SERVICE TO AC UNIT FROM ASSOCIATED CONDENSING UNIT AS REQUIRED.
3. MAXIMUM COOLING CAPACITIES ARE LISTED FOR 80°F DB / 67° F WB INDOOR, 95°F DB OUTDOOR.
4. UNITS ARE LISTED FOR SEA LEVEL CONDITIONS.
5. FURNISH UNIT WITH CONDENSATE LIFT MECHANISM
6. AC-1 AND AC-2 SHALL BE INSTALLED IN THE CEILING GRID (2'X2').

ACCESSORIES:
1. WIRELESS REMOTE CONTROLLER KIT MHK1 (WITH MRCH1, MIFH1, AND MRC1). INSTALL THERMOSTAT ON WALL AT 48" AFF.
2. CLEANABLE FILTERS.
3. CONDENSATE PUMP

OUTDOOR -AIR COOLED CONDENSING UNIT SCHEDULE

MARK	SERVES	SEER	ELECTRICAL DATA			APPROX. WT. (LBS.)	DIMENSIONS H"xW"xD"	MANUFACTURER AND MODEL #
			VOLT/PHASE	MCA	BREAKER			
CU-1	AC-1,2&3	14.3	208/1	26	30 A	287	54x38x13	MITSUBISHI PUMY-P36NHMUR4

GENERAL: DAIKIN AND LG ARE CONSIDERED EQUIVALENT UNITS

NOTES:
1. SIZE AND INSTALL REFRIGERANT PIPING BETWEEN CONDENSING UNITS AND ASSOCIATED AIR CONDITIONING UNITS ACCORDING TO MANUFACTURER'S REQUIREMENTS. PIPING SHALL NOT EXCEED LENGTH ALLOWED BY MANUFACTURER.
2. ACCESSORIES: HIGH AND LOW AMBIENT CONTROLS, WINTER START CONTROL, WIND BAFFLES, TIME DELAY RELAY, CYCLE PROTECTOR, TXV, LOW AND HIGH PRESSURE SWITCHES.
3. PROVIDE CRANKCASE HEATER AND/OR FILTER DRIER IF RECOMMENDED BY MANUFACTURER.
4. ALL CONDENSING UNIT CONTROL WIRING SHALL BE PROVIDED AND INSTALLED BY MECHANICAL DIVISION.
5. SEER RATING LISTED IS FOR CONDENSING UNIT PAIRED WITH ASSOCIATED AIR C0NDITIONING OR AIR HANDLING UNIT.
6. PROVIDE ALL SERVICE AND OPERATIONAL CLEARANCES AS REQUIRED, INCLUDING ALL CLEARANCES REQUIRED BY NEC ARTICLE 110.
7. LOW AMBINET CONTROLS DOWN TO ZERO DEGREES F.
8. FURNISH 7 YEAR COMPRESSOR AND 1 YEAR PARTS AND SERVICE WARRANTY

ELECTRIC BASEBOARD HEATER SCHEDULE

MARK	SERVICE	POWER SUPPLY	LENGTH	WATTS	BTU/HR.	MANUFACTURER AND MODEL #	REMARKS
EBH-1	VESTIBULE 101	120V/1Ø	6'-0"	1500	5118	BERKO BKOC2516W	PROVIDE INTEGRAL, TAMPER-PROOF THERMOSTAT

Tags	Model Number	Nominal Size (Ton)	Design Airflow (cfm)	Outside Air (cfm)	Design ESP (in)	Gross Total Capacity (MBH)	Gross Sensible Capacity (MBH)	Cooling Entering DB (F)	Cooling Entering WB (F)	Cooling Leaving Unit DB (F)	Cooling Leaving Unit WB (F)	Ambient Temp. (F)	Reheat Capacity (MBH)	Cooling LDB with reheat (F)	Input Heating Capacity (MBH)	Output Heating Capacity @ 4500 ft (MBH)	Heating EAT (F)	Heating LAT (F)	V/Hz/Ph	MCA	MOP	SEER /EER	Unit Operating Weight (lbs)	Elevation (ft)
RTU-1	OADD096A	7.5	3000	2000	0.5	100.3	100.3	90	65	55.7	52.2	95	39.4	67.8	300	192	15	86.1	208/60/3	59.8	70	11.2	2100	4500
RTU-2	YHC060E	5	2200	550	0.5	61.24	45.01	80	65	59.77	56.31	95	40.43	74.3	130	85	50	94	208/60/3	27.4	40	14.2	950	4500
RTU-3	OADD072A	6	2000	1500	0.5	66	66	90	65	56.2	52.4	95	51.9	80.1	200	128	15	86.1	208/60/3	36.4	50	11	2000	4500
RTU-4	YHC060E	5	2200	550	0.5	61.24	45.01	80	65	59.77	56.31	95	40.43	74.3	130	85	50	94	208/60/3	27.4	40	14.2	950	4500

NOTES:
1. ROOFTOP UNIT INDOOR FANS SHALL BE STANDARD MOTOR AND DRIVE WITH BELT DRIVE AND SHALL RUN CONTINUOUSLY DURING BUILDING OPERATION.
2. EXTERNAL STATIC PRESSURE DOES NOT INCLUDE ANY PRESSURE DROP ASSOCIATED WITH ROOFTOP UNIT ACCESSORIES.
3. PROVIDE ALL SERVICE AND OPERATIONAL CLEARANCES AS REQUIRED, INCLUDING ALL CLEARANCES REQUIRED BY NEC ARTICLE 110.
4. SET MINIMUM OUTSIDE AIR AS SPECIFIED ABOVE. OUTSIDE AIR DAMPER SHALL FULLY CLOSE ON UNIT SHUTDOWN.
5. SMOKE DETECTORS SHALL BE INSTALLED IN SUPPLY AND RETURN SIDES OF RTU-1 THRU RTU-4 BY MECHANICAL DIVISION. DETECTORS TO BE PROVIDED BY ELECTRICAL DIVISION, WIRED TO BUILDING FIRE ALARM SYSTEM BY ELECTRICAL DIVISION, AND WIRED TO UNIT BY ELECTRICAL DIVISION TO SHUT UNIT DOWN UPON SENSING SMOKE. COORDINATE INSTALLATION IN UNIT WITH UNIT MANUFACTURER.
6. PROVIDE ALL UNITS WITH STAINLESS STEEL HEAT EXCHANGER
7. PROVIDE ALL UNITS WITH DRY BULD ECONOMIZER
8. PROVIDE ALL UNITS WITH HIGH AITTUDE KIT

ACCESSORIES:
1. 14" HIGH FACTORY-FABRICATED MICROMETL INSULATED ROOF CURB, SLOPED TO MATCH PITCH OF ROOF TO ALLOW UNIT TO SIT LEVEL.
2. MICROMETL ECONOMIZER WITH FULLY MODULATING CENTRIFUGAL POWER EXHAUST, FACTORY-WIRED TO ALLOW SINGLE-POINT POWER CONNECTION TO ROOFTOP UNIT. MCA/MOCP LISTED IN SCHEDULE DOES NOT INCLUDE POWER EXHAUST ELECTRICAL LOAD. PROVIDE WITH DUCT PRESSURE SENSOR.
3. COMPRESSOR SHORT CYCLE PROTECTION.
4. ELECTRONIC PROGRAMMABLE THERMIDISTAT (COMBINATION THERMOSTAT/HUMIDISTAT) WITH AUTO HEAT/COOL SWITCHOVER, HUMIDITY SENSOR, HUMIDI-MIZER CONTROL, AND KEYPAD LOCKOUT CAPABILITY. ALL CONTROL WIRING SHALL BE PROVIDED AND INSTALLED BY MECHANICAL DIVISION.
5. 2" 30% EFFICIENT FILTERS EQUAL TO FARR 30/30. (2 SETS)
6. CONDENSER COIL HAIL GUARD ASSEMBLY.
7. HUMIDI-MIZER DEHUMIDIFICATION/SUB-COOLING SYSTEM.
8. E-COATED COPPER COILS/ALUMINUM FINS SUITABLE FOR LOCAL COASTAL ENVIRONMENTAL CONDITIONS. COORDINATE WITH MANUFACTURER.

ENERGY RECOVERY VENTILATOR UNIT SCHEDULE

MARK	MANUFACTURER MODEL #	SYSTEM STYLE	EXHAUST CFM	OUTSIDE AIR CFM	OUTSIDE STATIC PRESSURE	EXHAUST STATIC PRESSURE	RECOVERED LOAD HEATING (MBH)	SUPPLY FAN BHP	RETURN FAN BHP	ELECTRICAL			APPROX. WEIGHT LBS
										MCA	MOCP	VOLT/ PHASE	
ERV-1	MICROMETL ERVA-0510-H23	HORRIZONTAL DISCHARGE COMBO-CURB FOR CARRIER RTU	1,000	1,000	0.50	1	72	1/2	1/2	4.4	5.5	208/3	1,600
ERV-2	MICROMETL ERVA-1014-H23	DOWN DISCHARGE COMBO-CURB FOR CARRIER RTU	1,200	1,200	0.95	1	68	1	1	7.4	9.4	208/3	1,500
ERV-3	MICROMETL ERVA-0510-H23	DOWN DISCHARGE COMBO-CURB FOR CARRIER RTU	800	800	0.50	1	72	1/2	1/2	4.4	5.5	208/3	1,500
ERV-4	MICROMETL ERVA-0510-H23	DOWN DISCHARGE COMBO-CURB FOR CARRIER RTU	900	900	0.50	1	72	1/2	1/2	4.4	5.5	208/3	1,500

THE RESPONSE GROUP, INC.
An Electrical/Mechanical Engineering Corporation
11930 Menaul N.E. Suite 214
Albuquerque, New Mexico 87112
Phone:(505) 323-7629 Fax:(505) 323-7594
E-mail: theresponsegroup@trg-inc.net

901 Lamberton Pl. NE
Albuquerque, NM 87107
Phone: (505) 858-0180
Fax: (505) 858-0111
Email: info@bdaarc.com

The documents transmitted herein are the sole Intellectual Property of BDA Architecture, P.C. Any use, reuse, or reproduction in any form without the express written consent of, and compensation to, BDA Architecture is a violation of federal law.

BDA

STATE OF NEVADA PROFESSIONAL ENGINEER MECHANICAL DAVID C. GRAHAM No.018498 9/2/2015

15016 8/30/16

CARSON CITY ANIMAL SERVICES

549 Airport Road
Carson City, Nevada 89701
City of Carson City

Copyright, 2015, BDA ARCHITECTURE PC.

MECHANICAL SCHEDULES

REV.#	DATE	COMMENTS
REVISION: -		
REVISION: -		
REVISION: -		
REVISION: -		

REVIEWS	
INITIALS	
	BDA DSGN. REV.
	BDA TECH REV.

CCAS

PROJECT NO.: 1107
DRAWN: MAR/CMB
DATE: 2/27/2015

M602

OF

Save Date: March 2, 2015 - 10:59 AM - Miguel
Plot Date: March 2, 2015 - 12:23 PM
Drawing Name: Z:/Projects/2015/1107/11 Carson City, NV Animal Services/3-2-15/cacr15016 - M601 - Mechanical Schedules and General Notes.dwg

KEYED NOTES

1. ALL LIGHT FIXTURES AND ELECTRICAL DEVICES LOCATED IN ROOM SHALL BE WEATHER-PROOF OR WET LISTED.
2. JUNCTION BOX FOR CONNECTION OF CEILING MOUNTED EXAM LIGHT. VERIFY EXACT LOCATION.
3. JUNCTION BOX FOR CONNECTION OF CEILING MOUNTED SURGICAL LIGHT. VERIFY EXACT LOCATION.
4. EXTEND TO FIXTURE TYPE "F". REFER TO DETAIL A1/E101 FOR CONTINUATION.
5. EXTEND TO LIGHT SWITCH IN ROOM.
6. EXTEND LIGHTING CIRCUIT TO "CANINE ACQUAINT 121".
7. EXTEND LIGHTING CIRCUIT TO "CANINE ACQUAINT 118." REFER TO DETAIL A1/E101 FOR CONTINUATION.
8. EXTEND LIGHTING CIRCUIT TO FIXTURE TYPE "K" LOCATED IN "ADOPTION LOBBY 107."
9. EXTEND LIGHTING CIRCUIT TO FIXTURE TYPE "F" IN "VESTIBULE 101." REFER TO DETAIL A6/E101 FOR CONTINUATION.
10. EXTEND CIRCUIT THROUGH TIME CLOCK / PHOTO-CELL CONTROLLER AND THEN TO PANEL INDICATED. REFER TO DETAIL ON SHEET E202.
11. TIME CLOCK / PHOTO-CELL CONTROLLER. REFER TO DETAIL ON SHEET E202.
12. PROVIDE AND INSTALL A DIMMER SWITCH, 0-10V, SLIDE TO OFF. DIMMER SWITCH SHALL BE EQUAL TO LUTRON.

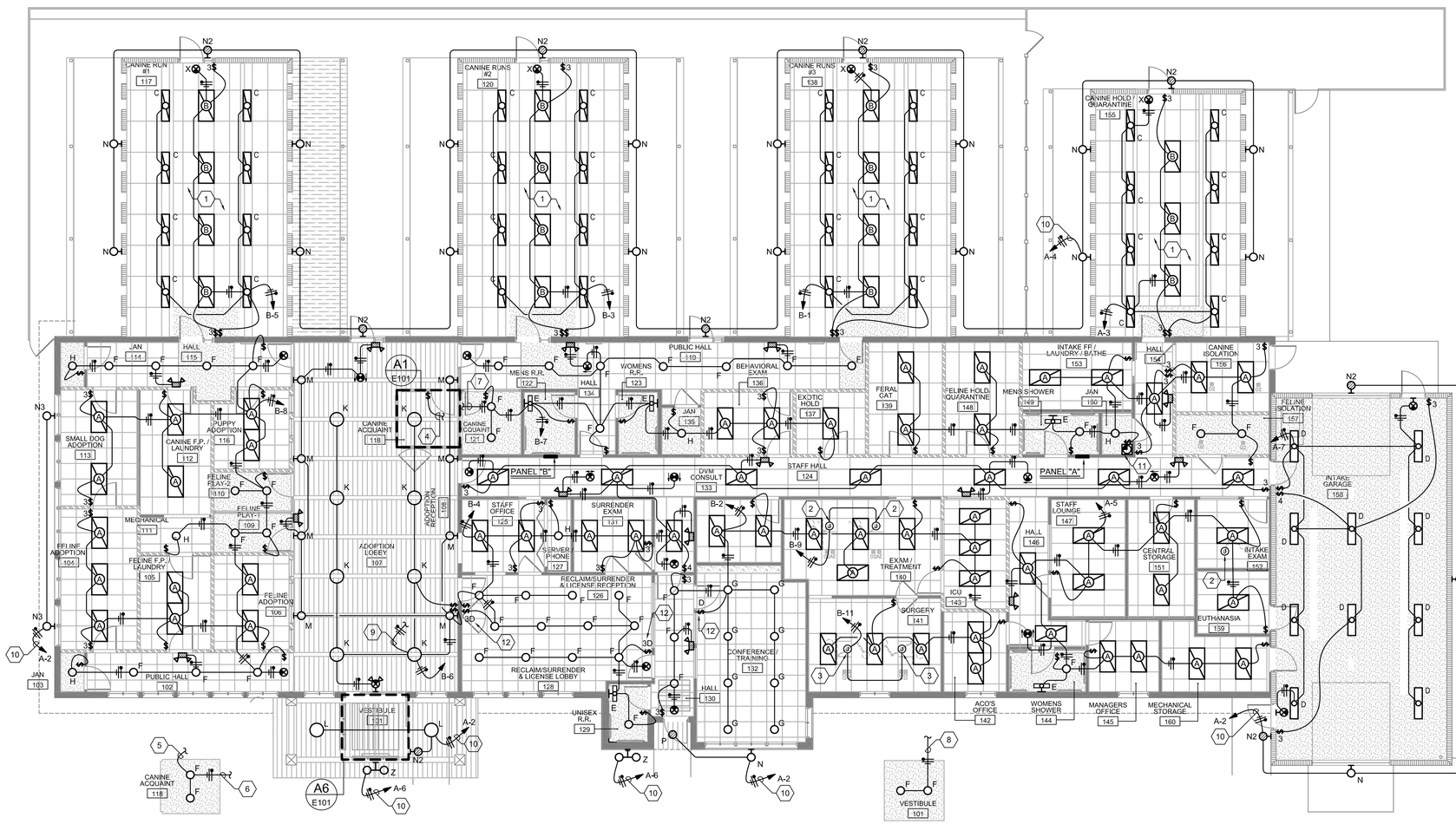

A1 PARTIAL LTG PLAN
1/8" = 1'-0" CANINE ACQUAINT [118]

A3 LIGHTING PLAN
1/8"=1'-0"

PROJECT NORTH

A6 PARTIAL LTG PLAN
1/8" = 1'-0" VESTIBULE [101]

901 Lamberton Pl. NE
Albuquerque, NM 87107
Phone: (505) 858-0180
Fax: (505) 858-0111
Email: info@bdaarc.com

The documents transmitted herein are the sole Intellectual Property of BDA Architecture, P.C. Any use, reuse, or reproduction in any form without the express written consent of, and compensation to, BDA Architecture is a violation of federal law.

BDA

STATE OF NEVADA
DAVID A. DALMAS
ELECTRICAL
15016
2/27/15

CARSON CITY ANIMAL SERVICES

549 Airport Road
Carson City, Nevada 89701
City of Carson City

Copyright, 2015, BDA ARCHITECTURE PC.

LIGHTING PLAN

REV.#	DATE	COMMENTS
REVISION: -		
REVISION: -		
REVISION: -		
REVISION: -		

REVIEWS	
INITIALS	
	BDA DSGN. REV.
	BDA TECH REV.

CCAS
PROJECT NO.: 1107
DRAWN: RP / RW / JKD
DATE: 2/27/2015

E101
OF

THE RESPONSE GROUP, INC.
An Electrical/Mechanical Engineering Corporation
11930 Menaul N.E. Suite 214
Albuquerque, New Mexico 87112
Phone:(505) 323-7629 Fax:(505) 323-7594
E-mail: theresponsegroup@trg-inc.net

Save Date: February 26, 2015 - 4:02 PM - Julie
Plot Date: February 26, 2015 - 5:11 PM
Drawing Name: F:\15016 Carson City Animal Services\15016 CADD\Constructs\Electrical\15016 - E101 - Lighting Plan.dwg

KEYED NOTES

1. 240V-30A-2P-3W DRYER OUTLET. USE #10 CONDUCTORS THROUGHOUT CIRCUIT.
2. PROVIDE AND INSTALL CONCRETE FILLED BOLLARDS FOR PROTECTION OF PANELBOARD.
3. RECEPTACLE FOR UNDER COUNTER REFRIGERATOR. VERIFY EXACT LOCATION.
4. RECEPTACLE FOR DISHWASHER. VERIFY EXACT LOCATION.
5. RECEPTACLE FOR MEDICAL GAS BUZZER. VERIFY EXACT LOCATION..
6. JUNCTION BOX FOR DOOR CONTROLLER. MOUNT AT 48" A.F.F. EXTEND 3/4" CONDUIT WITH REQUIRED CONTROL CONDUCTORS UP TO DOOR CONTROLLER.
7. JUNCTION BOX FOR ACCESS CONTROL SYSTEM. VERIFY BOX LOCATION AND EXTEND CAT 6 CABLE TO SERVER ROOM 127 AND TERMINATE AS DIRECTED BY MANUFACTURER. REFER TO ARCHITECTURAL DOOR SCHEDULE FOR ACCESS REQUIREMENTS.
8. FUSIBLE DISCONNECT SWITCH FOR PORTABLE ENGINE-GENERATOR. REFER TO POWER RISER DIAGRAM FOR ADDITIONAL INFORMATION.
9. 240V-200A-3P-4W FUSIBLE DISCONNECT SWITCH FOR COMMERCIAL DRYER. FUSE AS RECOMMENDED BY UNIT MANUFACTURER. 1 1/4" CONDUIT WITH (4) #2 AND (1) #6 GROUND.
10. JUNCTION BOX FOR POWER CONNECTION TO WATER HEATER.
11. 240V-20A-2P-3W, NEMA L6-20R FOR WASHING MACHINE. COORDINATE NEMA CONFIGURATION WITH EQUIPMENT BEING SUPPLIED.
12. RECEPTACLE FOR POWER CONNECTION TO FIRE ALARM GONG. VERIFY EXACT LOCATION.
13. RECEPTACLE FOR CONNECTION OF IRRIGATION CONTROLLER. VERIFY EXACT LOCATION.
14. REFER TO POWER RISER DIAGRAM FOR ADDITIONAL INFORMATION.

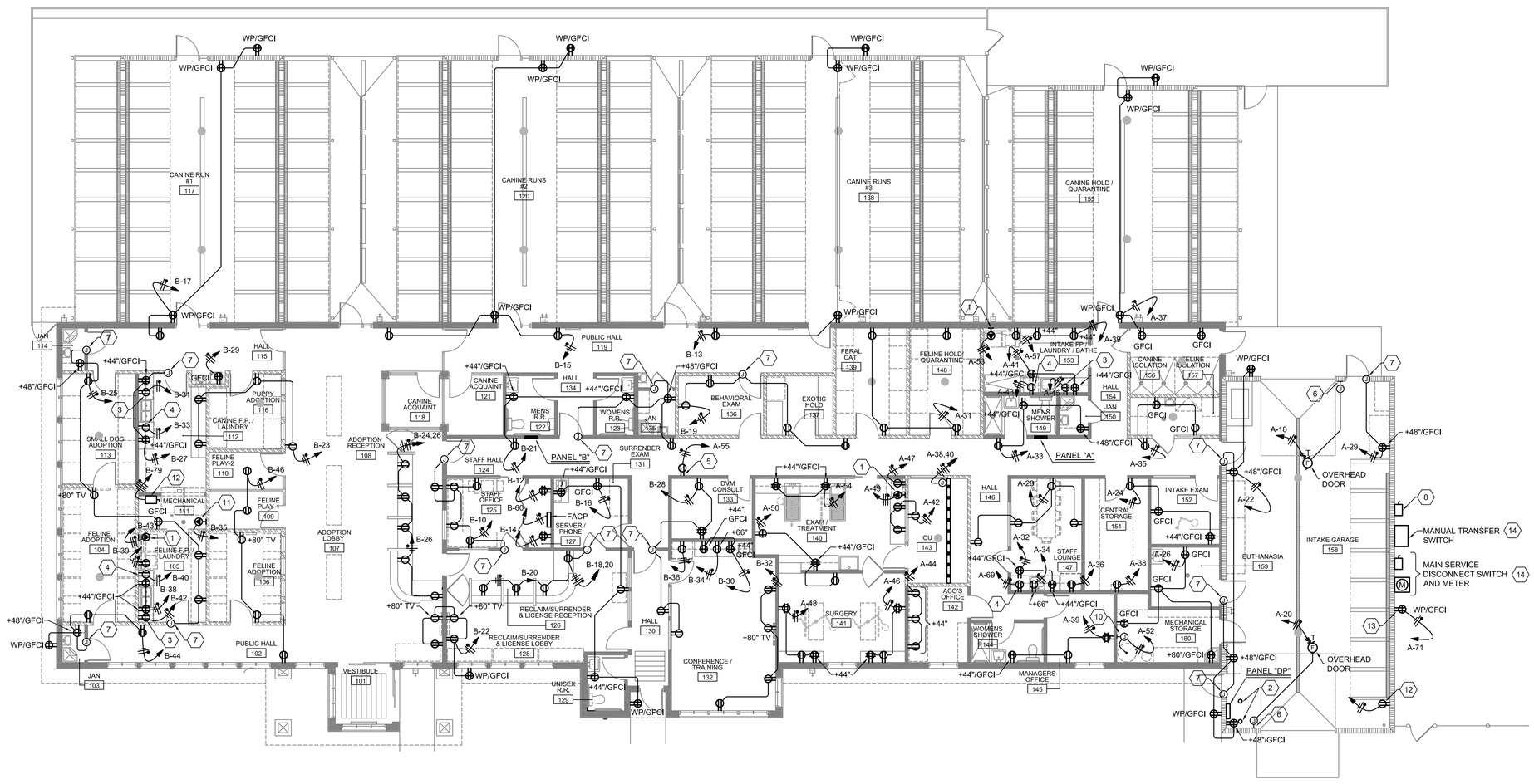

A1 RECEPTACLE PLAN
1/8"=1'-0"

PROJECT NORTH

901 Lamberton Pl. NE
Albuquerque, NM 87107
Phone: (505) 858-0180
Fax: (505) 858-0111
Email: info@bdaarc.com

The documents transmitted herein are the sole Intellectual Property of BDA Architecture, P.C. Any use, reuse, or reproduction in any form without the express written consent of, and compensation to BDA Architecture is a violation of federal law.

BDA

STATE OF NEVADA
DAMIAN GIELE
ELECTRICAL
22715
15016

CARSON CITY ANIMAL SERVICES

549 Airport Road
Carson City, Nevada 89701
City of Carson City

Copyright, 2015, BDA ARCHITECTURE PC.

RECEPTACLE PLAN

REV.#	DATE	COMMENTS
REVISION:	-	
REVISION:	-	
REVISION:	-	
REVISION:	-	

REVIEWS

INITIALS	
	BDA DSGN. REV.
	BDA TECH REV.

CCAS

PROJECT NO.: 1107
DRAWN: RP / RW / JKD
DATE: 2/27/2015

E102

OF

THE RESPONSE GROUP, INC.
An Electrical/Mechanical Engineering Corporation
11930 Menaul N.E. Suite 214
Albuquerque, New Mexico 87112
Phone:(505) 323-7629 Fax:(505) 323-7594
E-mail: theresponsegroup@trg-inc.net

Save Date: February 26, 2015 - 4:01 PM - Julie
Plot Date: February 26, 2015 - 5:11 PM
Drawing Name: F:\15016 Carson City Animal Services\15016 CADD\Constructs\Electrical\15016 - E102 - Receptacle Plan.dwg

KEYED NOTES

1. CONNECTION OF FIRE ALARM TAMPER AND FLOW SWITCHES TO THE FIRE ALARM SYSTEM, BY OTHERS.
2. FLUSH 8" CEILING MOUNTED SPEAKER WITH BACKBOX CAPABLE OF INSTALLING IN DRYWALL, PLASTER OR SUSPENDED LAY-IN CEILING, WITH ALL COMPONENTS, DRIVER, TRANSFORMERS, ETC, FOR A COMPLETE WORKABLE SYSTEM. EXTEND WIRING BACK TO ROOM 127 AND TERMINATE IN A TERMINAL CABINET. REFER TO ARCHITECTURAL RCP FOR EXACT LOCATION.
3. SOUND SYSTEM TERMINAL CABINET. PROVIDE POWER RECEPTACLE AS REQUIRED BY SYSTEM MANUFACTURER.
4. TERMINAL CABINET FOR TERMINATION OF CABLES ASSOCIATED WITH ACCESS CONTROL SYSTEM. PROVIDE POWER RECEPTACLE AS REQUIRED BY SYSTEM MANUFACTURER.
5. PROVIDE AND INSTALL A PHOTOELECTRIC TYPE DUCT DETECTOR IN BOTH THE SUPPLY AND RETURN DUCTS. DETECTOR SHALL BE PROVIDED BY ELECTRICAL CONTRACTOR, INSTALLED BY MECHANICAL CONTRACTOR, AND WIRED INTO THE FIRE ALARM SYSTEM BY THE ELECTRICAL CONTRACTOR. DETECTOR SHALL BE SUPPLIED WITH ANY AND ALL REQUIRED CONTROL RELAY(S) OR CONTACT(S) IN ORDER TO AUTOMATICALLY TURN-OFF THE MECHANICAL UNIT UPON RECEIPT OF ALARM SIGNAL FROM EITHER DUCT SMOKE DETECTOR. PROVIDE NEW CONDUIT AND CONTROL WIRING AS REQUIRED FOR CONNECTION TO EXISTING FIRE ALARM SYSTEM.
6. FIRE ALARM REMOTE ANNUNCIATOR.
7. JUNCTION BOX FOR GAS SOLENOID VALVE. CONNECT TO FIRE ALARM SYSTEM.

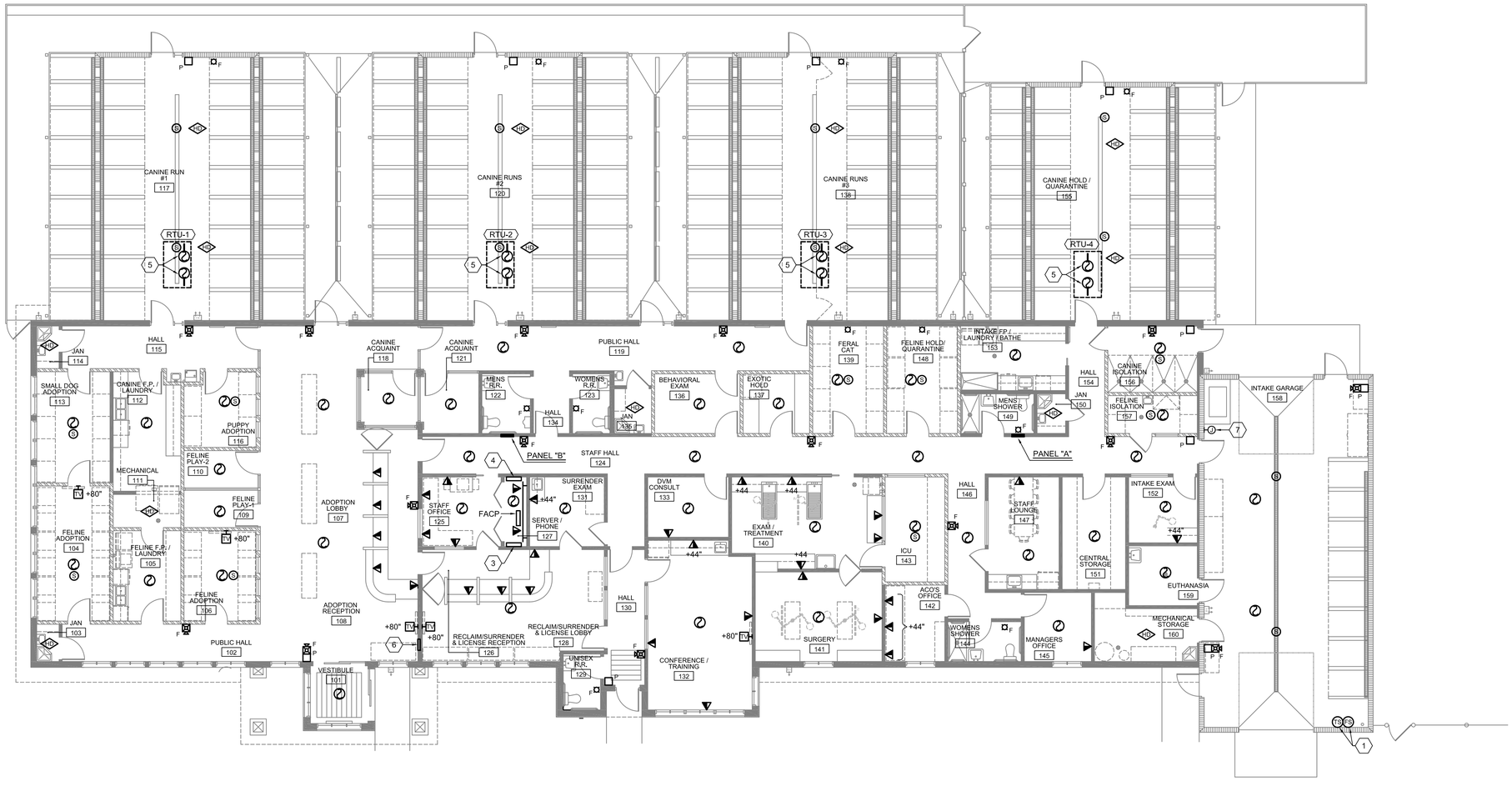

A1 SPECIAL SYSTEMS PLAN
1/8"=1'-0"

PROJECT NORTH

901 Lamberton Pl. NE
Albuquerque, NM 87107
Phone: (505) 858-0180
Fax: (505) 858-0111
Email: info@bdaarc.com

The documents transmitted herein are the sole Intellectual Property of BDA Architecture, P.C. Any use, reuse, or reproduction in any form without the express written consent of, and compensation to, BDA Architecture is a violation of federal law.

BDA

STATE OF NEVADA
DAVID A. DELLE
ELECTRICAL
22715
15016

CARSON CITY ANIMAL SERVICES

549 Airport Road
Carson City, Nevada 89701
City of Carson City

Copyright, 2015, BDA ARCHITECTURE PC.

SPECIAL SYSTEMS PLAN

REV.#	DATE	COMMENTS
REVISION: -		
REVISION: -		
REVISION: -		
REVISION: -		

REVIEWS	
INITIALS	BDA DSGN. REV.
	BDA TECH REV.

CCAS

PROJECT NO.: 1107
DRAWN: RP / RW / JKD
DATE: 2/27/2015

E103

OF

THE RESPONSE GROUP, INC.
An Electrical/Mechanical Engineering Corporation
11930 Menaul N.E. Suite 214
Albuquerque, New Mexico 87112
Phone:(505) 323-7629 Fax:(505) 323-7594
E-mail: theresponsegroup@trg-inc.net

Save Date: February 26, 2015 - 4:01 PM - Julie
Plot Date: February 26, 2015 - 5:11 PM
Drawing Name: F:\15016 Carson City Animal Services\15016 CADD\Constructs\Electrical\15016 - E103 - Special Systems Plan.dwg

KEYED NOTES

1. EXHAUST FAN SHALL CONNECT TO LIGHTING CIRCUIT AND BE CONTROLLED BY RELATED ROOM LIGHT SWITCH.
2. JUNCTION BOX FOR POWER CONNECTION TO BASEBOARD HEATER. CONTRACTOR SHALL MAKE FINAL TERMINATION AT UNIT.
3. JUNCTION BOX FOR POWER CONNECTION TO GAS SOLENOID VALVE. VERIFY EXACT LOCATION.
4. PROVIDE AND INSTALL A RED MUSHROOM-HEAD PUSHBUTTON FOR EMERGENCY-OFF FOR BOILER B-1. WIRE INTO POWER/CONTROL CIRCUIT AS REQUIRED TO DISCONNECT ALL POWER FROM BOILER WHEN PUSHBUTTON IS ACTIVATED. PROVIDE PERMANENT LABEL ON FACEPLATE. LABEL TO READ "EMERGENCY-OFF BOILER".
5. JUNCTION BOX FOR POWER CONNECTION TO BOILER. CONTRACTOR TO MAKE FINAL TERMINATION AT UNIT. VERIFY EXACT LOCATION.
6. 240V-30A-2P-3W PLUS SOLID NEUTRAL, FUSIBLE NEMA 1 ENCLOSURE DISCONNECT SWITCH. FUSE AS RECOMMENDED BY UNIT MANUFACTURER.
7. SINGLE POLE TOGGLE SWITCH WITH RED PILOT LIGHT FOR CONTROL OF EXHAUST FAN. PILOT LIGHT SHALL ILLUMINATE WHEN FAN IS ENERGIZED. PROVIDE PERMANENT LABEL ON FACEPLATE. LABEL TO READ, "EXHAUST FAN ON-OFF". VERIFY LOCATION PRIOR TO INSTALLATION.
8. PROVIDE AND INSTALL A 15 MINUTE "TWIST-TIMER". VERIFY LOCATION PRIOR TO INSTALLATION.
9. PROVIDE AND INSTALL A 15 MINUTE "TWIST-TIMER". TWIST-TIMER FOR "HIGH" SPEED CONTROL OF FAN.
10. 3/4" CONDUIT WITH PULLWIRE FOR INTERLOCK WITH MECHANICAL UNIT INDICATED FOR "LOW" SPEED CONTROL OF FAN.
11. 3/4" CONDUIT WITH PULLWIRE FOR INTERLOCK WITH MECHANICAL UNIT INDICATED.
12. EXTEND 3/4" CONDUIT WITH (3) #12 AND (1) #12 GROUND UP TO MECHANICAL UNIT INDICATED.

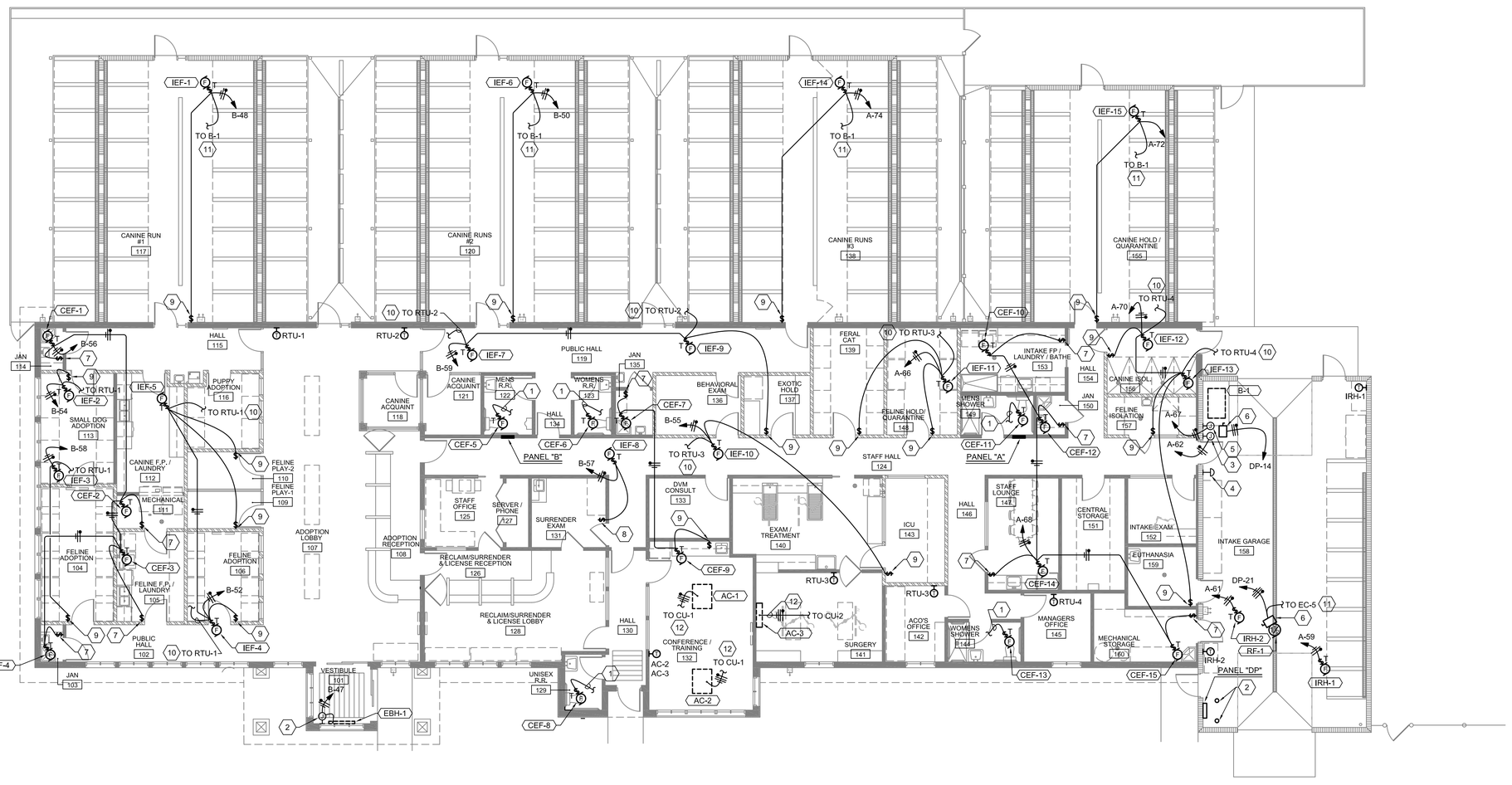

A1 POWER PLAN - MECHANICAL
1/8"=1'-0"

PROJECT NORTH

THE RESPONSE GROUP, INC.
An Electrical/Mechanical Engineering Corporation
11930 Menaul N.E. Suite 214
Albuquerque, New Mexico 87112
Phone:(505) 323-7629 Fax:(505) 323-7594
E-mail: theresponsegroup@trg-inc.net

901 Lamberton Pl. NE
Albuquerque, NM 87107
Phone: (505) 858-0180
Fax: (505) 858-0111
Email: info@bdaarc.com

The documents transmitted herein are the sole Intellectual Property of BDA Architecture, P.C. Any use, reuse, or reproduction in any form without the express written consent of, and compensation to, BDA Architecture is a violation of federal law.

BDA

STATE OF NEVADA
DAVID A. DUNCAN
ELECTRICAL
15016
2/27/15

CARSON CITY ANIMAL SERVICES

549 Airport Road
Carson City, Nevada 89701
City of Carson City

Copyright, 2015, BDA ARCHITECTURE PC.

POWER PLAN - MECHANICAL

REV.#	DATE	COMMENTS
REVISION:	-	
REVISION:	-	
REVISION:	-	
REVISION:	-	

REVIEWS	
INITIALS	
	BDA DSGN. REV.
	BDA TECH REV.

CCAS

PROJECT NO.: 1107
DRAWN: RP / RW / JKD
DATE: 2/27/2015

E104

OF

Save Date: February 26, 2015 - 4:01 PM - Julie
Plot Date: February 26, 2015 - 5:10 PM
Drawing Name: F:\15016 Carson City Animal Services\15016 CADD\Constructs\Electrical\15016 - E104 - Power Plan - Mechanical.dwg

KEYED NOTES

1. 240V-60A-3P-4W PLUS SOLID NEUTRAL, FUSIBLE, RAINTIGHT DISCONNECT SWITCH. FUSE AS RECOMMENDED BY UNIT MANUFACTURER. (4) #6 AND (1) #8 GROUND IN 1" CONDUIT.
2. 240V-30A-2P-3W PLUS SOLID NEUTRAL, FUSIBLE, RAINTIGHT DISCONNECT SWITCH. FUSE AS RECOMMENDED BY UNIT MANUFACTURER. (3) #10 AND (1) #10 GROUND IN 3/4" CONDUIT.
3. 240V-100A-3P-4W PLUS SOLID NEUTRAL, FUSIBLE, RAINTIGHT DISCONNECT SWITCH. FUSE AS RECOMMENDED BY UNIT MANUFACTURER. (4) #4 AND (1) #8 GROUND IN 1 1/4" CONDUIT.
4. 240V-60A-3P-4W PLUS SOLID NEUTRAL, FUSIBLE, RAINTIGHT DISCONNECT SWITCH. FUSE AS RECOMMENDED BY UNIT MANUFACTURER. (4) #8 AND (1) #10 GROUND IN 3/4" CONDUIT.
5. 240V-30A-2P-3W PLUS SOLID NEUTRAL, FUSIBLE, RAINTIGHT DISCONNECT SWITCH. FUSE AS RECOMMENDED BY UNIT MANUFACTURER. (3) #12 AND (1) #12 GROUND IN 3/4" CONDUIT.
6. 240V-30A-3P-4W PLUS SOLID NEUTRAL, FUSIBLE, RAINTIGHT DISCONNECT SWITCH. FUSE AS RECOMMENDED BY UNIT MANUFACTURER.
7. (4) #10 AND (1) #10 GROUND IN 3/4" CONDUIT.

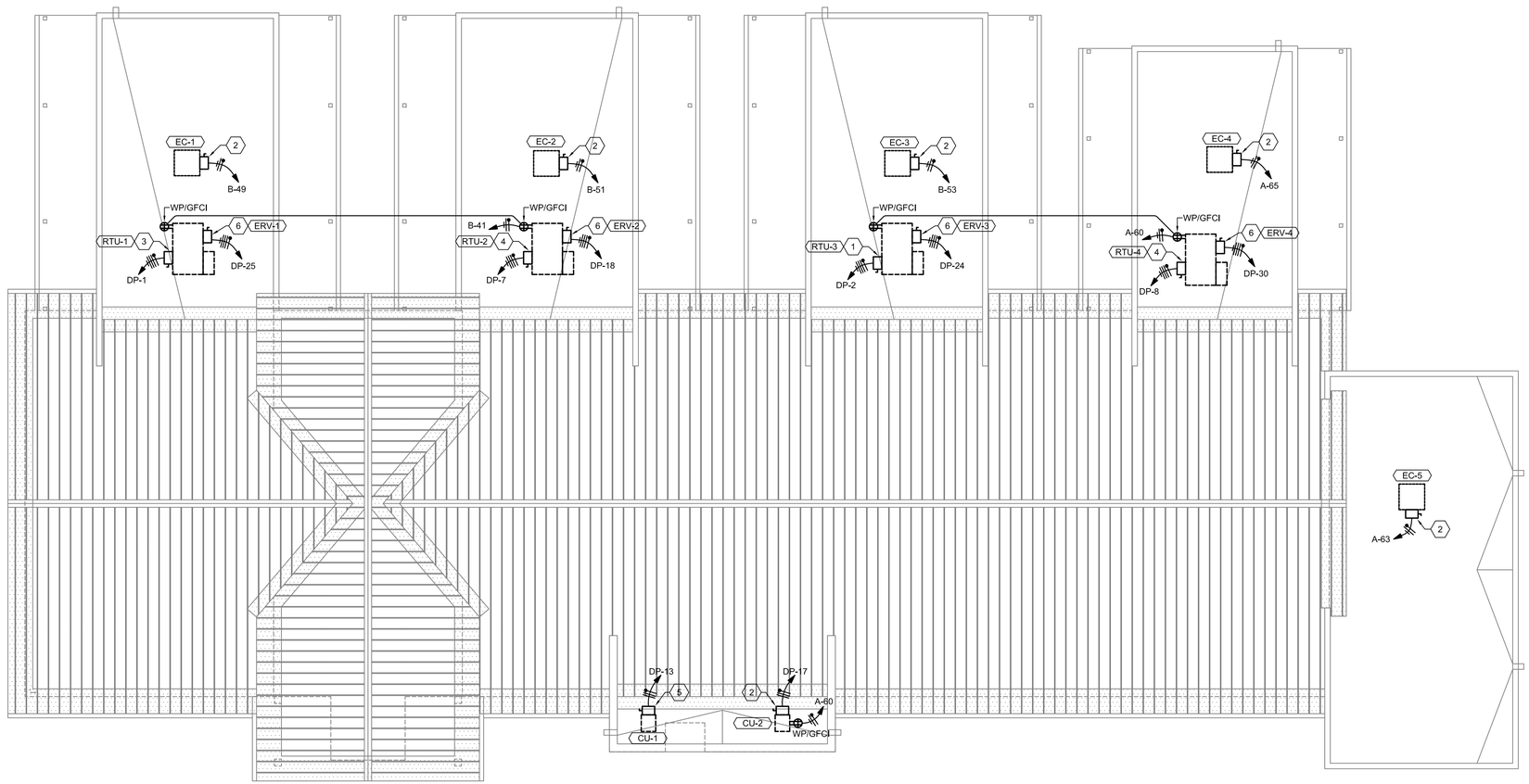

A1 ELECTRICAL ROOF PLAN
1/8"=1'-0"

PROJECT NORTH

THE RESPONSE GROUP, INC.
An Electrical/Mechanical Engineering Corporation
11930 Menaul N.E. Suite 214
Albuquerque, New Mexico 87112
Phone:(505) 323-7629 Fax:(505) 323-7594
E-mail: theresponsegroup@trg-inc.net

901 Lamberton Pl. NE
Albuquerque, NM 87107
Phone: (505) 858-0180
Fax: (505) 858-0111
Email: info@bdaarc.com

The documents transmitted herein are the sole Intellectual Property of BDA Architecture, P.C. Any use, reuse, or reproduction in any form without the express written consent of, and compensation to BDA Architecture is a violation of federal law.

BDA

STATE OF NEVADA
DAVID A. DALLAS
ELECTRICAL
2/27/15
15016

CARSON CITY ANIMAL SERVICES

549 Airport Road
Carson City, Nevada 89701
City of Carson City

Copyright, 2015, BDA ARCHITECTURE PC.

ELECTRICAL ROOF PLAN

REV.#	DATE	COMMENTS
REVISION: -		
REVISION: -		
REVISION: -		
REVISION: -		

REVIEWS	
INITIALS	BDA DSGN. REV.
	BDA TECH REV.

CCAS

PROJECT NO.: 1107
DRAWN: RP / RW / JKD
DATE: 2/27/2015

E105

OF

Save Date: February 26, 2015 - 4:01 PM - Julie
Plot Date: February 26, 2015 - 5:12 PM
Drawing Name: F:\15016 Carson City Animal Services\15016 CADD\Constructs\Electrical\15016 - E105 - Electrical Roof Plan.dwg

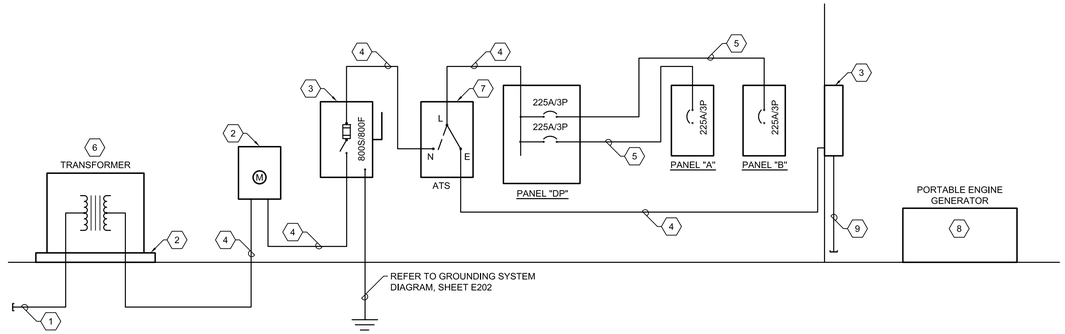

POWER RISER DIAGRAM

NOT TO SCALE

KEYED NOTES

1. 4" CONDUIT WITH PULLCORD. VERIFY EXACT SIZE AND TERMINATION REQUIREMENTS WITH NEVADA ENERGY UTILITY PRIOR TO INSTALLATION.
2. CONCRETE PAD AND METER ENCLOSURE PER NEVADA ENERGY UTILITY REQUIREMENTS.
3. 240V-800A-3P-4W PLUS SOLID NEUTRAL, FUSIBLE RAINTIGHT DISCONNECT SWITCH. FUSE AT 800 AMPS.
4. (2) 4" CONDUITS EACH WITH (4) #600 KCMIL AND (1) #2/0 GROUND.
5. (4) #4/0 AND (1) #2 GROUND IN 2 1/2" CONDUIT.
6. PAD MOUNT TRANSFORMER BY UTILITY COMPANY.
7. AUTOMATIC TRANSFER SWITCH SHALL BE EQUAL TO RUSSELECTRIC #RMTD 800-4-c-EF-1d-2a-2d-3c-5a-5d-6b-6e-7-8-9a-9b-12b-14a-14b-14ax.
8. PORTABLE ENGINE GENERATOR BY OWNER.
9. PROVIDE AND INSTALL (3) 4" CONDUIT THREADED NIPPLES WITH CAPS TO BOTTOM OF DISCONNECT SWITCH. PROVIDE CAPS ON BOTH INSIDE AND OUTSIDE OF DISCONNECT.

PANEL: "A" VOLTAGE: 120/208V-3Ø-4W MAINS: 225A AIC: 10,000
SOURCE: PANEL "DP" SKIRTS: N/A FEED: TOP MAIN BREAKER: 225A/3P MOUNTING: RECESSED

DESCRIPTION	BRKR	LOAD (VA)	CCT NO.	LOAD (VA) ØA	LOAD (VA) ØB	LOAD (VA) ØC	CCT NO.	LOAD (VA)	BRKR	DESCRIPTION
LIGHTS	20A/1P	633	1	991			2	358	20A/1P	LIGHTS - BLDG EXTERIOR
LIGHTS	20A/1P	470	3		1460		4	990	20A/1P	LIGHTS - BLDG EXTERIOR
LIGHTS	20A/1P	686	5			886	6	200	20A/1P	LIGHTS - BLDS SIGN
LIGHTS	20A/1P	470	7	870			8	400	20A/1P	LIGHTS - MONUMENT SIGN
RECEPTACLES - PARKING	20A/1P	600	9		950		10	350	20A/1P	LIGHTS - COVERED PARKING
RECEPTACLES - PARKING	20A/1P	600	11			1126	12	526	20A/1P	LIGHTS - PARKING LOT
RECEPTACLES - PARKING	20A/1P	600	13	1608			14	1008	20A/1P	GATE CONTROLLER
RECEPTACLES - PARKING	20A/1P	600	15		1608		16	1008	20A/1P	GATE CONTROLLER
RECEPTACLES - PARKING	20A/1P	600	17			1776	18	1176	20A/1P	OVERHEAD DOOR
RECEPTACLES - PARKING	20A/1P	600	19	1776			20	1176	20A/1P	OVERHEAD DOOR
RECEPTACLES - PARKING	20A/1P	600	21		1500		22	900	20A/1P	RECEPTACLES
RECEPTACLES - PARKING	20A/1P	600	23			1320	24	720	20A/1P	RECEPTACLES
RECEPTACLES - PARKING	20A/1P	600	25	1320			26	720	20A/1P	RECEPTACLES
RECEPTACLES - PARKING	20A/1P	600	27		1320		28	720	20A/1P	RECEPTACLES
FREEZER	20A/1P	1200	29			1920	30	720	20A/1P	RECEPTACLES
RECEPTACLES	20A/1P	720	31	2220			32	1500	20A/1P	RECEPTACLES
RECEPTACLES	20A/1P	540	33		2040		34	1500	20A/1P	RECEPTACLES
RECEPTACLES	20A/1P	540	35			1740	36	1200	20A/1P	REFRIGERATOR
RECEPTACLES	20A/1P	900	37	1980			38	1080	20A/1P	RECEPTACLES
RECEPTACLES	20A/1P	1500	39		2580		40	1080	20A/1P	RECEPTACLES
RECEPTACLES	20A/1P	1500	41			2040	42	540	20A/1P	RECEPTACLES
DISHWASHER	20A/1P	1000	43	1540			44	540	20A/1P	RECEPTACLES
U.C. REFRIGERATOR	20A/1P	500	45		1400		46	900	20A/1P	RECEPTACLES
CLOTHES WASHER	20A/1P	800	47			1700	48	900	20A/1P	RECEPTACLES
CLOTHES DRYER	30A	2375	49	3095			50	720	20A/1P	RECEPTACLES
	2P	2375	51		2915		52	540	20A/1P	RECEPTACLES
CLOTHES DRYER	30A	2375	53			3095	54	720	20A/1P	RECEPTACLES
	2P	2375	55	2875			56	500	20A/1P	MEDICAL GAS BUZZER
CLOTHES WASHER	20A/1P	800	57		1000		58	200	20A/1P	TIME CLOCK
UNIT IRH-2	20A/1P	312	59			852	60	540	20A/1P	RECEPTACLES - ON ROOF
UNIT IRH-2	20A/1P	312	61	512			62	200	20A/1P	GAS SOLENOID VALVE
UNIT EC-5	20A/1P	1656	63		1928		64	272	20A/1P	LIGHTS - STREET
UNIT EC-4	20A/1P	1656	65			2352	66	696	20A/1P	UNIT IEF-11
UNIT B-1	20A/1P	1860	67	2151			68	291	20A/1P	EXHAUST FANS
DISHWASHER	20A/1P	1000	69		2224		70	1224	20A/1P	UNITS IEF-12 & IEF-13
IRRIGATION CONTROLLER	20A/1P	500	71			1676	72	1176	20A/1P	UNIT IEF-15
SPARE	20A/1P	·	73	1176			74	1176	20A/1P	UNIT IEF-14
SPARE	20A/1P	·	75		1052		76	1052	20A/1P	LIGHTS - PARKING LOT
SPARE	20A/1P	·	77			.	78	·	20A/1P	SPARE
SPACE ONLY	1P	·	73				74	·	1P	SPACE ONLY
SPACE ONLY	1P	·	75		.		76	·	1P	SPACE ONLY
SPACE ONLY	1P	·	77			.	78	·	1P	SPACE ONLY
TOTAL LOAD (VA)				22,114	21,977	20,483				

TOTAL CONNECTED (KVA): 64.6 ESTIMATED DEMAND (KVA): . DOOR-IN-DOOR GROUND BUS

PANEL: "B" VOLTAGE: 120/208V-3Ø-4W MAINS: 225A AIC: 10,000
SOURCE: PANEL "DP" SKIRTS: N/A FEED: TOP MAIN BREAKER: 225A/3P MOUNTING: RECESSED

DESCRIPTION	BRKR	LOAD (VA)	CCT NO.	LOAD (VA) ØA	LOAD (VA) ØB	LOAD (VA) ØC	CCT NO.	LOAD (VA)	BRKR	DESCRIPTION
LIGHTS	20A/1P	520	1	1494			2	974	20A/1P	LIGHTS
LIGHTS	20A/1P	520	3		1389		4	869	20A/1P	LIGHTS
LIGHTS	20A/1P	520	5			1290	6	770	20A/1P	LIGHTS
LIGHTS	20A/1P	473	7	1505			8	1032	20A/1P	LIGHTS
EXAM LIGHTS	20A/1P	1000	9		1900		10	900	20A/1P	RECEPTACLES
EXAM LIGHTS	20A/1P	1000	11			1360	12	360	20A/1P	RECEPTACLES
RECEPTACLES	20A/1P	720	13	1080			14	360	20A/1P	RECEPTACLES
RECEPTACLES	20A/1P	720	15		1620		16	900	20A/1P	RECEPTACLES
RECEPTACLES	20A/1P	720	17			1080	18	360	20A/1P	RECEPTACLES
RECEPTACLES	20A/1P	720	19	1080			20	360	20A/1P	RECEPTACLES
RECEPTACLES	20A/1P	900	21		1800		22	900	20A/1P	RECEPTACLES
RECEPTACLES	20A/1P	720	23			1260	24	540	20A/1P	RECEPTACLES
RECEPTACLES	20A/1P	1080	25	1440			26	360	20A/1P	RECEPTACLES
RECEPTACLES	20A/1P	1500	27		2400		28	900	20A/1P	RECEPTACLES
RECEPTACLES	20A/1P	360	29			1860	30	1500	20A/1P	RECEPTACLES
U.C. REFRIGERATOR	20A/1P	500	31	1220			32	720	20A/1P	RECEPTACLES
DISHWASHER	20A/1P	1000	33		2500		34	1500	20A/1P	RECEPTACLES
CLOTHES WASHER	20A	645	35			1845	36	1200	20A/1P	RECEPTACLES
	2P	645	37	2145			38	1500	20A/1P	RECEPTACLES
RECEPTACLES	20A/1P	800	39		1800		40	1000	20A/1P	DISHWASHER
RECEPTACLES - ON ROOF	20A/1P	360	41			860	42	500	20A/1P	U.C. REFRIGERATOR
CLOTHES DRYER	30A	2375	43	3095			44	720	20A/1P	RECEPTACLES
	2P	2375	45		3275		46	900	20A/1P	RECEPTACLES
UNIT EBH-1	20A/1P	1512	47			2688	48	1176	20A/1P	UNIT IEF-1
UNIT EC-1	20A/1P	1656	49	2832			50	1176	20A/1P	UNIT IEF-6
UNIT EC-2	20A/1P	1656	51		2880		52	1224	20A/1P	UNITS IEF-4 / IEF-5
UNIT EC-3	20A/1P	1656	53			2352	54	696	20A/1P	UNIT IEF-2
UNIT IEF-10	20A/1P	1176	55	1434			56	258	20A/1P	EXHAUST FANS
UNIT IEF-8	20A/1P	528	57		1224		58	696	20A/1P	UNIT IEF-3
UNIT IEF-7 / IEF-9	20A/1P	1056	59			1556	60	500	20A/1P	FIRE ALARM PANEL
SPARE	20A/1P	·	61				62	·	20A/1P	SPARE
SPARE	20A/1P	·	63				64	·	20A/1P	SPARE
SPARE	20A/1P	·	65			.	66	·	20A/1P	SPARE
SPARE	20A/1P	·	67				68	·	20A/1P	SPARE
SPARE	20A/1P	·	69				70	·	20A/1P	SPARE
SPARE	20A/1P	·	71			.	72	·	20A/1P	SPARE
SPACE ONLY	1P	·	73				74	·	1P	SPACE ONLY
SPACE ONLY	1P	·	75				76	·	1P	SPACE ONLY
SPACE ONLY	1P	·	77			.	78	·	1P	SPACE ONLY
SPACE ONLY	1P	·	79				80	·	1P	SPACE ONLY
SPACE ONLY	1P	·	81				82	·	1P	SPACE ONLY
SPACE ONLY	1P	·	83			.	84	·	1P	SPACE ONLY
TOTAL LOAD (VA)				17,325	20,788	16,157				

TOTAL CONNECTED (KVA): 54.3 ESTIMATED DEMAND (KVA): . DOOR-IN-DOOR GROUND BUS

PANEL: "DP" VOLTAGE: 120/208V-3Ø-4W MAINS: 800A AIC: 22,000
SOURCE: . SKIRTS: N/A FEED: BOTTOM MAIN BREAKER: . MOUNTING: SURFACE

DESCRIPTION	BRKR	LOAD (VA)	CCT NO.	LOAD (VA) ØA	LOAD (VA) ØB	LOAD (VA) ØC	CCT NO.	LOAD (VA)	BRKR	DESCRIPTION
UNIT RTU-1	80A	7176	1	11,544			2	4368	50A	UNIT RTU-3
	/	7176	3		11,544		4	4368	/	
	3P	7176	5			11,544	6	4368	3P	
UNIT RTU-2	40A	3288	7	6576			8	3288	40A	UNIT RTU-4
	/	3288	9		6576		10	3288	/	
	3P	3288	11			6576	12	3288	3P	
UNIT CU-1 / AC-1 / AC-2	20A	1560	13	2278			14	718	20A	UNIT B1 PUMP
	2P	1560	15		2278		16	718	2P	
UNIT CU-2 / AC-3	30A	2600	17			3744	18	1248	20A	UNIT ERV-2
	2P	2600	19	3744			20	1248	/	
UNIT RF-1	20A	1144	21		2392		22	1248	3P	
	2P	1144	23			2392	24	1248	20A	
UNIT ERV-1	30A	2376	25	3624			26	1248	/	UNIT ERV-3
	/	2376	27		3624		28	1248	3P	
	3P	2376	29			3624	30	1248	20A	
CLOTHES DRYER	110A	10200	31	11448			32	1248	/	UNIT ERV-4
	/	10200	33		11448		34	1248	3P	
	3P	10200	35			10200	36	·	1P	SPACE ONLY
PANEL "A"	225A	22,114	37	39439			38	17,325	225A	PANEL "B"
	/	21,977	39		42765		40	20,788	/	
	3P	20,483	41			36634	42	16,151	3P	
TOTAL LOAD (VA)				78,653	80,627	74,714				

TOTAL CONNECTED (KVA): 234 ESTIMATED DEMAND (KVA): . DOOR-IN-DOOR GROUND BUS

LOAD SUMMARY - PANEL A

DESCRIPTION	
PANELBOARD "A" ESTIMATED DEMAND PER NEC 220	
MECHANICAL UNITS (10.6 KVA CONN)	10.6 KVA
DRYER (9.5 KVA CONN) AT 100%	9.5 KVA
RECEPTACLES (38.1 KVA CONN)	
FIRST 10 KVA AT 100%	10.0 KVA
REMAINING AT 50%	14.1 KVA
LIGHTING (6.4 KVA CONN) AT 100%	6.4 KVA
TOTAL ESTIMATED LOAD:	50.6 KVA
140 AMPERES AT 208Y/120V-3Ø-4W	
MINIMUM SERVICE CAPACITY =125% x TOTAL ESTIMATED LOAD	63.2 KVA
175 AMPERES AT 208Y/120V-3Ø-4W	
∴ MINIMUM RECOMMENDED SERVICE SIZE =	225 AMPS

LOAD SUMMARY - PANEL B

DESCRIPTION	
PANELBOARD "B" ESTIMATED DEMAND PER NEC 220	
MECHANICAL UNITS (. KVA CONN)	14.5 KVA
DRYER (4.8 KVA CONN) AT 100%	4.8 KVA
RECEPTACLES (27.4 KVA CONN)	
FIRST 10 KVA AT 100%	10.0 KVA
REMAINING AT 50%	8.7 KVA
LIGHTING (7.6 KVA CONN) AT 100%	7.6 KVA
TOTAL ESTIMATED LOAD:	45.6 KVA
127 AMPERES AT 208Y/120V-3Ø-4W	
MINIMUM SERVICE CAPACITY =125% x TOTAL ESTIMATED LOAD	57 KVA
159 AMPERES AT 208Y/120V-3Ø-4W	
∴ MINIMUM RECOMMENDED SERVICE SIZE =	225 AMPS

LOAD SUMMARY - PANEL DP

DESCRIPTION	
PANELBOARD "DP" ESTIMATED DEMAND PER NEC 220	
MECHANICAL UNITS (82.5 KVA CONN)	82.5 KVA
DRYER (30.6 KVA CONN) AT 100%	30.6 KVA
PANEL "A"	50.7 KVA
PANEL "B"	45.6 KVA
TOTAL ESTIMATED LOAD:	209.4 KVA
581 AMPERES AT 208Y/120V-3Ø-4W	
MINIMUM SERVICE CAPACITY =125% x TOTAL ESTIMATED LOAD	261.8 KVA
727 AMPERES AT 208Y/120V-3Ø-4W	
∴ MINIMUM RECOMMENDED SERVICE SIZE =	800 AMPS

THE RESPONSE GROUP, INC.
An Electrical/Mechanical Engineering Corporation
11930 Menaul N.E. Suite 214
Albuquerque, New Mexico 87112
Phone:(505) 323-7629 Fax:(505) 323-7594
E-mail: theresponsegroup@trg-inc.net

BDA
901 Lamberton Pl. NE
Albuquerque, NM 87107
Phone: (505) 858-0180
Fax: (505) 858-0111
Email: info@bdaarc.com

The documents transmitted herein are the sole Intellectual Property of BDA Architecture, P.C. Any use, reuse, or reproduction in any form without the express written consent of, and compensation to BDA Architecture is a violation of federal law.

STATE OF NEVADA
DAVID GOLLE
ELECTRICAL
22715
15016

CARSON CITY ANIMAL SERVICES

549 Airport Road
Carson City, Nevada 89701
City of Carson City

Copyright, 2015, BDA ARCHITECTURE PC.

POWER RISER DIAGRAM AND PANEL SCHEDULES

REV.#	DATE	COMMENTS
REVISION: -		
REVISION: -		
REVISION: -		
REVISION: -		

REVIEWS	
INITIALS	
	BDA DSGN. REV.
	BDA TECH REV.

CCAS
PROJECT NO.: 1107
DRAWN: RP / RW / JKD
DATE: 2/27/2015

E201
OF

Save Date: February 26, 2015 - 4:01 PM - Julie
Plot Date: February 26, 2015 - 5:03 PM
Drawing Name: F:\15016 Carson City Animal Services\15016 CADD\Constructs\Electrical\15016 - E201 - Riser Diagram & Panel Schedules.dwg

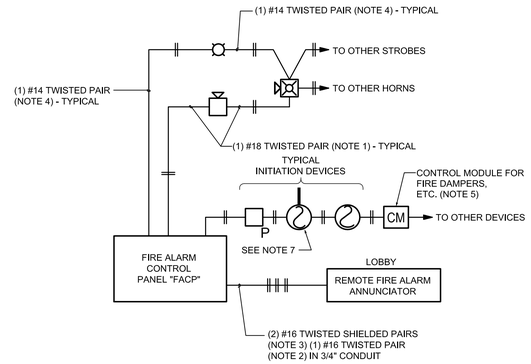

TYPICAL FIRE ALARM SYSTEM SCHEMATIC DIAGRAM

NOT TO SCALE SEE NOTE 6.

FIRE ALARM SCHEMATIC DIAGRAM NOTES

1. EQUAL TO WEST PENN #975 CABLE.
2. EQUAL TO WEST PENN #990 CABLE.
3. EQUAL TO WEST PENN #991 CABLE.
4. EQUAL TO WEST PENN #994 CABLE.
5. FIRE SMOKE DAMPERS SHALL BE WIRED TO COMMON CIRCUIT AND CONTROLLED BY ONE CONTROL MODULE.
6. CABLING FOR VARIOUS TYPES OF DEVICES MAY BE ROUTED IN COMMON CONDUIT(S). ALL CABLING SHALL BE NEW. ALL SIGNALING DEVICES AND FIRE/SMOKE DAMPERS SHALL BE ACTIVATED IN ALARM CONDITION.
7. DUCT DETECTORS PROVIDED AND WIRED BY DIVISION 16, INSTALLED BY DIVISION 15. REFER TO MECHANICAL PLANS FOR LOCATIONS.

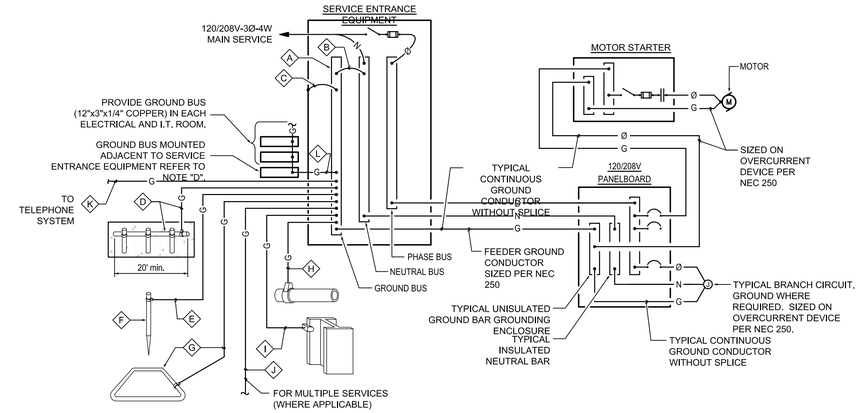

GROUNDING SYSTEM DIAGRAM

NOT TO SCALE

GROUNDING SYSTEM GENERAL NOTES

A. THE GROUNDING ELECTRODE SYSTEM SHALL CONSIST OF ITEMS A B C D E F AND G, WHERE APPLICABLE.

B. ITEMS H I AND J MUST BE BONDED TOGETHER AND TO THE GROUNDING ELECTRODE SYSTEM WHEN THEY ARE PRESENT.

C. ITEM D, CONCRETE ENCASED ELECTRODE (UFER) SHALL HAVE UFER SUPPORT CONSISTING OF 5/8" x 10' COPPER GROUND ROD CUT INTO 2' SECTIONS AND DRIVEN FOR SUPPORT OF UFER CONDUCTOR. ONLY COPPER TO COPPER CONNECTIONS ARE ACCEPTABLE. DO NOT USE RE-BAR FOR UFER SUPPORT. (THIS IS TO AVOID THE HARMFUL EFFECTS OF DISSIMILAR METALS IN CONTACT.) A U.L. LISTED COPPER TO RE-BAR CLAMP (SUCH AS GRAVES "JONES BOND" SYSTEM) IS AN APPROVED ALTERNATIVE.

D. ITEM L, PER NEC 250.94, PROVIDE AND INSTALL A LISTED INTERSYSTEM BONDING TERMINATION FOR CONNECTING BONDING CONDUCTORS REQUIRED FOR OTHER SYSTEMS EXTERNAL TO ADJACENT SERVICE EQUIPMENT OR METERING EQUIPMENT ENCLOSURE. INTERSYSTEM BONDING TERMINATION SHALL CONSIST O SET OF TERMINALS WITH CAPACITY FOR CONNECITON OF NOT LESS THAN THREE INTERSYSTEM BONDING CONDUCTORS.

E. THIS DETAIL IS PROVIDED IN ACCORDANCE WITH THE NATIONAL ELECTRICAL CODE, ARTICLE 250, PERTAINING TO THE ``GROUNDING ELECTRODE SYSTEM".

F. ALL SPLICING SHALL BE ACCOMPLISHED VIA EXOTHERMIC WELD (CAD-WELD) ONLY.

G. ALL CONDUCTOR SIZING INDICATED ON THE GROUNDING SCHEDULE ARE FOR COPPER CONDUCTORS. ALUMINUM IS NOT PERMITTED.

H. ANY VARIANCES FROM THIS DIAGRAM AND ASSOCIATED SCHEDULE AND NOTES MUST BE REQUESTED AND APPROVED IN WRITING PRIOR TO INSTALLATION.

I. ALL INSTALLATIONS SHALL COMPLY WITH THE LATEST ADOPTED EDITION OF N.E.C. ARTICLE 250 (ALL SUBPARAGRAPHS) AND ALL STATE AND LOCAL REQUIREMENTS.

J. THE GROUNDING SYSTEM SHALL PROVIDE LESS THAN (4) FOUR OHMS RESISTANCE TO GROUND AT THE SERVICE CONNECTION. THE RESULTS SHALL BE VERIFIED BY AN INDEPENDENT TESTING AGENCY VIA GROUND TEST (FALL-OF-POTENTIAL) AND SUBMITTED TO ELECTRICAL ENGINEER UPON COMPLETION OF PROJECT.

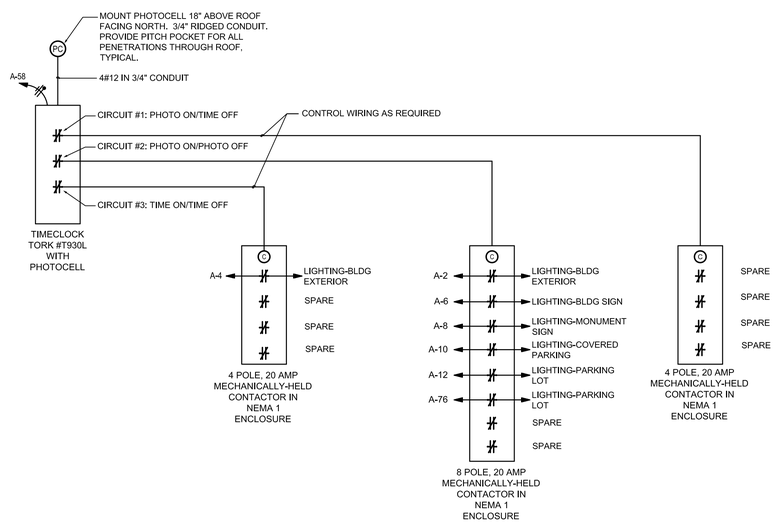

EXTERIOR BUILDING LIGHTING CONTROL DIAGRAM

TIME ON AND/OR TIME OFF SETTINGS SHALL BE SET TO
OWNER'S REQUIREMENTS.

GROUNDING SCHEDULE

	A FACTORY INSTALLED GROUND BUS BAR	B INTEGRATED BUS BAR MAIN BOND JUMPER	C INTEGRATED BUS BAR CASE BOND JUMPER	D CONCRETE ENCASED ELECTRODE (UFER)	E GROUNDING ELECTRODE CONDUCTOR TO ROD, PIPE OR PLATE	F CU OR CU-CLAD STEEL GROUND ROD	G COPPER GROUND RING CONDUCTOR	H METALLIC PIPING BONDING CONDUCTOR	I BUILDING STEEL BONDING CONDUCTOR	J MULTIPLE SERVICE BONDING CONDUCTOR	K TELEPHONE SYSTEM GROUNDING CONDUCTOR	L INTERSYSTEM BONDING
CODE REFERENCE / AMPACITY		N.E.C. 250.102(C)	N.E.C. 250.102(C)	N.E.C. 250.52(A)(3) 250.66(B)	N.E.C. 250.52(A)(5) 250.52(A)(7) 250.66(A)	N.E.C. 250.52(A)(5)	N.E.C. 250.52(A)(4) 250.66(C)	N.E.C. 250.52(A)(1) 250.66	N.E.C. 250.50(A)(2) 250.66	N.E.C. 250.66		N.E.C. 250.94
200 AMP	SHALL BE SIZED TO ACCOMMODATE ALL GROUND WIRE LUGS AS INDICATED ON GROUNDING DIAGRAM AND/OR REFERENCED ELSEWHERE ON PLANS OR SPECIFICATIONS	#4	#4	#4	#6	5/8"x8'	#2	#4	#4	#4	#6	#6
225 AMP		#2	#2	#4	#6	5/8"x8'	#2	#2	#2	#2	#6	#6
400 AMP		#1/0	#1/0	#4	#6	5/8"x8'	#1/0	#1/0	#1/0	#1/0	#6	#6
600 AMP		#2/0	#2/0	#4	#6	5/8"x8'	#2/0	#2/0	#2/0	#2/0	#6	#6
800 AMP		#3/0	#3/0	#4	#6	5/8"x8'	#2/0	#2/0	#2/0	#2/0	#6	#6
1000 AMP		#3/0	#3/0	#4	#6	5/8"x8'	#3/0	#3/0	#3/0	#3/0	#6	#6
1200 AMP		250kcMIL	250kcMIL	#4	#6	5/8"x8'	#3/0	#3/0	#3/0	#3/0	#6	#6
1600 AMP		350kcMIL	350kcMIL	#4	#6	5/8"x8'	#3/0	#3/0	#3/0	#3/0	#6	#6
2000 AMP		400kcMIL	400kcMIL	#4	#6	5/8"x8'	#3/0	#3/0	#3/0	#3/0	#6	#6
2500 AMP		500kcMIL	500kcMIL	#4	#6	5/8"x8'	#3/0	#3/0	#3/0	#3/0	#6	#6
3000 AMP		500kcMIL	500kcMIL	#4	#6	5/8"x8'	#3/0	#3/0	#3/0	#3/0	#6	#6

THE RESPONSE GROUP, INC.
An Electrical/Mechanical Engineering Corporation
11930 Menaul N.E. Suite 214
Albuquerque, New Mexico 87112
Phone:(505) 323-7629 Fax:(505) 323-7594
E-mail: theresponsegroup@trg-inc.net

901 Lamberton Pl. NE
Albuquerque, NM 87107
Phone: (505) 858-0180
Fax: (505) 858-0111
Email: info@bdaarc.com

The documents transmitted herein are the sole Intellectual Property of BDA Architecture, P.C. Any use, reuse, or reproduction in any form without the express written consent of, and compensation to, BDA Architecture is a violation of federal law.

BDA

STATE OF NEVADA
DAMIAN K. DELLE
ELECTRICAL
15016
2/27/15

CARSON CITY ANIMAL SERVICES

549 Airport Road
Carson City, Nevada 89701
City of Carson City

Copyright. 2015, BDA ARCHITECTURE PC.

ELECTRICAL DETAILS

REV.#	DATE	COMMENTS
-		
-		
-		
-		

REVISION:
REVISION:
REVISION:
REVISION:

REVIEWS	
INITIALS	BDA DSGN. REV.
	BDA TECH REV.

CCAS

PROJECT NO.: 1107
DRAWN: RP / RW / JKD
DATE: 2/27/2015

E202

OF

Save Date: February 26, 2015 - 4:01 PM - Julie
Plot Date: February 26, 2015 - 5:04 PM
Drawing Name: F:\15016 Carson City Animal Services\15016 CADD\Constructs\Electrical\15016 - E202 - Electrical Legend & Sched-Details.dwg

ELECTRICAL SYMBOL LEGEND

SYMBOL	DESCRIPTION
	WALL OUTLET AND SURFACE MOUNTED FIXTURE
	CEILING OUTLET AND RECESSED FIXTURE
	WALL OUTLET AND RECESSED FIXTURE
	POLE MOUNTED FIXTURE
	FLUORESCENT OUTLET AND FIXTURE
	EGRESS LIGHTING BATTERY PACK
	SINGLE FACED EXIT SIGN WITH ARROWS AS INDICATED
	DOUBLE FACED EXIT SIGN WITH ARROWS AS INDICATED
	SINGLE POLE SWITCH, FLUSH MOUNTED 48" A.F.F.
3	THREE WAY SWITCH, FLUSH MOUNTED 48" A.F.F.
4	FOUR WAY SWITCH, FLUSH MOUNTED 48" A.F.F.
D	SINGLE POLE SLIDE-TO-OFF, DIMMING CONTROLLER, LUTRON #N-600 OR APPROVED EQUAL, FLUSH MOUNTED 48" A.F.F.
EC	EVAPORATIVE COOLER SWITCH, ONE "HI-OFF-LOW" FOR FAN AND ONE "ON-OFF" FOR PUMP. FURNISH WITH ENGRAVED NAMEPLATE. FLUSH MOUNTED 48" A.F.F.
T	THERMAL SWITCH, WEATHERPROOF IF INSTALLED OUTSIDE
	DUPLEX CONVENIENCE OUTLET, 18" A.F.F.
WP	WEATHERPROOF DUPLEX CONVENIENCE OUTLET, 18" A.F.F.
GFCI	DUPLEX CONVENIENCE OUTLET, GROUND FAULT CIRCUIT INTERRUPTER, 18" A.F.F.
	QUADPLEX CONVENIENCE OUTLET, 18" A.F.F.
GFCI	QUADPLEX CONVENIENCE OUTLET, GROUND FAULT CIRCUIT INTERRUPTER, 18" A.F.F.
	FLUSH CEILING MOUNTED DUPLEX CONVENIENCE OUTLETS
	SPECIAL PURPOSE RECEPTACLE, AS NOTED ON PLANS, 18" A.F.F.
	JUNCTION BOX INSTALLED ABOVE LAY-IN CEILING WITH FLEXIBLE CONDUIT CONNECTION TO LAY-IN FIXTURES. MAXIMUM 4'-0" LENGTH OF CONDUIT, WITH REQUIRED CONDUCTORS ALONG WITH GREEN GROUND CONDUCTOR
	JUNCTION BOX FLUSH IN WALL, HEIGHT AS INDICATED ON DRAWINGS, WITH CONNECTION TO EQUIPMENT
	BRANCH CIRCUIT OR CONDUIT INSTALLED UNDERGROUND OR UNDER FLOOR
P2-2,4	HOMERUN TO PANELBOARD WITH BRANCH CIRCUIT NUMBERS INDICATED
	VOICE/DATA OUTLET, UP 18" A.F.F. UNLESS OTHERWISE NOTED. 3/4" CONDUIT MINIMUM WITH PULLCORD STUB-UP ABOVE ACCESSIBLE CEILING SPACE (2 GANG BOX, SINGLE GANG MUD RING)
TV	TELEVISION OUTLET FLUSH IN WALL, 18" A.F.F. 3/4" CONDUIT WITH PULLCORD STUBBED INTO ACCESSIBLE CEILING SPACE
S	SPEAKER FLUSH IN CEILING
P	FIRE ALARM MANUAL PULLSTATION, 48" A.F.F.
	FIRE ALARM AUDIO/VISUAL DEVICE, 80" A.F.F.
	FIRE ALARM SMOKE DETECTOR, PHOTOELECTRIC TYPE
HD	FIRE ALARM HEAT DETECTOR
TS	FIRE ALARM TAMPER SWITCH
FS	FIRE ALARM FLOW SWITCH
	MOTOR CONNECTION FOR FRACTIONAL HP MOTOR (1/3 HP OR LESS). PROVIDE THERMAL OVERLOAD SWITCH (WEATHERPROOF IF OUTSIDE) ADJACENT TO MOTOR UNLESS SWITCH IS SHOWN ELSEWHERE ON PLANS
	FUSED DISCONNECT SWITCH, FUSE, POLES AND RATING AS INDICATED OR AS REQUIRED, NEMA 3R IF INSTALLED OUTSIDE
T	TRANSFORMER, DRY TYPE, SIZE AS INDICATED
RTU-1	MECHANICAL UNIT
T	THERMOSTAT(M), 48" A.F.F.
	120V PANELBOARD, REFER TO PANEL SCHEDULE
	SPECIAL PURPOSE CABINET, AS INDICATED ON DRAWINGS
	3/4" PLYWOOD TELEPHONE BACKBOARD WITH TWO COATS OF GRAY INSULATING PAINT
	SWITCH
	FUSE(S)
	CIRCUIT BREAKER
WP	WEATHERPROOF (NEMA 3R)
(M)	MECHANICAL (FURNISHED UNDER DIVISION 15)
A.F.F.	ABOVE FINISHED FLOOR
U.N.O.	UNLESS NOTED OTHERWISE

NOTES:
- LIGHTING FIXTURES ARE OF TYPE AS INDICATED ON LIGHT FIXTURE SCHEDULE U.N.O.
- MOUNTING HEIGHTS FOR DEVICES CALLED OUT AT 18" A.F.F. ARE TO THE BOTTOM OF THE DEVICE UNLESS OTHERWISE NOTED.
- MOUNTING HEIGHTS FOR DEVICES CALLED OUT AT 48" A.F.F. ARE TO THE TOP OF THE DEVICE UNLESS OTHERWISE NOTED.
- ANY SPECIFIC DETAILS ABOVE (MOUNTING HEIGHTS, PART NUMBERS, CONNECTION METHODS, ETC.) MAY BE MODIFIED OR REPLACED BY INFORMATION ON PLANS, SCHEDULES, DETAILS, RISERS, ETC. DETAILS NOT SPECIFICALLY MODIFIED REMAIN AS GIVEN ABOVE.

LIGHT FIXTURE SCHEDULE

TYPE	FIXTURE DESCRIPTION	LAMPS	MOUNTING
A	2'x4' RECESSED STATIC TROFFER, LED, 3500 LUMENS, ACRYLIC PRISMATIC LENS, 120 VOLT NICOR #T3C-24-MV-35	1-50W LED 3500°K	RECESSED T-GRID
B	2'x4' RECESSED STATIC TROFFER, LED, 3500 LUMENS, ACRYLIC PRISMATIC LENS, TRIPLE GASKETING, 120 VOLT NICOR #T3C-24-MV-35-GASKETED 3-WAY	1-50W LED 3500°K	RECESSED T-GRID
C	1'x4' RECESSED STATIC TROFFER, LED, 3500 LUMENS, ACRYLIC PRISMATIC LENS, TRIPLE GASKETING, 120 VOLT NICOR #T3C-14-MV-35	1-40W LED 3500°K	RECESSED T-GRID
D	4FT SURFACE FIXTURE, LED, 4700 LUMENS, WET LISTED, 120 VOLT COLUMBIA #LXEP4-35-ML-DCA-E-U	1-47W LED 3500°K	CEILING SURFACE
E	2FT WALL BRACKET, LED, 800 LUMENS PER FOOT, 120 VOLT AXIS LIGHTING #PRWWLED-B2-800-35-S-2-AP-120-D-1	1-21W LED	WALL ABOVE MIRROR
F	RECESSED DOWNLIGHT, LED, 1200 LUMENS, 120 VOLT NICOR #DLR56-2712-120-3K-WH	1-17W LED 3000°K	RECESSED
G	RECESSED DOWNLIGHT, LED, DIMMING, 1664 LUMENS, 120 VOLT CREE #KR6-20L-35K-120V-10V-KR6T-SSGC-FF	1-30W LED 3500°K	RECESSED
H	CEILING SURFACE DRUM, LED, 900 LUMENS, 120 VOLT NICOR #DLS56-2009-120-4K-WH	1-15W LED 4000°K	CEILING SURFACE
K	PENDANT LIGHT, LED, 120 VOLT BARBICAN #16-0424-LF1075-10"-SM-HTO-T7206-BA-LED72-120V	1-72W LED 3500°K	PENDANT SEE ARCH.
L	PENDANT LIGHT, LED (100W EQUIVALENT) WET LISTED, 120 VOLT PROGRESS LIGHTING #P6514-31	1-18W LED 3500°K	PENDANT SEE ARCH.
M	INTERIOR WALL SCONCE, LED, 120 VOLT BARBICAN #16-3813-WM-OA-LF1075-T7206-WHT-LED20-120V	1-20W LED 3500°K	WALL MOUNT SEE ARCH.
N	EXTERIOR WALL PACK, LED, 960 LUMENS, BRONZE FINISH, WET LISTED, 120 VOLT TERON LIGHTING #CRNW-L133.6-120-CGL-TB-51K	1-45W LED 5100°K	WALL MOUNT SEE ARCH.
N2	EXTERIOR WALL PACK, LED, 960 LUMENS, BLACK FINISH, EMERGENCY BATTERY, WET LISTED, 120 VOLT TERON LIGHTING #CRNW-L133.6-120-CGL-TB-51K-EB	1-45W LED 5100°K	WALL MOUNT SEE ARCH.
N3	EXTERIOR DECORATIVE LIGHT, LED, (100W EQUIVALENT), WET LISTED, 120 VOLT PROGRESS #P6064-31	1-18W LED 3500°K	WALL MOUNT SEE ARCH.
P	RECESSED DOWNLIGHT, LED, 1100 LUMENS, LENS, WET LISTED, EMERGENCY BATTERY, 120 VOLT FOCAL POINT #FL6D-RO-11LED-40K-120-LD1-T-EM/L6-RD-RL-CD-NP	1-16W LED 4000°K	RECESSED
V1	POLE MOUNTED FIXTURE, LED, SINGLE HEAD, TYPE IV DISTRIBUTION, 23FT SQUARE STRAIGHT STEEL POLE, WP/GFCI DUPLEX RECEPTACLE, BRONZE FINISH, UNIVERSAL VOLTAGE CREE #ARE-EDG-4MP-DA-16-E-UL-BZ-525 (HEAD) SPAULDING #SSS-23-40-1-AX-DB-Q18 (POLE)	1-263W LED 5700°K	REFER TO POLE BASE DETAIL THIS SHEET
V2	POLE MOUNTED FIXTURE, LED, SINGLE HEAD, TYPE V DISTRIBUTION, 23FT SQUARE STRAIGHT STEEL POLE, WP/GFCI DUPLEX RECEPTACLE, BRONZE FINISH, UNIVERSAL VOLTAGE CREE #ARE-EDG-5M-DA-16-E-UL-BZ-525 (HEAD) SPAULDING #SSS-23-40-1-AX-DB-Q18 (POLE)	1-263W LED 5700°K	REFER TO POLE BASE DETAIL THIS SHEET
W	4FT VAPOR-TITE FIXTURE, LED, 4700 LUMENS, WET LISTED, 120 VOLT COLUMBIA #LXEP4-50-ML-DCA-E-U	1-50W LED 5000°K	SURFACE MOUNT
Z	SURFACE MOUNT SIGN LIGHT, LED, TWO HEADS, 120 VOLT BASELITE #2K2-41-E33-10WLED-5K	1-10W LED 5000°K PER HEAD	SURFACE MOUNT SEE ARCH.
AA	POLE MOUNTED FIXTURE, LED, SINGLE HEAD, TYPE III DISTRIBUTION, 28'-6" SQUARE STRAIGHT STEEL POLE, 15 FT ARM, BLACK FINISH, UNIVERSAL VOLTAGE CREE #STR-LWY-3M-HT-12-D-UL-BK-700-HL-PHOTOCELL (HEAD) POLE AND ARM SHALL MATCH CITY APPROVED STANDARDS.	1-272W LED 6000°K	REFER TO POLE BASE DETAILS THIS SHEET
	EMERGENCY EGRESS LIGHT FIXTURE WITH BATTERY BACK-UP, 120 VOLT DUAL-LITE #LZ2-03L	WITH UNIT	WALL MOUNT
	EXIT SIGN WITH BATTERY BACK-UP, 120 VOLT DUAL-LITE #LXURWE	WITH UNIT	UNIVERSAL
X	EXIT SIGN WITH BATTERY BACK-UP, WET LISTED, 120 VOLT DUAL-LITE #LN4XRWE	WITH UNIT	UNIVERSAL
	COMBINATION EXIT SIGN / EMERGENCY EGRESS LIGHT FIXTURE WITH BATTERY BACK-UP, 120 VOLT DUAL-LITE #HCXURW	WITH UNIT	WALL MOUNT

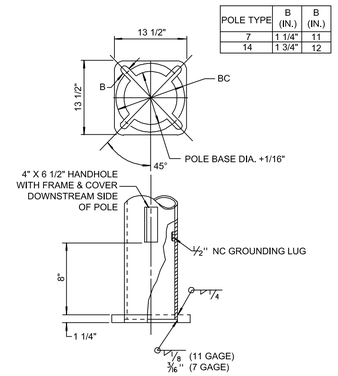

POLE TYPE	B (IN.)	B (IN.)
7	1 1/4"	11
14	1 3/4"	12

FIXTURE TYPE "AA" BASE PLATE

NOT TO SCALE (NOT APPLICABLE WHEN SAFETY BASES REQUIRED)

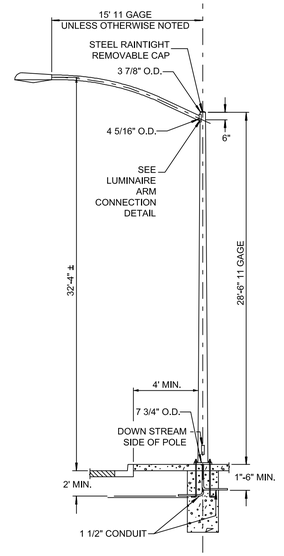

FIXTURE TYPE "AA" DETAIL

NOT TO SCALE

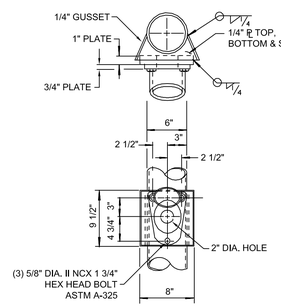

FIXTURE TYPE "AA" LUMINAIRE ARM CONNECTION

NOT TO SCALE

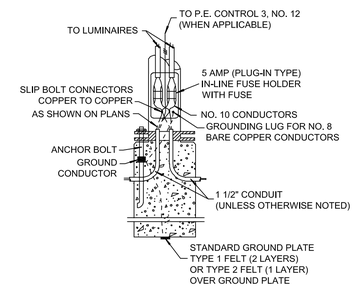

FIXTURE TYPE "AA" WIRING DIAGRAM

NOT TO SCALE

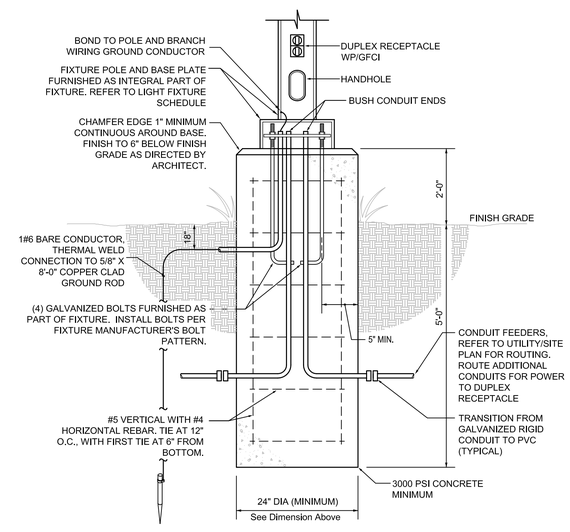

FIXTURE TYPES "V1" AND "V2" MOUNTING DETAIL

NOT TO SCALE

FIXTURE TYPE "AA" NOTES

DESIGN CRITERIA

AASHTO STANDARD SPECIFICATIONS FOR STRUCTURAL SUPPORTS FOR HIGHWAY SIGNS, LUMINARIES AND TRAFFIC SIGNALS, 4TH EDITION DATED 2001 AND CURRENT INTERIMS (EXCLUDING SECTION 11: FATIGUE DESIGN).

BASIC WIND SPEED = 90 MPH

GALVANIZING

1. POLES SHALL BE GALVANIZED AS PER ASTM A-123. HARDWARE SHALL BE GALVANIZED AS PER ASTM A-153.

STEEL SIGNAL AND LUMINAIRE ARMS

1. THE LAST 3" OF THE LUMINAIRE ARM SHALL BE STRAIGHT AND HORIZONTAL WITH LUMINAIRE ATTACHED.
2. CONNECTION BETWEEN ARMS AND POLES SHALL BE MADE BY MEANS OF A RAINTIGHT SOCKET OR A DESIGN PERMITTING SIMPLE REMOVAL OF THE ARMS.

ANCHOR BOLTS

1. PROVIDE (4) ASTM A-307 ANCHOR BOLTS, (8) ASTM A-563 HEAVY HEX NUTS, AND (8) ASTM F-436 HARDENED STEEL WASHERS FOR EACH POLE.
2. THREADS MAY BE CUT OR ROLLED, BOLTS SHALL BE GALVANIZED OR PLATED AFTER THREADS ARE FORMED. EACH BOLT SHALL BE PROVIDED WITH 6" OF THREADS.
3. WHEN USING A SAFETY BASE, ANCHOR BOLTS SHALL NOT EXTEND ABOVE THE SLIP BOLT GASKET.

STEEL POLES

1. BASE COVERS ARE REQUIRED ON ALL POLES EXCEPT WHERE SAFETY BASE IS SPECIFIED.
2. A REDUCED GAGE FOR SHAFT OF POLE WILL BE ACCEPTABLE ABOVE SIGNAL ARM ATTACHMENT.

WELDS

1. LONGITUDINAL WELDS BY SUBMERGED ARC OR ERW CIRCUMFERENTIAL BUTT WELDS SHALL HAVE PERMANENT BACKUP RINGS. ALL EXPOSED BUTT WELDS SHALL BE GROUND FLUSH.
2. FOR WELD SIZES NOT SHOWN, USE MINIMUM SIZE WELD AS SPECIFIED BY THE LATEST WELDING CODE.
3. BREAK ALL SHARP EDGES FOR WIRE PROTECTION.

FOUNDATIONS

1. AT LOCATIONS BEHIND CURB, ALL SIGNAL AND LIGHTING POLES SHALL BE LOCATED AT THE BACK EDGE OF SIDEWALK OR AT THE R/W LINE, TO OBTAIN A MINIMUM SETBACK DISTANCE OF 5' BEHIND THE BACK EDGE OF CURB TO CENTER OF POLE.
2. AT LOCATIONS WITHOUT CURB, POLES SHALL BE PLACED A MINIMUM DISTANCE OF 6' FROM SHOULDER OR A MINIMUM OF 10' FROM TRAVEL WAY, WHICHEVER IS GREATER.

SAFETY BASES

1. FIXTURE TYPE "AA" POLES SHALL REQUIRE SAFETY BASE ASSEMBLIES.

POLE AND ARM

1. BOTH POLE AND ARM SHALL MATCH CARSON CITY APPROVED STANDARDS .

THE RESPONSE GROUP, INC.
An Electrical/Mechanical Engineering Corporation
11930 Menaul N.E. Suite 214
Albuquerque, New Mexico 87112
Phone:(505) 323-7629 Fax:(505) 323-7594
E-mail: theresponsegroup@trg-inc.net

901 Lamberton Pl. NE
Albuquerque, NM 87107
Phone: (505) 858-0180
Fax: (505) 858-0111
Email: info@bdaarc.com

The documents transmitted herein are the sole Intellectual Property of BDA Architecture, P.C. Any use, reuse, or reproduction in any form without the express written consent of, and compensation to BDA Architecture is a violation of federal law.

BDA

STATE OF NEVADA
DAVID A. BOYLE
ELECTRICAL
15016
2/27/15

CARSON CITY ANIMAL SERVICES
549 Airport Road
Carson City, Nevada 89701
City of Carson City
Copyright, 2015, BDA ARCHITECTURE PC.

ELECTRICAL LEGEND, SCHEDULES AND DETAILS

REV.#	DATE	COMMENTS
REVISION: -		
REVISION: -		
REVISION: -		
REVISION: -		

REVIEWS	
INITIALS	
	BDA DSGN. REV.
	BDA TECH REV.

CCAS
PROJECT NO.: 1107
DRAWN: RP / RW / JKD
DATE: 2/27/2015

E203
OF

Save Date: February 26, 2015 - 5:07 PM - Julie
Plot Date: February 26, 2015 - 5:08 PM
Drawing Name: F:\15016 Carson City Animal Services\15016 CADD\Constructs\Electrical\15016 - E203 - Electrical Legend & Sched-Details.dwg

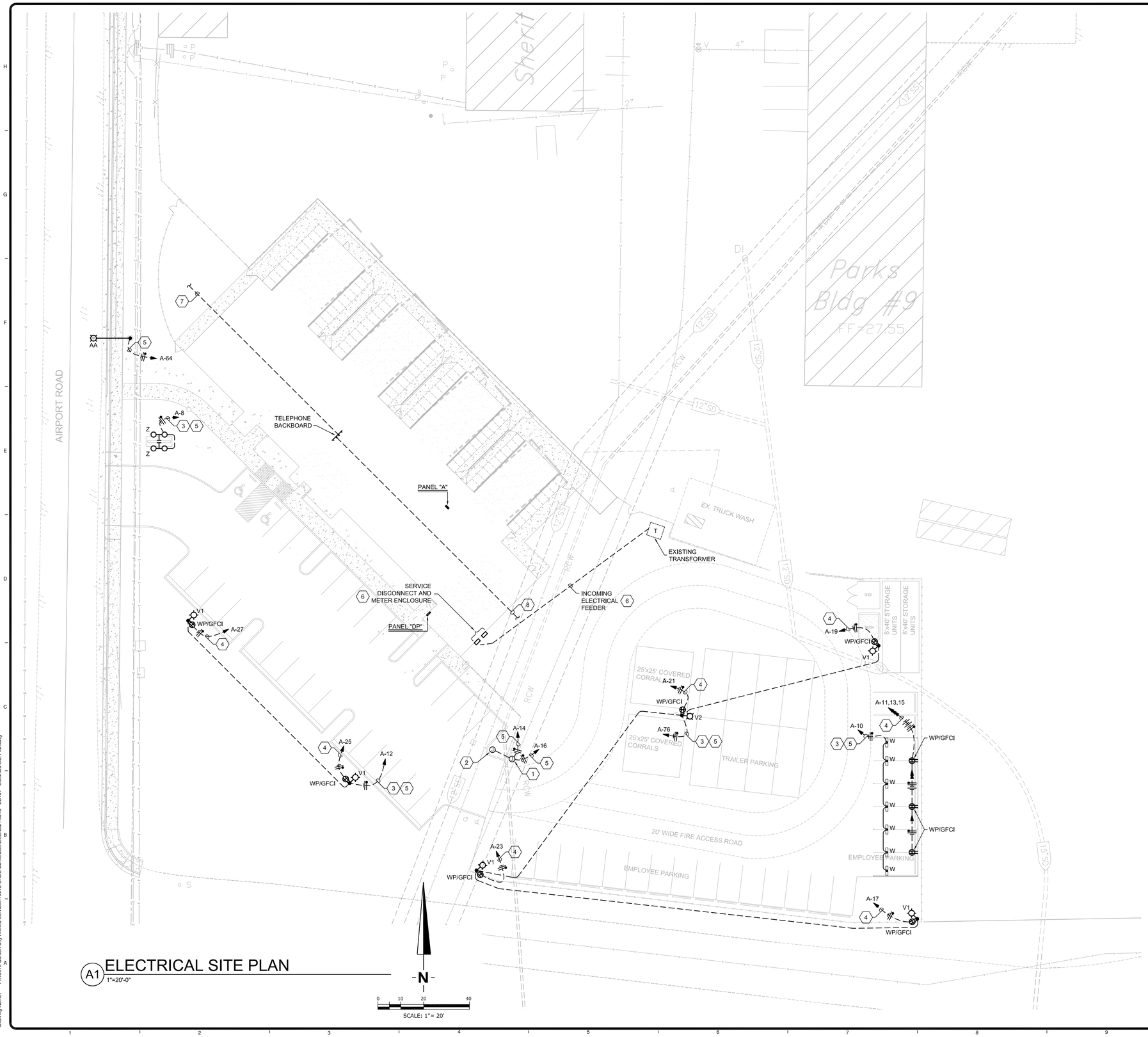

A1 ELECTRICAL SITE PLAN
1"=20'-0"

PROJECT GENERAL NOTES

REQUIREMENTS

Installation, materials, equipment and workmanship shall conform to the applicable provisions of the NFPA, the National Electrical Code (NEC), the National Electrical Safety Code (NESC) and the terms and conditions of the Electrical Utility and other authorities having lawful jurisdiction pertaining to the work required. All modifications required by these codes, rules, regulations and authorities shall be made by the Contractor without additional cost.

Conflicting code requirements shall be brought to the attention of the Architect. Where two or more codes apply, the most stringent of the codes shall govern.

EQUIPMENT REQUIREMENTS

The Electrical requirements for equipment specified or indicated on the Drawings are based on information available at the time of design. If equipment furnished for installation has Electrical requirements other than indicated on the Electrical Drawings, the Contractor shall make all adjustments to wire and conduit size, controls, disconnecting means, overcurrent protection and installation as required to accommodate the equipment supplied, without additional cost to the Owner. All adjustments to the Drawings reflecting the Electrical System shall be delineated in a submittal to the Architect immediately upon knowledge of the required adjustments. The complete responsibility and costs for such adjustments shall be assigned to the respective section of these Specifications in which the equipment is furnished.

PROJECT EXECUTION

Fabrication, erection and installation of the complete Electrical System shall be done in a first class workmanlike manner by qualified personnel experienced in such work and shall proceed in an orderly manner so as not to hold up the progress of the project. The Contractor shall check all areas and surface where Electrical equipment or material is to be installed, removed or relocated and report any unsatisfactory conditions before starting work. Commencement of work signifies this Contractor's acceptance of the prevailing conditions.

UTILITY REQUIREMENTS

The Drawings reflect requirements of the serving utilities based on information derived from representatives of the utilities. During the project design phase, the fact that the Architect may undertake to show the utility(s) requirements, does not necessarily indicate that the Architect represents the utilities or their requirements; therefore, within 10 working days after Contract Award and/or Notice to Proceed has been issued, the Contractor shall be responsible for coordinating the requirements of the utilities for the Power System. The Owner shall be responsible for coordinating the requirements for the Telephone and Television Systems.

Any deviations from the documents shall be brought to the attention of the Architect no later than 10 working days after Award of Contract and/or Notice to Proceed. Failure to notify the Architect within the 10-day time frame signifies the acceptance of documents and utility requirements by the Contractor and all associated costs therein.

DRAWINGS

The Electrical Drawings show the general arrangement of all conduit, equipment, etc. and shall be followed as closely as actual building construction and the work of other trades will permit. The Architectural and Structural Drawings shall be considered as a part of the work insofar as these Drawings furnish the Contractor with information relating to the design and construction of the building. Architectural Drawings shall take precedence over Electrical Drawings. The Contractor shall investigate the structural and finish conditions affecting the work and shall arrange his work accordingly, providing such fittings, elbows, pullboxes and accessories as may be required to meet such conditions.

The Contractor shall verify the dimensions governing the Electrical work at the building. No extra compensation shall be claimed or allowed on account of differences between actual dimensions and those indicated on the Drawings.

The approximate locations of cabinets, panelboards, wiring gutters, switches, light outlets, power outlets, etc., are indicated on the Drawings; however, the exact location shall be determined after thoroughly examining the general building plans and by actual measurements during construction to avoid conflicts with any Structural, Architectural, or other trades, with all locations subject to the approval of the Architect.

Verify with the Architect all locations of conduit, boxes, etc., stubbed in the floor prior to installation.

KEYED NOTES

1. JUNCTION BOX FOR POWER CONNECTION TO AUTOMATIC GATE. COORDINATE MOUNTING REQUIREMENTS WITH EQUIPMENT SUPPLIER, AND LOCATION WITH ARCHITECT PRIOR ROUGH-IN.
2. JUNCTION BOX FOR PROXIMITY CARD READER. COORDINATE MOUNTING REQUIREMENTS WITH EQUIPMENT SUPPLIER AND ARCHITECT PRIOR TO ROUGH-IN. EXTEND 1" CONDUIT WITH PULLWIRE TO AUTOMATIC GATE CONTROLLER.
3. EXTEND CIRCUIT THROUGH TIME CLOCK/PHOTO-CELL CONTROLLER AND THEN TO PANEL INCIATED. REFER TO DETAIL ON SHEET E202.
4. UTILIZE #8 CONDUCTORS THROUGHOUT CIRCUIT.
5. UTILIZE #10 CONDUCTORS THROUGHOUT CIRCUIT.
6. REFER TO POWER RISER DIAGRAM ON SHEET E201 FOR ADDITIONAL INFORMATION.
7. (3) 2" CONDUITS WITH PULLWIRE FOR INCOMING COMMUNICATIONS SERVICE - (1) CONDUIT FOR AT&T, (1) CONDUIT FOR CHARTER COMMUNICATIONS AND (1) CONDUIT FOR SPARE. REFER TO CIVIL DRAWINGS FOR ADDITIONAL INFORMATION.
8. (2) 2" CONDUITS WITH PULLWIRE FOR INCOMING COMMUNICATIONS SERVICE - (1) CONDUIT FOR FIBER OPTIC AND (1) CONDUIT FOR SPARE. REFER TO CIVIL DRAWINGS FOR ADDITIONAL INFORMATION.

WARNING

IF ANY UTILITY LINES, PIPELINES, OR UNDERGROUND UTILITY LINES ARE SHOWN ON THESE DRAWINGS, THEY ARE SHOWN IN AN APPROXIMATE MANNER ONLY, AND SUCH LINES MAY EXIST WHERE NONE ARE SHOWN. IF ANY SUCH EXISTING LINES ARE SHOWN, THE LOCATION IS BASED UPON INFORMATION PROVIDED BY THE UTILITY OR PIPELINE COMPANY, THE OWNER OR BY OTHERS, AND THE INFORMATION MAY BE INCOMPLETE, OR MAY BE OBSOLETE BY THE TIME CONSTRUCTION COMMENCES.

THE ENGINEER HAS UNDERTAKEN NO FIELD VERIFICATION OF THE LOCATION, DEPTH, SIZE OR TYPE OF EXISTING UTILITY LINES, PIPELINES, OR UNDERGROUND UTILITY LINES, MAKES NO REPRESENTATION PERTAINING THERETO, AND ASSUMES NO RESPONSIBILITY OR LIABILITY THEREFORE. THE CONTRACTOR SHALL INFORM ITSELF TO THE LOCATION OF ANY UTILITY LINE, PIPELINE OR UNDERGROUND UTILITY LINE IN OR NEAR THE AREA OF THE WORK IN ADVANCE OF AND DURING EXCAVATION WORK. THE CONTRACTOR IS FULLY RESPONSIBLE OF ANY AND ALL DAMAGE CAUSED BY IT'S FAILURE TO LOCATE, IDENTIFY AND PRESERVE ANY AND ALL EXISTING UTILITIES, LINES, PIPELINES, OR UNDERGROUND UTILITY LINES. THE CONTRACTOR SHALL COMPLY WITH STATE STATUTES, MUNICIPAL AND LOCAL ORDINANCES, RULES, AND REGULATIONS, IF ANY, PERTAINING TO THE LOCATION OF THESE LINES AND FACILITIES IN PLANNING AND CONDUCTING EXCAVATION, WHETHER BY CALLING OR NOTIFYING THE UTILITIES, COMPLYING WITH "NM ONE CALL" PROCEDURES, OR OTHERWISE.

THE RESPONSE GROUP, INC.
An Electrical/Mechanical Engineering Corporation
11930 Menaul N.E. Suite 214
Albuquerque, New Mexico 87112
Phone:(505) 323-7629 Fax:(505) 323-7594
E-mail: theresponsegroup@trg-inc.net

801 Lamberton Pl. NE
Albuquerque, NM 87107
Phone: (505) 858-0180
Fax: (505) 858-0111
Email: info@bdaarc.com

The documents transmitted herein are the sole Intellectual Property of BDA Architecture, P.C. Any use, reuse, or reproduction in any form without the express written consent of, and compensation to, BDA Architecture is a violation of federal law.

BDA

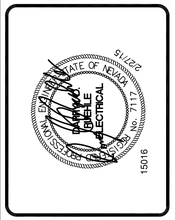

15016

CARSON CITY ANIMAL SERVICES

549 Airport Road
Carson City, Nevada 89701
City of Carson City

Copyright, 2015, BDA ARCHITECTURE PC.

ELECTRICAL SITE PLAN

REV.#	DATE	COMMENTS
REVISION: -		
REVISION: -		
REVISION: -		
REVISION: -		

REVIEWS	
INITIALS	
	BDA DSGN. REV.
	BDA TECH REV.

CCAS

PROJECT NO.: 1107
DRAWN: RP / RW / JKD
DATE: 2/27/2015

ES101

OF

Save Date: February 26, 2015 - 1:15 PM - Julie
Plot Date: February 26, 2015 - 5:31 PM
Drawing Name: F:\15016 Carson City Animal Services\15016 CADD\Constructs\Electrical\15016 - ES101 - Electrical Site Plan.dwg