LITTLE LANE
2015 ROADWAY RECONSTRUCTION
CARSON CITY, NEVADA
PROJECT ST0006

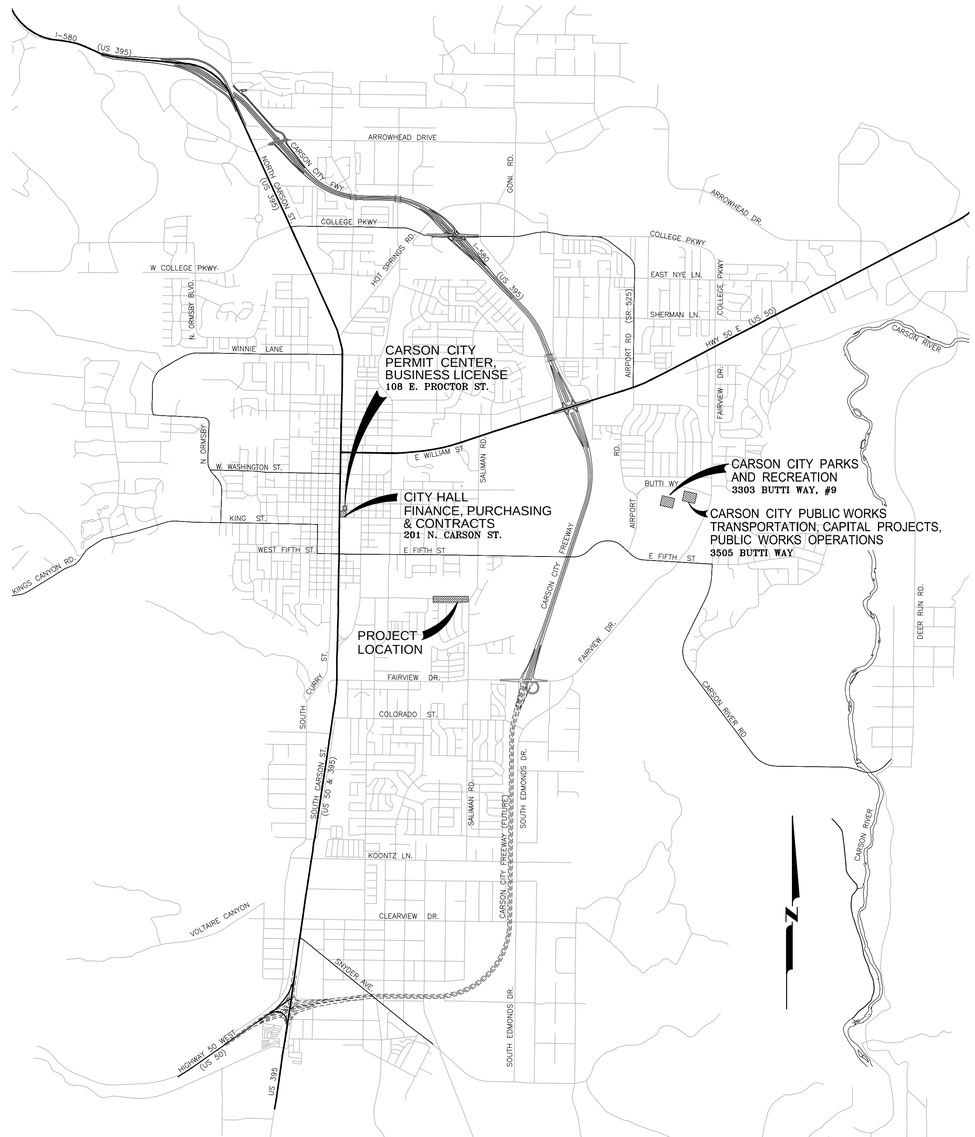

VICINITY MAP
N.T.S.

BOARD OF SUPERVISORS

Robert Crowell	Mayor
Karen Abowd	Supervisor
Brad Bonkowski	Supervisor
Lori Bagwell	Supervisor
Jim Shirk	Supervisor
Alan Glover	City Clerk

DESIGNED FOR:

CARSON CITY PUBLIC WORKS DEPARTMENT
OPERATIONS DIVISION
3505 BUTTI WAY
CARSON CITY, NV 89701
887-2355

SHEET INDEX

C1	TITLE SHEET
C2	SHEET INDEX, STORM WATER PROTECTION PLAN, NOTES & LEGEND
C3	PLAN & PROFILE – LITTLE LANE (STA 16+50 TO STA 20+00)
C4	PLAN & PROFILE – LITTLE LANE (STA 20+00 TO STA 24+00)
C5	PLAN & PROFILE – LITTLE LANE (STA 24+00 TO STA 28+00)
C6	PLAN & PROFILE – LITTLE LANE (STA 28+00 TO STA 31+00)
C7	DETAILS
C8	DETAILS
C9	DETAILS

Call before you Dig
Avoid cutting underground utility lines. It's costly.
Call 811
OR
1-800-227-2600

APPLICATION NO. _____–_____

DESIGNED BY: BD/DA
DRAWN BY: BD
CHECKED BY: DLR
DWG NO.: LITTLECURB-TS1
SCALE (HORIZ): XX
SCALE (VERT): XX
PLOT DATE: 2015MAY11

CARSON CITY
PUBLIC WORKS DEPARTMENT
3505 BUTTI WAY CARSON CITY, NEVADA 89701
PH: 887-2355 FAX: 887-2112

PROFESSIONAL ENGINEER - STATE OF NEVADA
DANIEL L. ROTTER
Exp 12-31-15
CIVIL
No. 22071

REV.	DATE	DESCRIPTION	BY	APP'D

LITTLE LANE
2015 ROADWAY RECONSTRUCTION
PROJECT No. ST0006

TITLE SHEET

SHEET C1 OF 9

BID SET - NOT FOR CONSTRUCTION

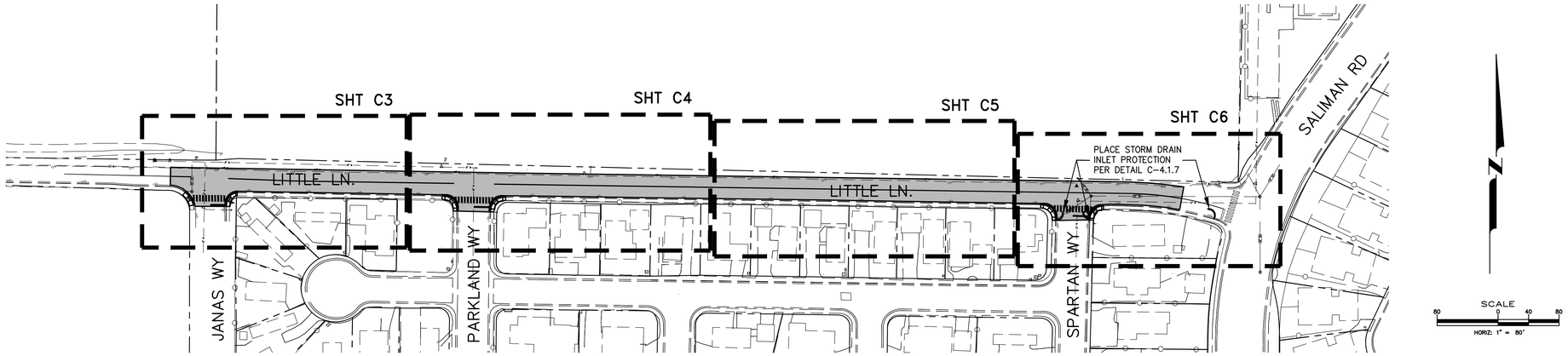

SHEET INDEX

SCALE: 1" = 80' HORIZ.

ABBREVIATIONS

AB	AGGREGATE BASE
AC	ASPHALTIC CONCRETE
AGG	AGGREGATE
APN	ASSESSORS PARCEL NUMBER
ARV	AIR RELEASE VALVE
ASSY	ASSEMBLY
ASTM	AMERICAN SOCIETY FOR TESTING MATERIALS
AWWA	AMERICAN WATER WORKS ASSOCIATION
BVC	BEGIN VERTICAL CURVE
CATV	CABLE TV
CB	CATCH BASIN
CL	CENTER LINE, CLASS
COMP	COMPACT/COMPACTED
CONC	CONCRETE
CONN	CONNECTION
C&G	CURB & GUTTER
DI	DROP INLET/DUCTILE IRON
DTL	DETAIL
DIA, ø	DIAMETER
DWG	DRAWING
EXIST	EXISTING
E	EAST
EA	EACH
ELECT	ELECTRIC/ELECTRICAL
EL, ELEV	ELEVATION
EP	EDGE OF PAVEMENT
EVC	END VERTICAL CURVE
EXIST	EXISTING
F	FEET
FG	FINISH GRADE
FL	FLOWLINE
G	GAS
GS	GAS SERVICE
GRD	GRADE
GV	GAS VALVE/GATE VALVE
HORIZ	HORIZONTAL
HP	HIGH POINT/HORSEPOWER
HV	HORIZONTAL/VERTICAL
HYD	HYDRANT
I.D.	INSIDE DIAMETER
IE, INV	INVERT ELEVATION
INTX	INTERSECTION
IRR, IRRG	IRRIGATION LINE
L	LENGTH
LAT	LATERAL
LF	LINEAL FEET
LT	LEFT
MAX	MAXIMUM
MDD	MAXIMUM DRY DENSITY
MH	MANHOLE
MJ	MECHANICAL JOINT
MIN	MINIMUM
MMD	MAXIMUM MARSHAL DENSITY
N	NORTH
(N)	NEW
N.I.C.	NOT IN CONTRACT
NTS	NOT TO SCALE
OC	ON CENTER
O.D.	OUTSIDE DIAMETER
OGL	ORIGINAL GROUND LINE
POC	POINT OF CURVATURE
PCC	PORTLAND CEMENT CONCRETE
PE	POLYETHYLENE
PI	POINT OF INTERSECTION
PL	PROPERTY LINE
PSI	POUNDS PER SQUARE INCH
PT	POINT OF TANGENCY
PVC	POLYVINYL CHLORIDE
PVI	POINT OF VERTICAL INTERSECTION
PVMT	PAVEMENT
Q	FLOW (CFS)
R	RADIUS
RCH	REACH
RCP	REINFORCED CONCRETE PIPE
REQ'D	REQUIRED
ROW	RIGHT OF WAY
RPM	REVOLUTIONS PER MINUTE
RT	RIGHT
S	SLOPE, SOUTH
SCH	SCHEDULE
SD	STORM DRAIN
SDMH	STORM DRAIN MANHOLE
SDR	STANDARD DIMENSION RATIO
SF	SQUARE FEET
SHT	SHEET
SPKR	SPRINKLER
SS	SANITARY SEWER
SSMH	SANITARY SEWER MANHOLE
SSPWC	STANDARD SPECIFICATIONS FOR PUBLIC WORKS CONSTRUCTION
STA	STATION
STD	STANDARD
STL	STEEL
SVC	SERVICE
T, TELE	TELEPHONE
T.B.C.	TOP BACK OF CURB
TOC	TOP OF CURB/TOP OF CONCRETE
TOP	TOP OF PIPE
T.O.V.	TOP OF VAULT
TRANS	TRANSFORMER
TYP	TYPICAL
U/G	UNDERGROUND
UGE	UNDERGROUND ELECTRIC
UL	UNDERWRITERS LABORATORIES
UN	UNLESS NOTED
VC	VERTICAL CURVE
VG	VALLEY GUTTER
VERT	VERTICAL
W	WEST, WATER
W/	WITH
W/O	WITHOUT
WS	WATER SERVICE
WV	WATER VALVE
X	EXISTING

LEGEND

EXISITNG		PROPOSED
—— P ——	APPROX. PROPERTY LINE	
—— — ——	CENTER LINE	
— — — —	EASEMENT	
—o—o—o—o—	FENCE	
—//— —//—	EDGE OF PAVEMENT	
	CONSTRUCTION NOTE	(XX)
— — W — —	WATER MAIN	
	WATER VALVE	
	FIRE HYDRANT	
— — — 18"SS — — —	SEWER PIPE	
(S)	SEWER MANHOLE	
— — — 18"SD — — —	STORMDRAIN PIPE	
(D)	STORMDRAIN MANHOLE	
61 4644.45 DESC	SURVEY POINT	
△	SURVEY CONTROL POINT	
—— · · · · ——	FLOW LINE/DRAINAGE SWALE	
(4800)	CONTOUR ELEVATION	
x 4927.30	SPOT ELEVATION	
PP	POWER POLE	
— — →	GUY WIRE	
	ASPHALT PATCH	
	SAWCUT & REMOVE EXIST AC PAVEMENT	

BASIS OF BEARING, COORDINATES AND ELEVATION:

THE BASIS OF BEARING, COORDINATES AND ELEVATION FOR THIS PROJECT IS:
THE LINE BETWEEN "HV-1" (N14732972.70 E 2291303.72 ELEV=4650.70) – LOCATED 170' EAST OF THE INTERSECTION OF LITTLE LN. AND S. ROOP ST. AND "HV-2" (N 14735235.33 E 2294016.37 ELEV=4643.03) – LOCATED AT THE INTERSECTION OF GOLDFIELD AVE. AND S. SALIMAN RD., WITH THE LINE BETWEEN THE TWO POINTS HAVING A BEARING OF N 50°10'06" E AND DISTANCE OF 3532.42'.
COORDINATES ARE NEVADA STATE PLANE, WEST ZONE NAD83. ELEVATIONS ARE BASED ON NAVD88 DATUM.

HORIZONTAL & VERTICAL CONTROL POINT DATA

POINT	NORTHING	EASTING	ELEVATION	DESCRIPTION / LOCATION
HV-1	14732972.70	2291303.72	4650.70	CARSON CITY CONTROL POINT "CC021 2010"
HV-2	14735235.33	2294016.37	4643.03	CARSON CITY CONTROL POINT "CC019 2010"

NOTE:

THE CONTRACTOR SHALL BE HELD RESPONSIBLE TO REPLACE ALL EXISTING PERMANENT SURVEY CONTROL MONUMENTS WHICH ARE DAMAGED OR DISTURBED DUE TO HIS CONSTRUCTION EFFORTS. SURVEY CONTROL MONUMENTS SHALL BE (CLASS A MONUMENTS) INSTALLED PER STANDARD DRAWING C-5.5.3. THE RE-ESTABLISHMENT OF SURVEY MONUMENTS SHALL BE COMPLETED BY A NEVADA LICENSED PROFESSIONAL LAND SURVEYOR.

STORM WATER NOTES:

1. THE CONTRACTOR WILL BE SOLELY AND COMPLETELY RESPONSIBLE FOR ACQUIRING A STORMWATER DISCHARGE PERMIT FROM THE NEVADA DIVISION OF ENVIRONMENTAL PROTECTION (NDEP) INCLUDING DEVELOPING, SUBMITTING AND IMPLEMENTING A STORM WATER POLLUTION PREVENTION PLAN (SWPPP). THE CONTRACTOR SHALL DEVELOP, PLACE AND MAINTAIN STORM WATER PROTECTION DEVICES IN COMPLIANCE WITH THE NEVADA CONTRACTORS FIELD GUIDE FOR CONSTRUCTION SITE BEST MANAGEMENT PRACTICES (JUNE 2008).
2. ALL DISTURBED SOILS SHALL BE RESEEDED UPON COMPLETION OF CONSTRUCTION UNLESS OTHERWISE SPECIFIED.

Call before you Dig
Avoid cutting underground utility lines. It's costly.
Call 811 OR 1-800-227-2600

DESIGNED BY: BD/DA
DRAWN BY: BD
CHECKED BY: DLR
DWG NO.: LITTLECURB-BS1
SCALE (HORIZ): 1"=80'
SCALE (VERT): N/A
PLOT DATE: 2015MAY01

CARSON CITY PUBLIC WORKS DEPARTMENT
3505 BUTTI WAY CARSON CITY, NEVADA 89701
PH: 887-2355

PROFESSIONAL ENGINEER - STATE OF NEVADA
DANIEL L ROTTER
Exp. 12-31-15
CIVIL
No. 22071

REV.	DATE	DESCRIPTION	BY	APP'D

LITTLE LANE
2015 ROADWAY RECONSTRUCTION
PROJECT No. ST0006
INDEX MAP
STORM WATER PROTECTION PLAN, NOTES, LEGEND & ABBREVIATIONS

SHEET C2 OF 9

BID SET - NOT FOR CONSTRUCTION

I:\CAPITAL PROJECTS\Projects\ST0006-LittleLnSimpsonr02\Design\DWG\littlecurb-bs1.dwg, 5/11/2015 10:12:46 AM, bdayal

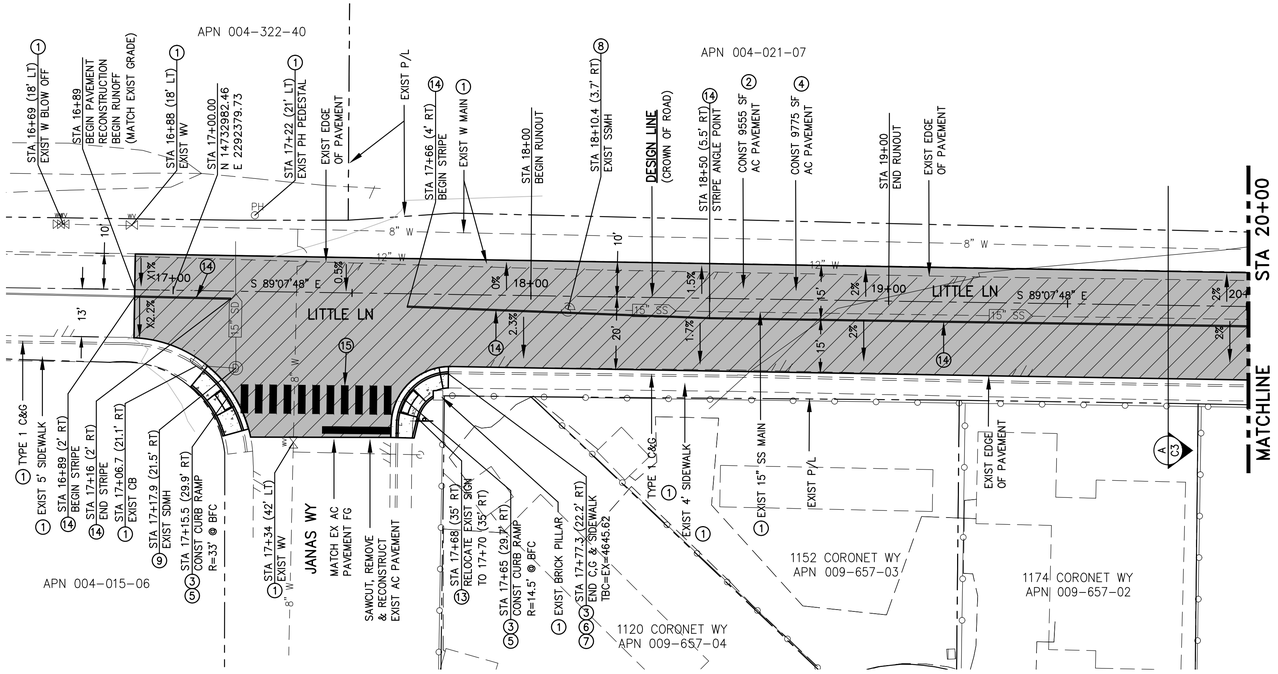

PLAN – LITTLE LANE

SCALE: 1" = 20' HORIZ.

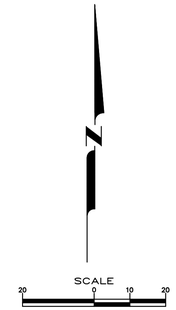

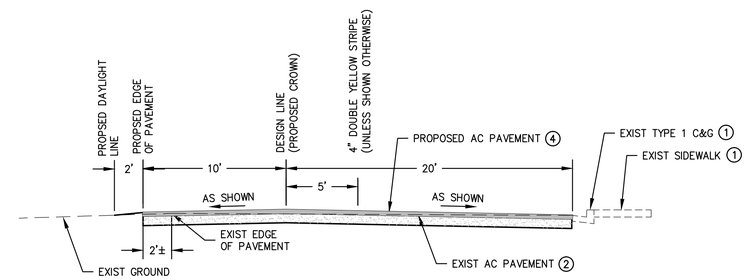

A TYPICAL SECTION

EXCLUDING:
STA 16+89 TO STA 19+00
STA 28+00 TO STA 30+17

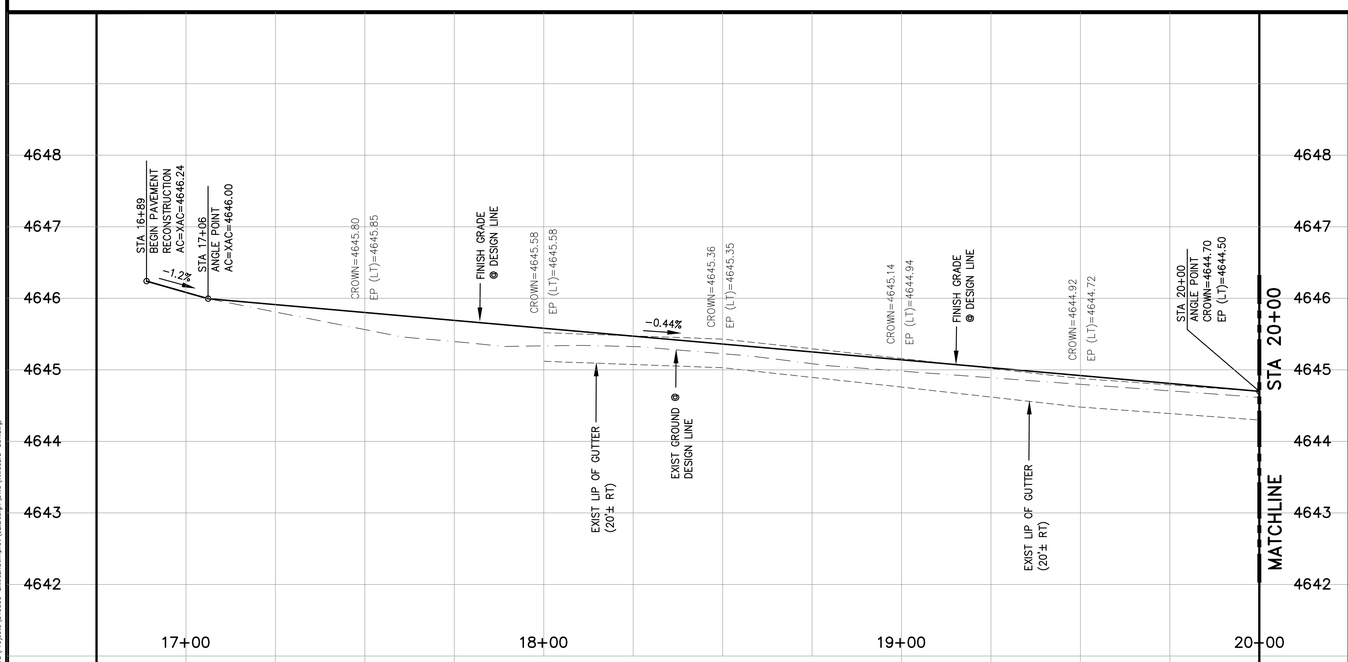

PROFILE – LITTLE LANE

SCALE: 1" = 20' HORIZ.
1" = 1' VERT.

CONSTRUCTION NOTES:

1. PROTECT IN PLACE
2. SAWCUT, REMOVE AND DISPOSE OF EXISTING ASPHALT PAVEMENT.
3. SAWCUT, REMOVE AND DISPOSE OF EXISTING PCC CURB & GUTTER AND SIDEWALK.
4. CONSTRUCT 4" AC PAVEMENT COMAPCTED TO 95% ON 8" AGG BASE COMPACTED TO 95%.
5. CONSTRUCT PARALLEL APEX CURB RAMP PER DETAIL C-5.3.5.
6. CONSTRUCT TYPE 1 CURB AND GUTTER PER DETAIL C-5.1.3.
7. CONSTRUCT TYPE A SIDEWALK PER DETAIL C-5.2.2.
8. ADJUST EXISTING SANITARY SEWER MANHOLE RIM TO FINISH GRADE PER DETAIL C-2.1.3. AND C-2.1.5.
9. ADJUST EXISTING STORM DRAIN MANHOLE RIM TO FINISH GRADE PER DETAIL C-2.1.3. AND C-2.1.5.
10. ADJUST EXISTING WATER VALVE BOX RIM TO FINISH GRADE PER DETAIL C-3.1.6.
11. PROVIDE LICENSED SURVEYOR TO LOCATE AND REPLACE EXISTING SURVEY MONUMENT PER DETAIL C-5.5.3.
12. RECONSTRUCT EXISTING FENCE AS NECESSARY.
13. REMOVE, SALVAGE AND RELOCATE EXISTING STREET SIGN PER DETAIL C-5.4.1 and C-5.4.2.
14. PAINT DOUBLE 4" SOLID YELLOW LINE.
15. PAINT 8' CROSSWALK AND STOP BAR PER DETAIL C-5.4.3.
16. INSTALL 15" RCP STORM DRAIN PER DETAIL C-1.2.1.

Call before you Dig
Avoid cutting underground utility lines. It's costly.
Call 811 OR 1-800-227-2600

DESIGNED BY: BD/DA
DRAWN BY: BD
CHECKED BY: DLR
DWG NO.: LITTLECURB-BS1
SCALE (HORIZ): 1"=80'
SCALE (VERT): N/A
PLOT DATE: 2015MAY011

CARSON CITY
PUBLIC WORKS DEPARTMENT
3505 BUTTI WAY CARSON CITY, NEVADA 89701
PH: 775-887-2355 FAX: 775-887-2112

PROFESSIONAL ENGINEER - STATE OF NEVADA
DANIEL L. ROTTER
Exp. 12-31-15
CIVIL
No. 22071

REV.	DATE	DESCRIPTION	BY	APP'D

LITTLE LANE
2015 ROADWAY RECONSTRUCTION
PROJECT No. ST0006
LITTLE LANE
PLAN & PROFILE
STA 16+50 to STA 20+00

SHEET C3 OF 9

BID SET - NOT FOR CONSTRUCTION

I:\CAPITAL PROJECTS\Projects\ST0006-LittleLnSimpson\02.Design\DWG\littlecurb-bs1.dwg, 5/11/2015 10:52:49 AM, bdoyal

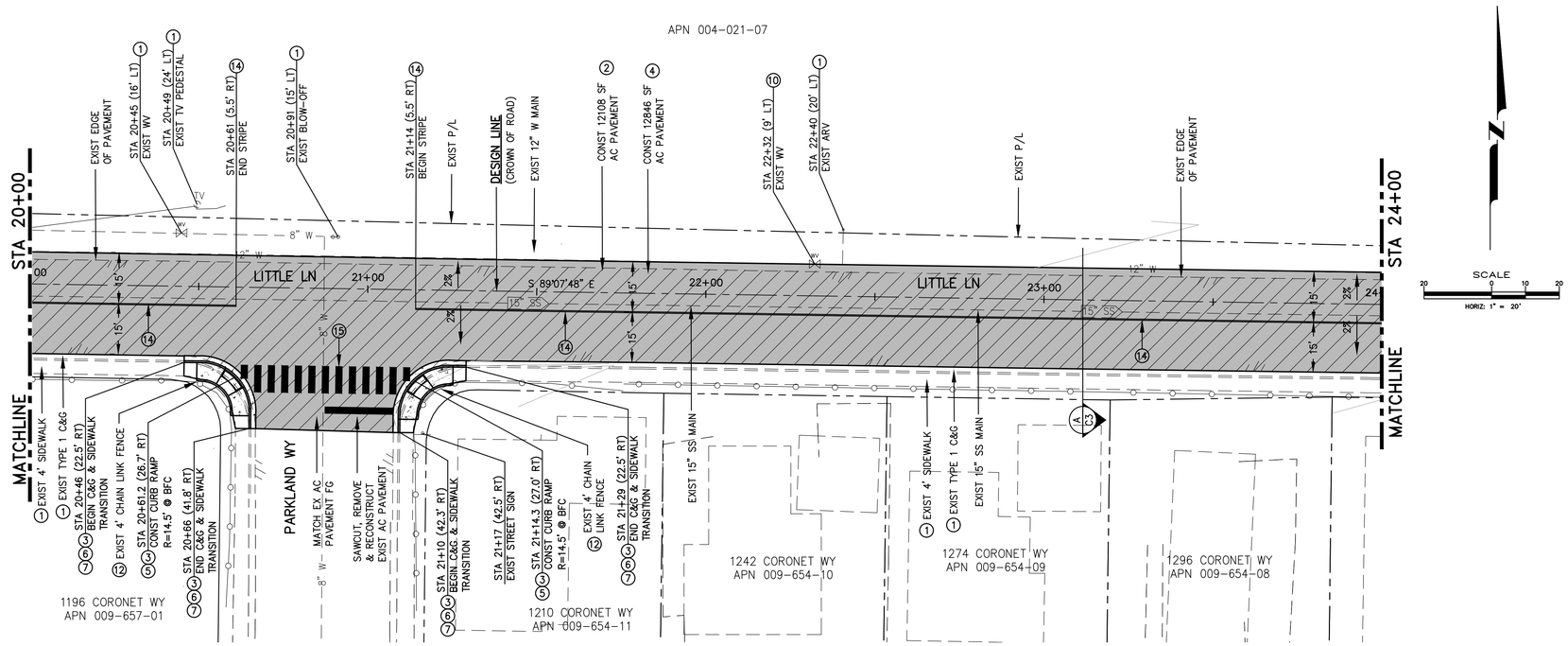

PLAN – LITTLE LANE

SCALE: 1" = 20' HORIZ.

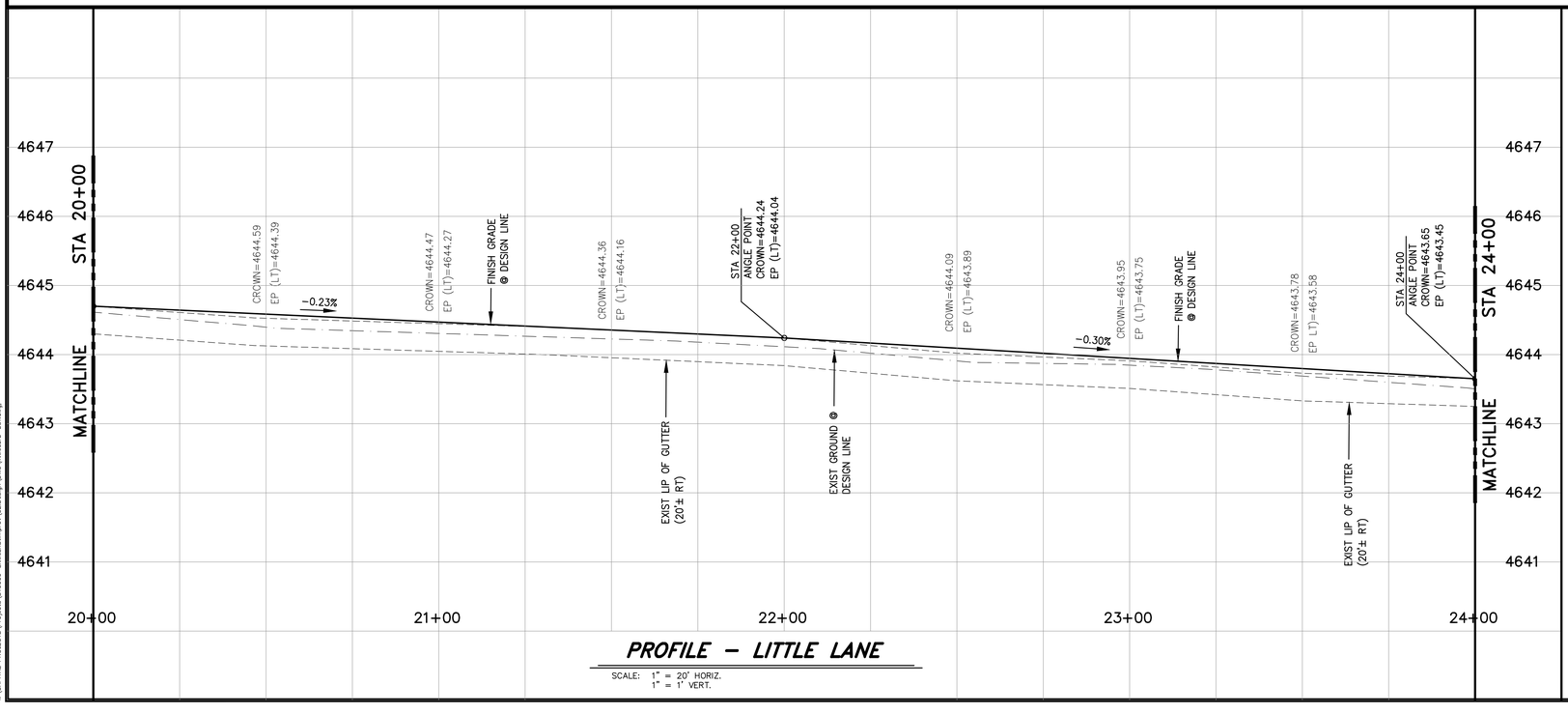

PROFILE – LITTLE LANE

SCALE: 1" = 20' HORIZ.
1" = 1' VERT.

CONSTRUCTION NOTES:

1. PROTECT IN PLACE
2. SAWCUT, REMOVE AND DISPOSE OF EXISTING ASPHALT PAVEMENT.
3. SAWCUT, REMOVE AND DISPOSE OF EXISTING PCC CURB & GUTTER AND SIDEWALK.
4. CONSTRUCT 4" AC PAVEMENT COMAPCTED TO 95% ON 8" AGG BASE COMPACTED TO 95%.
5. CONSTRUCT PARALLEL APEX CURB RAMP PER DETAIL C-5.3.5.
6. CONSTRUCT TYPE 1 CURB AND GUTTER PER DETAIL C-5.1.3.
7. CONSTRUCT TYPE A SIDEWALK PER DETAIL C-5.2.2.
8. ADJUST EXISTING SANITARY SEWER MANHOLE RIM TO FINISH GRADE PER DETAIL C-2.1.3. AND C-2.1.5.
9. ADJUST EXISTING STORM DRAIN MANHOLE RIM TO FINISH GRADE PER DETAIL C-2.1.3. AND C-2.1.5.
10. ADJUST EXISTING WATER VALVE BOX RIM TO FINISH GRADE PER DETAIL C-3.1.6.
11. PROVIDE LICENSED SURVEYOR TO LOCATE AND REPLACE EXISTING SURVEY MONUMENT PER DETAIL C-5.5.3.
12. RECONSTRUCT EXISTING FENCE AS NECESSARY.
13. REMOVE, SALVAGE AND RELOCATE EXISTING STREET SIGN PER DETAIL C-5.4.1 and C-5.4.2.
14. PAINT DOUBLE 4" SOLID YELLOW LINE.
15. PAINT 8' CROSSWALK AND STOP BAR PER DETAIL C-5.4.3.
16. INSTALL 15" RCP STORM DRAIN PER DETAIL C-1.2.1.

Call before you Dig
Avoid cutting underground utility lines. It's costly.
Call 811 OR 1-800-227-2600

DESIGNED BY: BD/DA
DRAWN BY: BD
CHECKED BY: DLR
DWG NO.: LITTLECURB-BS1
SCALE (HORIZ): 1"=20'
SCALE (VERT): 1"=1'
PLOT DATE: 2015MAY011

CARSON CITY
PUBLIC WORKS DEPARTMENT
3505 BUTTI WAY CARSON CITY, NEVADA 89701
PH: 775-887-2355 FAX: 775-887-2112

PROFESSIONAL ENGINEER - STATE OF NEVADA
DANIEL L. ROTTER
Exp. 12-31-15
CIVIL
No. 22071

REV.	DATE	DESCRIPTION	BY	APP'D

LITTLE LANE
2015 ROADWAY RECONSTRUCTION
PROJECT No. ST0006
LITTLE LANE
PLAN & PROFILE
STA 20+00 to STA 24+00

SHEET C4 OF 9

BID SET - NOT FOR CONSTRUCTION

I:\CAPITAL PROJECTS\Projects\ST0006-LittleLnSimprov\02.Design\DWG\littlecurb-bs1.dwg, 5/11/2015 10:53:51 AM, bdoyal

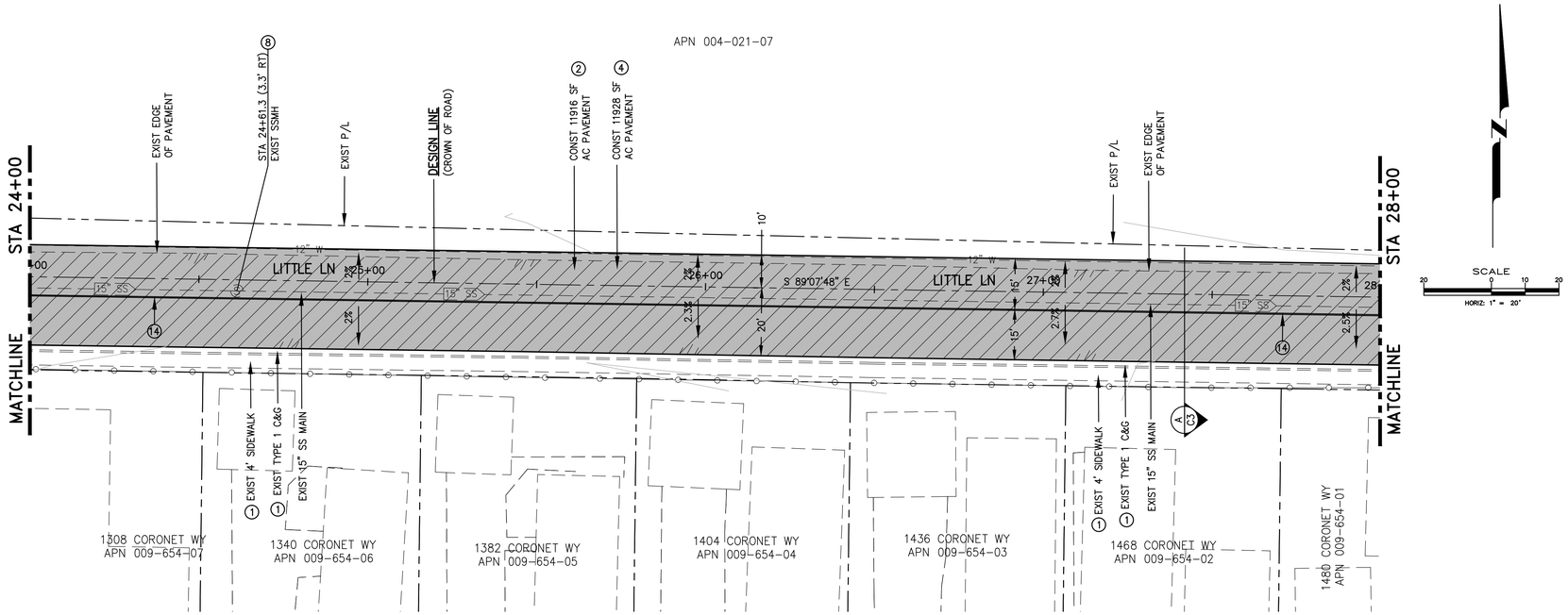

PLAN – LITTLE LANE

SCALE: 1" = 20' HORIZ.

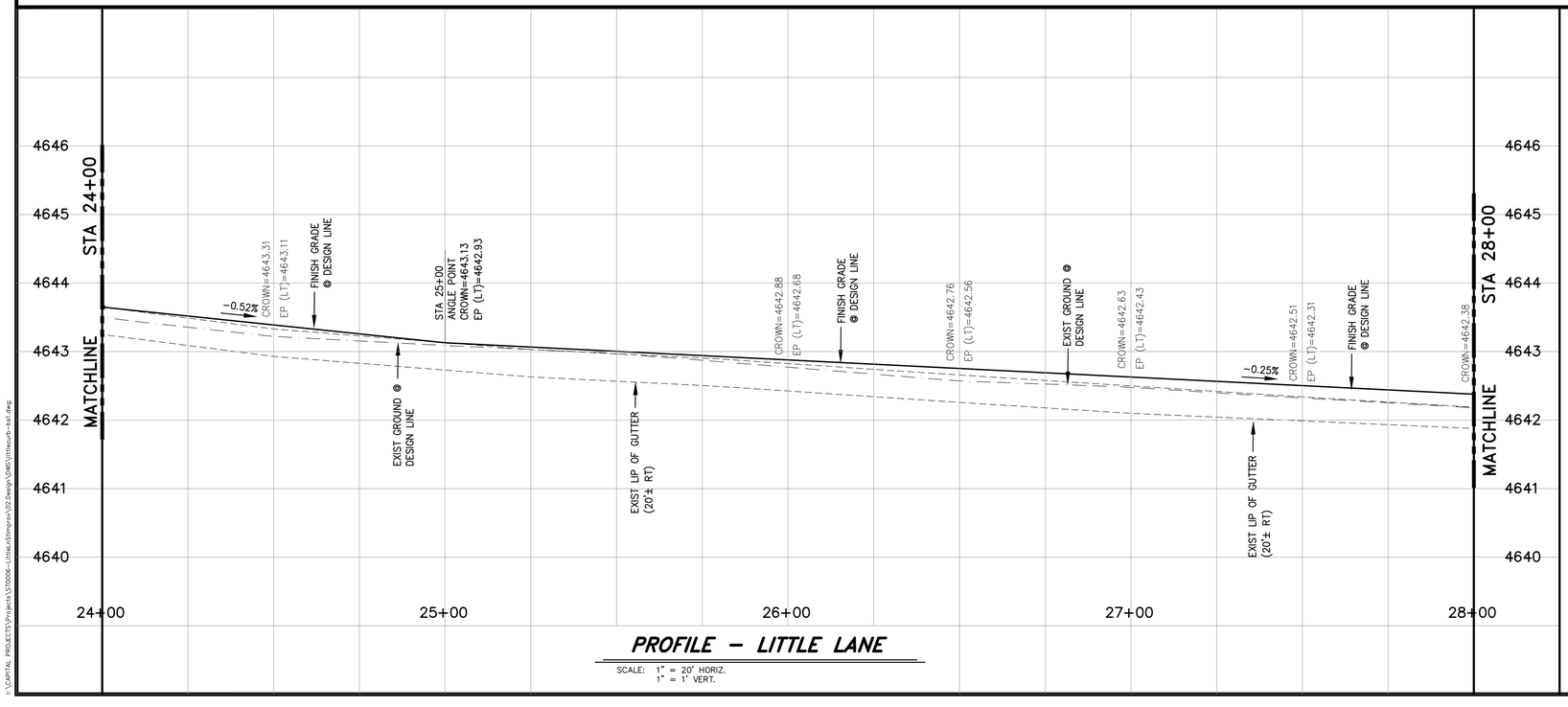

PROFILE – LITTLE LANE

SCALE: 1" = 20' HORIZ.
1" = 1' VERT.

CONSTRUCTION NOTES:

1. PROTECT IN PLACE
2. SAWCUT, REMOVE AND DISPOSE OF EXISTING ASPHALT PAVEMENT.
3. SAWCUT, REMOVE AND DISPOSE OF EXISTING PCC CURB & GUTTER AND SIDEWALK.
4. CONSTRUCT 4" AC PAVEMENT COMAPCTED TO 95% ON 8" AGG BASE COMPACTED TO 95%.
5. CONSTRUCT PARALLEL APEX CURB RAMP PER DETAIL C-5.3.5.
6. CONSTRUCT TYPE 1 CURB AND GUTTER PER DETAIL C-5.1.3.
7. CONSTRUCT TYPE A SIDEWALK PER DETAIL C-5.2.2.
8. ADJUST EXISTING SANITARY SEWER MANHOLE RIM TO FINISH GRADE PER DETAIL C-2.1.3. AND C-2.1.5.
9. ADJUST EXISTING STORM DRAIN MANHOLE RIM TO FINISH GRADE PER DETAIL C-2.1.3. AND C-2.1.5.
10. ADJUST EXISTING WATER VALVE BOX RIM TO FINISH GRADE PER DETAIL C-3.1.6.
11. PROVIDE LICENSED SURVEYOR TO LOCATE AND REPLACE EXISTING SURVEY MONUMENT PER DETAIL C-5.5.3.
12. RECONSTRUCT EXISTING FENCE AS NECESSARY.
13. REMOVE, SALVAGE AND RELOCATE EXISTING STREET SIGN PER DETAIL C-5.4.1 and C-5.4.2.
14. PAINT DOUBLE 4" SOLID YELLOW LINE.
15. PAINT 8' CROSSWALK AND STOP BAR PER DETAIL C-5.4.3.
16. INSTALL 15" RCP STORM DRAIN PER DETAIL C-1.2.1.

Call before you Dig
Avoid cutting underground utility lines. It's costly.
Call 811 OR 1-800-227-2600

DESIGNED BY: BD/DA
DRAWN BY: BD
CHECKED BY: DLR
DWG NO.: LITTLECURB-BS1
SCALE (HORIZ): 1"=20'
SCALE (VERT): 1"=1'
PLOT DATE: 2015MAY011

CARSON CITY
PUBLIC WORKS DEPARTMENT
3505 BUTTI WAY CARSON CITY, NEVADA 89701
PH: 775-887-2355 FAX: 775-887-2112

PROFESSIONAL ENGINEER STATE OF NEVADA
DANIEL L. ROTTER
Exp: 12-31-15
CIVIL
No. 22071

REV.	DATE	DESCRIPTION	BY	APP'D

LITTLE LANE
2015 ROADWAY RECONSTRUCTION
PROJECT No. ST0006
LITTLE LANE
PLAN & PROFILE
STA 24+00 to STA 28+00

SHEET C5 OF 9

BID SET - NOT FOR CONSTRUCTION

I:\CAPITAL PROJECTS\Projects\ST0006-LittleLnSimprov\02.Design\DWG\littlecurb-bs1.dwg, 5/11/2015 10:53:53 AM, bdoyal

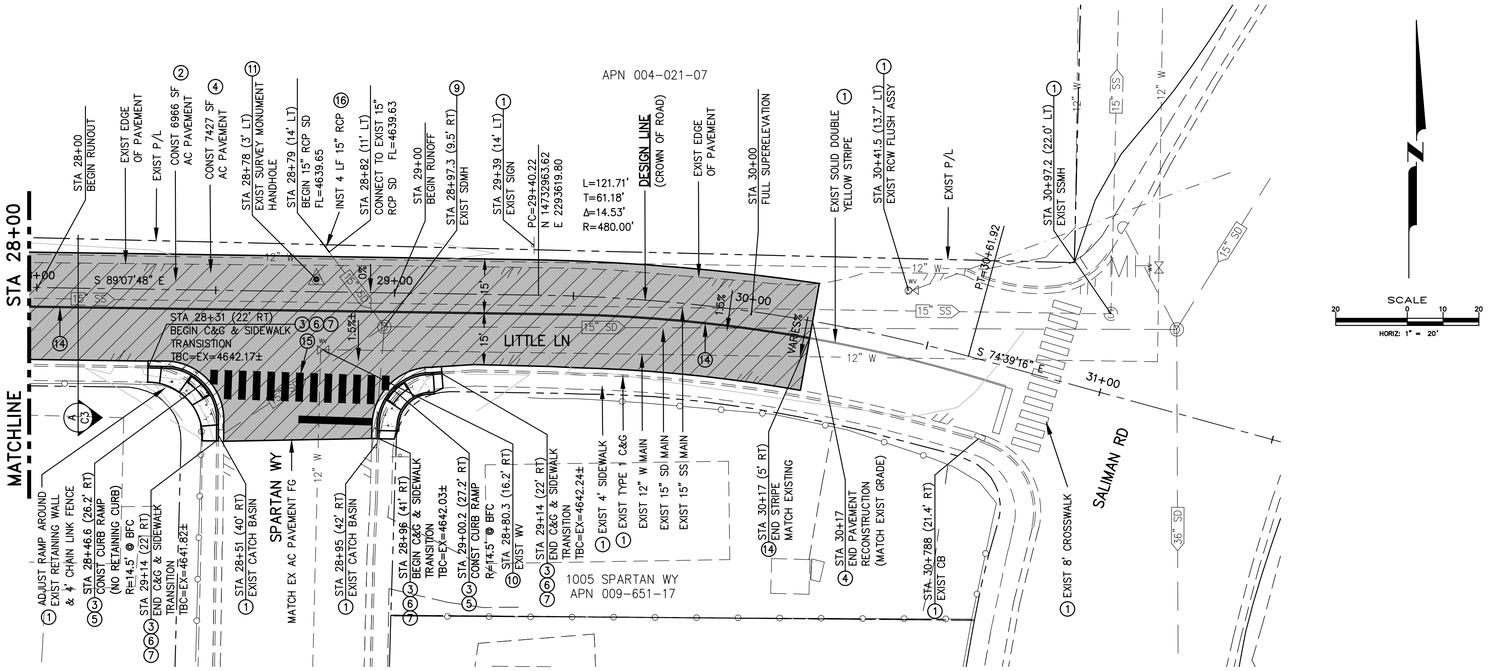

PLAN – LITTLE LANE

SCALE: 1" = 20' HORIZ.

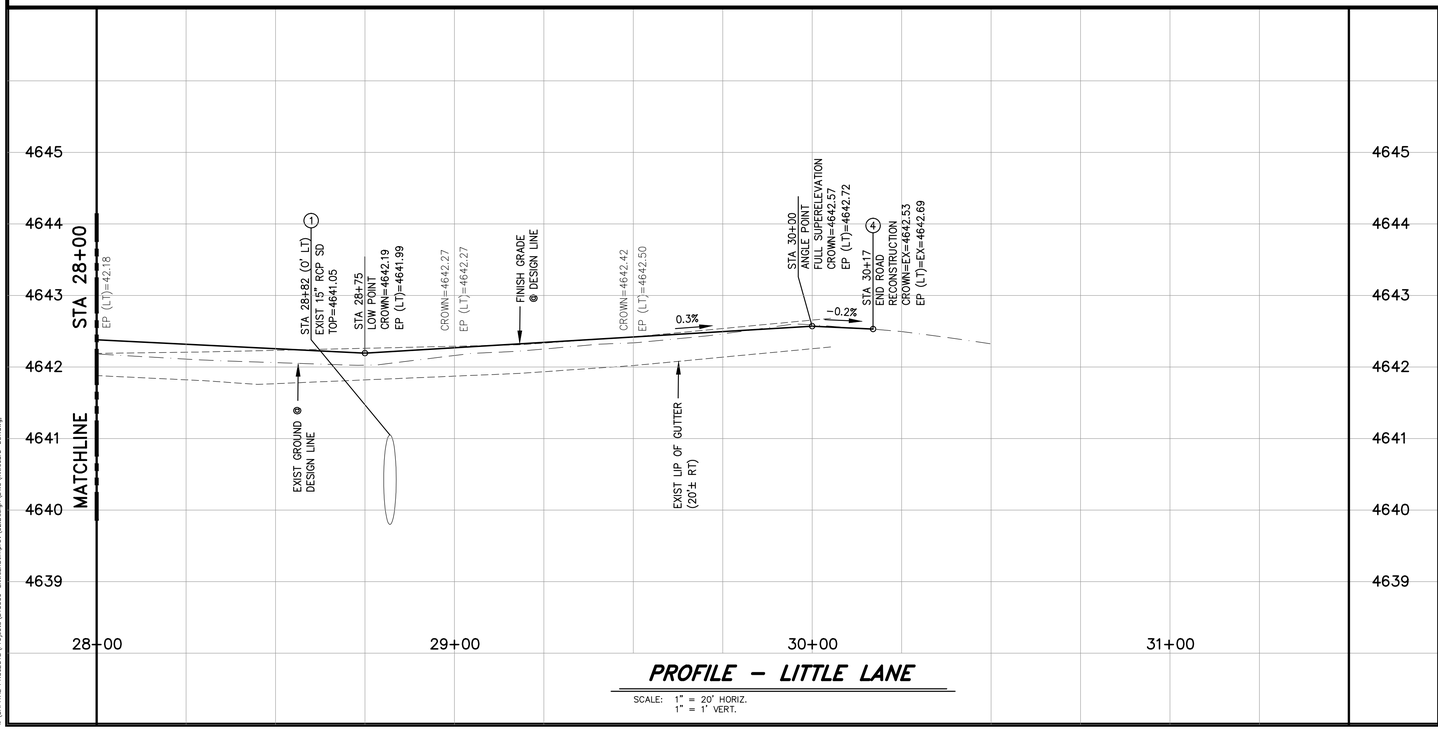

PROFILE – LITTLE LANE

SCALE: 1" = 20' HORIZ.
1" = 1' VERT.

CONSTRUCTION NOTES:

1. PROTECT IN PLACE
2. SAWCUT, REMOVE AND DISPOSE OF EXISTING ASPHALT PAVEMENT.
3. SAWCUT, REMOVE AND DISPOSE OF EXISTING PCC CURB & GUTTER AND SIDEWALK.
4. CONSTRUCT 4" AC PAVEMENT COMAPCTED TO 95% ON 8" AGG BASE COMPACTED TO 95%.
5. CONSTRUCT PARALLEL APEX CURB RAMP PER DETAIL C-5.3.5.
6. CONSTRUCT TYPE 1 CURB AND GUTTER PER DETAIL C-5.1.3.
7. CONSTRUCT TYPE A SIDEWALK PER DETAIL C-5.2.2.
8. ADJUST EXISTING SANITARY SEWER MANHOLE RIM TO FINISH GRADE PER DETAIL C-2.1.3. AND C-2.1.5.
9. ADJUST EXISTING STORM DRAIN MANHOLE RIM TO FINISH GRADE PER DETAIL C-2.1.3. AND C-2.1.5.
10. ADJUST EXISTING WATER VALVE BOX RIM TO FINISH GRADE PER DETAIL C-3.1.6.
11. PROVIDE LICENSED SURVEYOR TO LOCATE AND REPLACE EXISTING SURVEY MONUMENT PER DETAIL C-5.5.3.
12. RECONSTRUCT EXISTING FENCE AS NECESSARY.
13. REMOVE, SALVAGE AND RELOCATE EXISTING STREET SIGN PER DETAIL C-5.4.1 and C-5.4.2.
14. PAINT DOUBLE 4" SOLID YELLOW LINE.
15. PAINT 8' CROSSWALK AND STOP BAR PER DETAIL C-5.4.3.
16. INSTALL 15" RCP STORM DRAIN PER DETAIL C-1.2.1.

Call before you Dig
Avoid cutting underground utility lines. It's costly.
Call 811 OR 1-800-227-2600

DESIGNED BY: BD/DA
DRAWN BY: BD
CHECKED BY: DLR
DWG NO.: LITTLECURB-BS1
SCALE (HORIZ): 1"=20'
SCALE (VERT): 1"=1'
PLOT DATE: 2015MAY011

CARSON CITY
PUBLIC WORKS DEPARTMENT
3505 BUTTI WAY CARSON CITY, NEVADA 89701
PH: 775-887-2355 FAX: 775-887-2112

PROFESSIONAL ENGINEER STATE OF NEVADA
DANIEL L. ROTTER
Exp. 12-31-15
CIVIL
N.o. 22071

REV.	DATE	DESCRIPTION	BY	APP'D

LITTLE LANE
2015 ROADWAY RECONSTRUCTION
PROJECT No. ST0006
LITTLE LANE
PLAN & PROFILE
STA 28+00 to STA 31+00

SHEET C6 OF 9

BID SET - NOT FOR CONSTRUCTION

I:\CAPITAL PROJECTS\Projects\ST0006-LittleLnSimprov\02.Design\DWG\littlecurb-bs1.dwg, 5/11/2015 10:53:54 AM, bdoyal

1. ALL WORK SHALL CONFORM TO THE "STANDARD SPECIFICATIONS FOR PUBLIC WORKS CONSTRUCTION" (SSPWC) AND THE "STANDARD DETAILS FOR PUBLIC WORKS CONSTRUCTION" (SDPWC) AS ADOPTED BY CARSON CITY. THE CONTRACTOR SHALL OBTAIN A PERMIT FOR PUBLIC WORKS CONSTRUCTION FROM THE CARSON CITY PERMIT CENTER PRIOR TO THE START OF CONSTRUCTION.

2. ALL TRAFFIC CONTROL AND BARRICADING WITHIN THE CARSON CITY RIGHT-OF-WAY SHALL CONFORM TO SECTION 100.33, 332.04 AND 332.05 OF THE STANDARD SPECIFICATIONS, PART 6 OF THE MANUAL ON UNIFORM TRAFFIC CONTROL DEVICES, LATEST EDITION, AND THE UNR T2 CENTER, TEMPORARY TRAFFIC CONTROL GUIDELINES LATEST EDITION. A TRAFFIC CONTROL PLAN MUST BE SUBMITTED AND APPROVED BY THE CARSON CITY ENGINEERING DIVISION PRIOR TO ANY STREET CLOSURES.

2. THE CONTRACTOR SHALL CALL UNDERGROUND SERVICE ALERT "CALL BEFORE YOU DIG" (811) OR (1-800-227-2600) AT LEAST TWO (2) WORKING DAYS PRIOR TO START OF CONSTRUCTION AND COMPLY WITH THE REQUIREMENTS OF NRS AND NAC 455 THROUGHOUT THE COURSE OF THE WORK. SEWER SERVICE LATERALS ARE NOT OWNED OR MARKED BY CARSON CITY.

3. THE CONTRACTOR SHALL CALL THE CARSON CITY ENGINEERING DIVISION (887-2300) TWO (2) WORKING DAYS PRIOR TO THE START OF CONSTRUCTION. THE CONTRACTOR SHALL CALL ONE (1) WORKING DAY PRIOR TO REQUIRED INSPECTIONS AND TESTING. THE REQUIRED INSPECTIONS AND TESTING ARE LISTED ON THE INSPECTION RECORD ISSUED WITH EACH PERMIT. THE CONTRACTOR MUST HAVE THE PERMIT NUMBER AND THE DESCRIPTION LISTED ON THE INSPECTION RECORD TO SCHEDULE REQUIRED INSPECTIONS AND TESTING. FOR CITY CONTRACTED PROJECTS, THE CONTRACTOR SHALL SCHEDULE INSPECTIONS PER THE CONTRACT DOCUMENTS.

4. FINAL INSPECTIONS WILL BE PERFORMED BY CARSON CITY ENGINEERING DIVISION ACCORDING TO THE CARSON CITY INSPECTIONS AND TESTING PROCEDURES. NOTE: THESE PROCEDURES REQUIRE SUBMITTAL OF RECORD DRAWING PRINTS BY THE CONTRACTOR AND 10 WORKING DAYS TO PREPARE A FINAL PUNCH LIST. ALL CONDITIONS OF THE FINAL INSPECTION MUST BE COMPLETED PRIOR TO FINAL ACCEPTANCE OR ANY APPROVAL OF A CERTIFICATE OF OCCUPANCY BY THE CARSON CITY ENGINEERING DIVISION.

5. MODIFICATIONS TO THE APPROVED PLANS REQUIRES REVIEW AND APPROVAL BY THE CARSON CITY ENGINEERING DIVISION. WORK PERFORMED WITHOUT WRITTEN APPROVAL BY CARSON CITY ENGINEERING WILL REQUIRE REMOVAL AT THE CONTRACTORS EXPENSE.

6. THE APPROVED PLAN, PERMIT AND INSPECTION RECORD MUST BE ON THE JOB SITE AT ALL TIMES.

7. PLAN APPROVAL FOR SEWER AND WATER CONSTRUCTION SHALL EXPIRE ONE YEAR FROM DATE OF APPROVAL UNLESS CONSTRUCTION HAS BEEN INITIATED. (CCMC 12.06.180F, 12.01.140D)

8. THE CONTRACTOR WILL BE SOLELY AND COMPLETELY RESPONSIBLE FOR ACQUIRING A STORMWATER DISCHARGE PERMIT FROM THE NEVADA DIVISION OF ENVIRONMENTAL PROTECTION (NDEP) INCLUDING DEVELOPING, SUBMITTING AND IMPLEMENTING A STORM WATER POLLUTION PREVENTION PLAN (SWPPP). THE CONTRACTOR SHALL DEVELOP, PLACE AND MAINTAIN STORM WATER PROTECTION DEVICES IN COMPLIANCE WITH THE NEVADA CONTRACTORS FIELD GUIDE FOR CONSTRUCTION SITE BEST MANAGEMENT PRACTICES (JUNE 2008).

NO.	REVISION	DATE	STANDARD DETAIL FOR PUBLIC WORKS CONSTRUCTION	SECTION CARSON CITY
1	NOTE 2	05/14	GENERAL NOTES	DRAWING NO. C-1.1.1
				DATE 5/2014
APPROVED BY:		05/14		

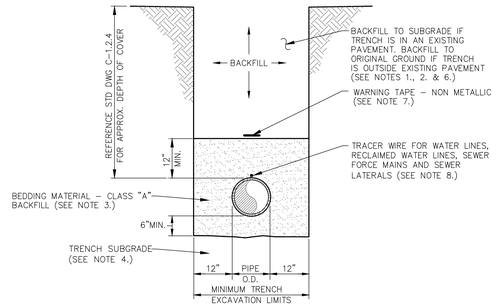

TYPICAL TRENCH SECTION

NTS

NOTES:

1. WATER DENSIFIED BACKFILL AND TUNNELING SHALL BE BY SPECIAL PROVISION ONLY.
2. BACKFILL SHALL CONFORM TO THE REQUIREMENTS OF CLASS E BACKFILL AS SPECIFIED IN SUBSECTION 200.03.06 OF THE SSPWC. MATERIAL SHALL BE PLACED IN LIFT THICKNESS SPECIFIED IN SUBSECTION 305.10 OF THE SSPWC AND DENSIFIED TO 90% RELATIVE COMPACTION.
3. BEDDING SHALL CONFORM TO THE REQUIREMENTS OF CLASS A BACKFILL AS SPECIFIED IN SUBSECTION 200.03.02 OF THE SSPWC. MATERIAL SHALL BE DENSIFIED TO 90% RELATIVE COMPACTION.
4. PLANS SHALL INCLUDE A DETAIL FOR SUBGRADE STABILIZATION INCLUDING BACKFILL MATERIAL, STRUCTURAL GEOTEXTILE FILTER FABRIC AND MODIFIED CUTOFF COLLARS WHEN POTENTIAL FOR UNSTABLE SUBGRADES EXIST, SUBJECT TO THE APPROVAL OF THE CARSON CITY ENGINEER OR PUBLIC WORKS DIRECTOR.
5. FOR TRENCHES IN ROADWAY SECTION, SEE PAVEMENT PATCH DETAIL (DWG. No. C-5.1.6).
6. FOR THE PURPOSE OF PAYMENT; EXCAVATION AND BACKFILL QUANTITIES ARE BASED ON THESE STANDARD DRAWINGS, AND NO ADDITIONAL COMPENSATION WILL BE MADE. SHORING OR SLOPED CUT SLOPES MAY BE NECESSARY, BUT THERE WILL BE NO ADDITIONAL PAYMENT. ALL EXCAVATIONS SHALL CONFORM TO THE LATEST O.S.H.A. REQUIREMENTS.
7. PLACE NON METALLIC WARNING TAPE 1 FOOT ABOVE ALL BURIED PIPES AND CONDUITS.
8. TRACER WIRE SHALL BE 12 GAUGE (MINIMUM THICKNESS) INSULATED SOLID COPPER OR COPPER-CLAD STEEL CORE WIRE. INSULATION SHALL BE 30 MIL HDPE. PLANS SHALL SPECIFY WIRE STRENGTH AND INSULATION THICKNESS FOR BORING APPLICATIONS. SPLICES SHALL BE CONNECTED BY WIRE NUTS, SEALED WITH AQUA SEAL OR SILICON FILLED, AND DOUBLE WRAPPED WITH U/L LISTED ELECTRICAL TAPE. TRACER WIRE COLOR SHALL BE, BLUE FOR WATER, PURPLE FOR RECLAIMED WATER, AND GREEN FOR SEWER.

NO.	REVISION	DATE	STANDARD DETAIL FOR PUBLIC WORKS CONSTRUCTION	SECTION CARSON CITY
			TRENCH EXCAVATION AND BACKFILL	DRAWING NO. C-1.2.1 (305)
				DATE 7/2009
APPROVED BY:		7/09		

1. ALL SEWER MAINS AND LATERALS IN THE RIGHT-OF-WAY/EASEMENT SHALL BE PVC SDR35 UNLESS OTHERWISE NOTED.
2. NON-FLEXIBLE TRANSITION COUPLINGS ARE REQUIRED WHEN CONNECTING NEW SEWER LINES TO EXISTING LINES AND/OR FITTINGS, SEE DWG. C-2.1.6.
3. THE CONTRACTOR SHALL INSTALL A PLUG AT THE POINT OF EXTENSION OF A SEWER MAIN PRIOR TO THE START OF CONSTRUCTION. THE PLUG SHALL REMAIN IN PLACE UNTIL ALL LINES HAVE BEEN INSPECTED, TESTED, CLEANED AND FLUSHED. REMOVAL OF THE PLUG BY THE CONTRACTOR PRIOR TO APPROVAL IS A VIOLATION OF THE CARSON CITY MUNICIPAL CODE AND MAY RESULT IN FINES UP TO $1,000 A DAY.
4. SEWER LINES SHALL BE TESTED PER SECTION 336.03.07 OF THE SSPWC AS ADOPTED BY CARSON CITY. AN AIR PRESSURE TEST PER SECTION 336.03.07.04 AND A DEFLECTION TEST PER SECTION 336.03.09 OF THE CARSON CITY AMENDMENT TO THE SSPWC SHALL BE PERFORMED ON ALL SEWER LINES.
5. MARKING TAPE SHALL BE INSTALLED 12 INCHES ABOVE ALL SEWER MAINS AND LATERALS. TAPE WIDTH SHALL BE 3 INCHES; THICKNESS SHALL BE FOUR 4 MIL OR GREATER AND SHALL BE GREEN AND BEAR LARGE PRINTING DENOTING "CAUTION BURIED SEWER LINE BELOW" OR EQUIVALENT WORDING.
6. TRACER WIRE SHALL BE ATTACHED TO ANY SEWER LATERAL WHICH IS NOT PERPENDICULAR TO THE SEWER MAIN. SEE DWG C-2.2.1

NO.	REVISION	DATE	STANDARD DETAIL FOR PUBLIC WORKS CONSTRUCTION	SECTION CARSON CITY
			SEWER GENERAL NOTES	DRAWING NO. C-2.1.1 (204, 306, 323)
				DATE 7/2009
APPROVED BY:		07/09		

1. MANHOLE BASE(S) SHALL BE PRECAST UNLESS OTHERWISE APPROVED BY CARSON CITY PUBLIC WORKS. NO FIELD MODIFICATIONS TO PRECAST BASES WILL BE ALLOWED. TROUGHS AND BENCHES TO BE CAST IN BASE(S) AT PRECAST FACTORY. BASE CONFIGURATION TO BE INSTALLED AS SHOWN ON THE APPROVED PLANS. NO PLUGGING OR FIELD MODIFYING ALLOWED.
2. PRECAST MANHOLE COMPONENTS SHALL CONFORM TO ASTM C-478.
3. ARRANGE MANHOLE SECTION LENGTHS TO FIT DEPTH. ALL SHIMS TO BE REMOVED AND VOIDS GROUTED.
4. PIPES SHALL NOT PROTRUDE MORE THAN 3 INCHES INSIDE MANHOLE SECTION, AS MEASURED FROM THE INSIDE WALL AT THE SPRING LINE OF THE PIPE.
5. MANHOLE MATERIALS AND CONSTRUCTION SHALL CONFORM TO THE REQUIREMENTS OF SECTION 204 "MANHOLES AND CATCH BASINS" OF THE STANDARD SPECIFICATIONS.
6. PRECAST MANHOLE SECTIONS, OTHER THAN GRADE RINGS, SHALL BE JOINED WITH FLEXIBLE PLASTIC GASKET MATERIAL SUCH AS "RAM-NEK" OR EQUAL AS PER MANUFACTURER'S RECOMMENDATIONS.
7. EXCAVATION AND BACKFILL SHALL BE AS SPECIFIED FOR "TRENCH EXCAVATION AND BACKFILL" IN SECTION 305 OF THE STANDARD SPECIFICATIONS. (SEE C-1.2.1)
8. NO SEWER LINE PIPE WITH A DIAMETER OF LESS THAN 8 INCHES SHALL BE CONNECTED TO A MANHOLE WITHOUT THE APPROVAL OF THE CITY ENGINEER OR PUBLIC WORKS DIRECTOR.
9. MATCH PIPE INVERTS TO MANHOLE INVERTS WHERE PIPES CONNECT TO MANHOLE BASE.
10. ALL MANHOLES SHALL BE SEALED WATERTIGHT. COVERS SHALL HAVE NO "THRU" HOLES. CLOSED PICK HOLES ONLY: SOUTH BAY FOUNDRY 1900 CPH OR APPROVED EQUAL.
11. COAT OUTSIDE OF SEWER MANHOLE WITH FLEXIBLE RUBBERIZED COATING WHEN GROUNDWATER IS ENCOUNTERED.
12. PRIOR TO BACKFILLING, ALL MANHOLES SHALL BE VACUUM TESTED PER THE REQUIREMENTS OF ASTM C-1244.
13. NO STEPS, LADDERS OR OTHER CLIMBING DEVICES SHALL BE INSTALLED IN MANHOLES.
14. MANHOLES LOCATED OUTSIDE PAVED AREAS SHALL REQUIRE ALL WEATHER ACCESS ROADWAY CONSISTING OF 6 INCH TYPE 2, CLASS B AGGREGATE BASE (CONFORMING TO THE SSPWC SECTION 200.01.02) AND SEWER MANHOLE MARKERS SHALL BE INSTALLED. SEWER MANHOLE MARKERS SHALL BE GREEN CARSONITE UTILITY MARKER (CUM 375), 5 FEET-2 INCHES (5'-2") WITH MANHOLE DECAL (668-MH) OR APPROVED EQUAL. PLACE MARKERS ON EASEMENT LINE NEAREST TO MANHOLE OR AS DIRECTED BY THE CARSON CITY ENGINEER OR PUBLIC WORKS DIRECTOR.
15. SEWER MANHOLES SHALL BE VACUUM TESTED PER SECTION 336.03.07.05 OF THE CARSON CITY AMENDMENT TO THE SSPWC, LATEST EDITION.
16. WHEN PIPE CONNECTIONS TO EXISTING MANHOLES ARE ALLOWED, THEY SHALL BE MADE BY CORE DRILLING THE MANHOLE AND CONNECTING THE PIPE PENETRATION WITH AN NPC KOR-N-SEAL PIPE-TO-MANHOLE CONNECTOR OR A LINK-SEAL MODULAR SEAL.

NO.	REVISION	DATE	STANDARD DETAIL FOR PUBLIC WORKS CONSTRUCTION	SECTION CARSON CITY
1	NOTE 16	6/12	SEWER MANHOLE NOTES	DRAWING NO. C-2.1.2 (204,306,323)
				DATE 7/2009
APPROVED BY:		07/09		

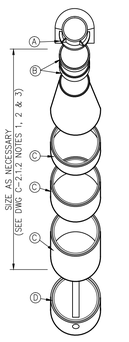

EXPLODED VIEW

NTS

SYM	ITEM
A	FRAME & COVER
B	PRECAST GRADE ADJUSTING RING
C	PRECAST MANHOLE SECTION
D	PRECAST BASE SECTION

TAPER	HEIGHT
DIA.	H
48"	24"MIN.
60"	48"MIN.

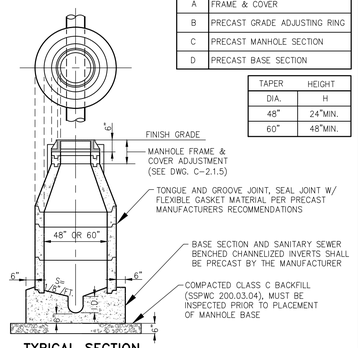

TYPICAL SECTION

NTS

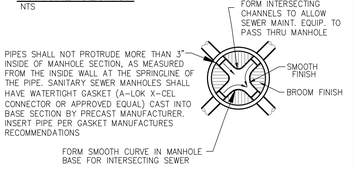

PLAN VIEW-BASE

NTS

NO.	REVISION	DATE	STANDARD DETAIL FOR PUBLIC WORKS CONSTRUCTION	SECTION CARSON CITY
			MANHOLE TYPE 1	DRAWING NO. C-2.1.3 (204, 306)
				DATE 7/2009
APPROVED BY:		07/09		

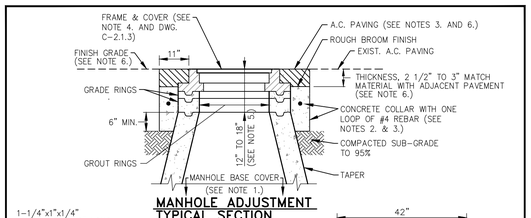

MANHOLE ADJUSTMENT TYPICAL SECTION

NTS

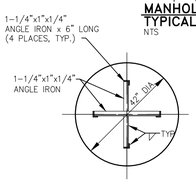

SECTION A-A

NTS

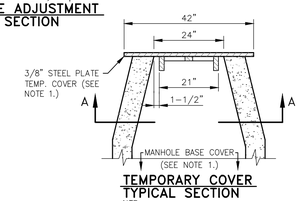

TEMPORARY COVER TYPICAL SECTION

NTS

NOTES:

1. INSTALL TEMPORARY COVER WITH CONE INSTALLATION WHEN INSTALLING NEW MANHOLE OR PRIOR TO REMOVING EXISTING FRAME & COVER AND GRADE RINGS TO ADJUST TO FINISH GRADE. INSTALL COVER OVER MANHOLE BASE TO PREVENT DEBRIS FROM ENTERING SEWER SYSTEM. THE MANHOLE BASE COVER SHALL BE IN PLACE PRIOR TO PERFORMING ANY ADJUSTMENTS OR GROUTING AND SHALL REMAIN IN PLACE WHILE ADJUSTMENTS OR GROUTING ARE BEING PERFORMED. REMOVE BASE COVER UPON ADJUSTMENT APPROVAL BY CARSON CITY.
2. CONCRETE SHALL CONFORM TO THE SSPWC SECTION 202.01.12. REBAR SHALL BE USED ONLY WHEN THE MANHOLE IS LOCATED OUTSIDE PAVED AREAS.
3. THE CONCRETE COLLAR SHALL BE LEFT 2 1/2 INCHES TO 3 INCHES BELOW FINISHED ASPHALT SURFACE. APPLY AN APPROVED TACK COAT (CONFORMING TO THE SSPWC SECTION 316) AND FILL VOID BETWEEN ADJACENT PAVEMENT AND FRAME WITH TYPE 3 AC 20 PAVING (CONFORMING TO THE SSPWC SECTION 320). APPLY FOG SEAL (CONFORMING TO SSPWC SECTION 317) TO THE ASPHALT SURFACE. ALL CUTS IN PAVING SHALL BE STRAIGHT AND EVEN. EXCEPTION: WHEN STRUCTURE NOT LOCATED IN ASPHALT PAVEMENT OR LOCATED IN AN UNPAVED AREA, EXTEND CONCRETE TO FINISH GRADE.
4. INSTALL NEW FRAME & COVER UNLESS OTHERWISE SHOWN ON THE PLANS OR SPECIAL CONDITIONS. FRAME & COVER SHALL BE SET FLUSH WITH FINISH GRADE UNLESS OTHERWISE NOTED.
5. FOR NEW MANHOLE INSTALLATIONS, DISTANCE FROM COVER TO CONE SHALL BE 12 INCHES MINIMUM AND 15 INCHES MAXIMUM FOR MINOR RESIDENTIAL STREETS AND 15 INCHES MINIMUM AND 18 INCHES MAXIMUM FOR ALL OTHER STREETS. FOR ADJUSTING EXISTING FRAME & COVERS THE DISTANCE FROM COVER TO CONE SHALL NOT EXCEED 18 INCHES.
6. WHEN LOCATED IN NDOT RIGHT-OF-WAY, CONCRETE COLLAR SHALL CONFORM TO NDOT STANDARD PLAN SHT R-4.7.3 AND STANDARD SPECIFICATION 609.

NO.	REVISION	DATE	STANDARD DETAIL FOR PUBLIC WORKS CONSTRUCTION	SECTION CARSON CITY
			MANHOLE FRAME & COVER ADJUSTMENT	DRAWING NO. C-2.1.5 (204, 323)
				DATE 7/2009
APPROVED BY:		7/09		

1. WATER MAIN SHUTDOWNS/INTERRUPTION OF WATER/FIRE SERVICE; OBTAIN TENTATIVE APPROVAL FROM CARSON CITY WATER UTILITY PRIOR TO PLANNING A SHUTDOWN. APPROVAL IS REQUIRED ONE WORKING DAY PRIOR TO NOTIFICATION OF CUSTOMERS. COMMERCIAL CUSTOMERS SHALL RECEIVE 2 WORKING DAYS WRITTEN AND VERBAL NOTICE OF A SHUTDOWN. SPECIAL ARRANGEMENTS INCLUDING NIGHT TIME SHUTDOWNS MAY BE REQUIRED OF THE CONTRACTOR TO ACCOMMODATE CUSTOMER OPERATIONS. RESIDENTIAL CUSTOMERS SHALL RECEIVE 24 HOURS WRITTEN NOTICE. WHEN WORK IS PERFORMED BY CITY STAFF, THE CITY IS RESPONSIBLE FOR THE NOTIFICATION. THE CONTRACTOR IS RESPONSIBLE IN ALL OTHER CASES. A LIST SHALL BE KEPT BY THE RESPONSIBLE PARTY LISTING THE DATE, TIME AND ADDRESS OF ALL PERSONS NOTIFIED. THE PERSON NOTIFIED SHALL BE INCLUDED ON THE LIST FOR ALL COMMERCIAL CUSTOMERS. CONTACT CARSON CITY WATER UTILITY FOR PHONE NUMBERS WHEN COMMERCIAL CUSTOMERS CANNOT BE LOCATED. THE CONTRACTOR WILL BE SUBJECT TO DAMAGE CLAIMS SHOULD THEY FAIL TO NOTIFY CUSTOMERS OR MAINTAIN DOCUMENTATION OF NOTIFICATION OF CUSTOMERS. THE TOTAL TIME OF WATER SERVICE INTERRUPTION IS LIMITED TO 4 HOURS MAXIMUM. THE CONTRACTOR SHALL NOT OPERATE ANY EXISTING WATER VALVES. WATER MAIN SHUTDOWNS WILL ONLY BE SCHEDULED FOR TUESDAYS, WEDNESDAYS, OR THURSDAYS, EXCLUDING THE WORKING DAYS BEFORE AND AFTER A HOLIDAY. CONTRACTOR SHALL MAKE A WRITTEN REQUEST, TO THE WATER OPERATIONS CHIEF, A MINIMUM OF 10 CALENDAR DAYS IN ADVANCE OF ANY PLANNED SHUTDOWN.
2. WATER MAINS (6 INCH THRU 12 INCH) SHALL BE PVC C900, DR 18 (MINIMUM WALL THICKNESS) UNLESS HIGHER PRESSURE IS SPECIFIED ON THE PLANS. WATER SERVICES 2 INCHES OR LESS SHALL BE CTS, PE TUBING MINIMUM 200 PSI; WATER SERVICES 3 INCHES OR GREATER SHALL BE 4 INCH MINIMUM DIAMETER PVC C900, DR 18 OR AS SPECIFIED ON THE PLANS.
3. MAINTAIN 18 INCHES VERTICAL AND 5 FEET HORIZONTAL SEPARATION BETWEEN ALL UNDERGROUND UTILITY LINES AND WATER LINES. IF WATER LINE IS BELOW POWER LINE OR IS WITHIN 18 INCH VERTICAL SEPARATION OF POWER LINE, POWER/TELEPHONE LINE SHALL BE ENCASED WITH 4 INCHES MINIMUM OF CONCRETE EXTENDING 5 FEET EACH SIDE OF CROSSING. (SEE NV ENERGY SPECS.) CONCRETE ENCASEMENT OF WATER LINES IS NOT ALLOWED.
4. ALL HOT TAPS, GREATER THAN 2 INCHES AND LESS THAN 12 INCHES, ARE TO BE PERFORMED BY CARSON CITY WATER UTILITY. THE CONTRACTOR SHALL CONTACT THE WATER OPERATIONS CHIEF AT LEAST 2 WORKING DAYS PRIOR TO SCHEDULING HOT TAP DATE AND TIME (HOT TAPS ARE PERFORMED TUESDAY THRU THURSDAY EXCLUDING THE WORKING DAYS BEFORE AND AFTER A HOLIDAY). PRIOR TO HOT TAPPING, THE SADDLE SHALL BE HYDROSTATICALLY PRESSURE TESTED TO 150 PSI MINIMUM OR THE DESIGN OF PIPE SYSTEM FOR A MINIMUM OF 5 MINUTES. THE TEST SHALL BE PERFORMED IN THE PRESENCE OF THE WATER UTILITY PERSONNEL PRIOR TO PERFORMING THE TAP. ALL TAPPING EQUIPMENT SHALL BE DISINFECTED AND INSPECTED BY CITY FORCES PRIOR TO TAPPING A CITY MAIN.
5. WATER VALVE MARKERS SHALL BE BLUE CARSONITE UTILITY MARKER (CUM-375), 5 FEET-2 INCHES (5'-2") WITH CARSON CITY WATER VALVE DECAL (CWV-116) OR APPROVED EQUAL. PLACE MARKER NO MORE THAN 5 FEET FROM THE VALVE OR AS DIRECTED BY THE CARSON CITY INSPECTOR.
6. REDUCED PRESSURE PRINCIPLE AND DOUBLE CHECK VALVE BACKFLOW ASSEMBLIES SHALL BE APPROVED BY THE CARSON CITY INSPECTOR, AND TESTED BY A CERTIFIED BACKFLOW ASSEMBLY TESTER, AND TEST RESULTS SHALL BE APPROVED BY CARSON CITY WATER UTILITY. FOR NEW WATER METER SETS, THE REQUIRED BACKFLOW PREVENTION ASSEMBLY SHALL BE INSTALLED, INSPECTED, APPROVED AND CERTIFIED TEST RESULTS PROVIDED TO THE CARSON CITY INSPECTOR WITHIN 5 DAYS OF METER SET, UNLESS THE CARSON CITY ENGINEER OR PUBLIC WORKS DIRECTOR APPROVES OTHERWISE. THE SERVICE WILL BE LOCKED OFF IF INSPECTIONS AND CERTIFICATIONS ARE NOT COMPLETED AS SPECIFIED ABOVE. A 25 DOLLAR FEE WILL BE ASSESSED AT TIME OF TURN-ON WHEN LOCK IS REMOVED DURING NORMAL WORKING HOURS. THE FEE WILL BE ASSESSED ON THE BUILDING PERMIT FOR THE INSTALLATION OF THE BACKFLOW DEVICE.
7. ALL WATER MAIN, WATER/FIRE SERVICE, AND BACKFLOW PREVENTION INSPECTIONS AND TESTING MUST BE APPROVED PRIOR TO APPROVAL OF ANY CERTIFICATE OF OCCUPANCY.
8. DISINFECTION TABLETS SHALL BE PLACED USING TITEBOND MULTI-PURPOSE CLEAR 100% SILICONE OR APPROVED EQUAL FOOD GRADE SILICONE

NO.	REVISION	DATE	STANDARD DETAIL FOR PUBLIC WORKS CONSTRUCTION	SECTION CARSON CITY
1	NOTE 4	05/14	WATER GENERAL NOTES	DRAWING NO. C-3.1.1 (307)
				DATE 5/2014
APPROVED BY:		05/14		

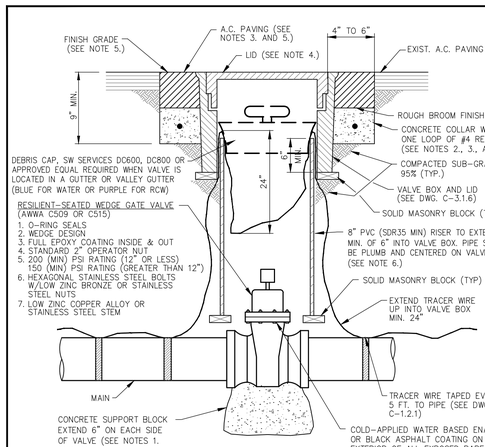

TYPICAL SECTION

NTS

NOTES:

1. SUPPORT BLOCKING SHALL BE POURED AGAINST UNDISTURBED SOIL AND NOT PREVENT ACCESS TO BOLT ASSEMBLY OR VALVE JOINTS.
2. CONCRETE SHALL CONFORM TO THE SSPWC SECTION 337.10. REBAR SHALL ONLY BE USED WHEN THE VALVE BOX IS LOCATED OUTSIDE PAVED AREAS.
3. THE CONCRETE COLLAR SHALL BE LEFT 2 1/2 INCHES – 3 INCHES BELOW FINISHED ASPHALT SURFACE. APPLY AN APPROVED TACK COAT (CONFORMING TO THE SSPWC SECTION 316) AND FILL VOID BETWEEN ADJACENT PAVEMENT AND FRAME WITH TYPE 3 PG 64-22 PAVING (CONFORMING TO THE SSPWC SECTION 320). APPLY FOG SEAL (CONFORMING TO THE SSPWC SECTION 317) TO THE ASPHALT SURFACE. ALL CUTS IN PAVING SHALL BE STRAIGHT AND EVEN. EXCEPTION: WHEN STRUCTURE NOT LOCATED IN ASPHALT PAVEMENT OR IN AN UNPAVED AREA, EXTEND CONCRETE TO FINISH GRADE.
4. LIDS SHALL BE SET FLUSH WITH FINISH GRADE UNLESS OTHERWISE NOTED.
5. WHEN LOCATED IN NDOT RIGHT-OF-WAY, CONCRETE COLLAR SHALL CONFORM TO NDOT STANDARD PLAN SHT R-4.3.3 AND STANDARD SPECIFICATION 609.
6. RISER COLOR SHALL BE BLUE, OR SAME COLOR AS MAIN FOR WATER APPLICATIONS, PURPLE FOR RECLAIMED WATER APPLICATIONS, AND GREEN FOR SANITARY SEWER APPLICATIONS.
7. VALVES ON FIRE LINES SHALL BE UL/FM APPROVED AND MEET ALL APPLICABLE NFPA REQUIREMENTS.

NO.	REVISION	DATE	STANDARD DETAIL FOR PUBLIC WORKS CONSTRUCTION	SECTION CARSON CITY
			GATE VALVE	DRAWING NO. C-3.1.4 (203,307)
				DATE 7/2009
APPROVED BY:		07/09		

DESIGNED BY: BD/DA
DRAWN BY: BD
CHECKED BY: DLR
DWG NO.: LITTLECURB-BS1
SCALE (HORIZ): N/A
SCALE (VERT): N/A
PLOT DATE: 2015MAY011

CARSON CITY
PUBLIC WORKS DEPARTMENT
3505 BUTTI WAY CARSON CITY, NEVADA 89701
PH: 775-887-2355 FAX: 775-887-2112

PROFESSIONAL ENGINEER STATE OF NEVADA
DANIEL L. ROTTER
Exp. 12-31-15
CIVIL
No. 22071

REV.	DATE	DESCRIPTION	BY	APP'D

LITTLE LANE
2015 ROADWAY RECONSTRUCTION
PROJECT No. ST0006
LITTLE LANE
PLAN & PROFILE
STA 28+00 to STA 31+00

SHEET C7 OF 9

BID SET - NOT FOR CONSTRUCTION

I:\CAPITAL PROJECTS\Projects\ST0006 LittleLaSimpson\02.Design\DWG\littlecurb-bs1.dwg, 5/11/2015 10:52:56 AM, bdayal

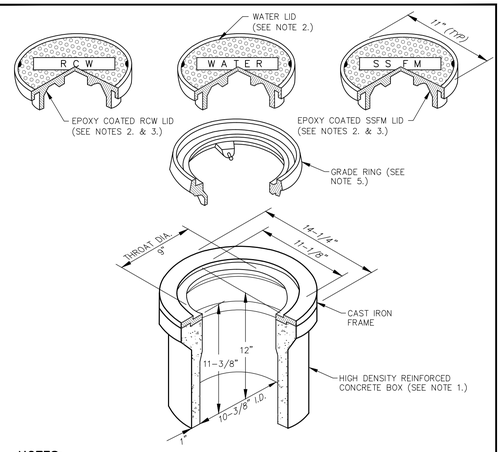

NOTES:

1. VALVE BOX AND LID SHALL BE H20 TRAFFIC RATED WITH A MINIMUM INSIDE DIAMETER OF 10 INCHES (CHRISTY G5 TRAFFIC VALVE BOX & LID).
2. CAST IRON LID SHALL BE MARKED AT THE FACTORY "WATER" FOR WATER APPLICATIONS, "RECLAIMED WATER" OR "RCW" FOR RECLAIMED WATER APPLICATIONS, AND "SS FORCE MAIN" OR "SSFM" FOR SANITARY SEWER APPLICATIONS.
3. FOR RECLAIMED WATER AND SANITARY SEWER APPLICATIONS, CAST IRON LID SHALL BE EPOXY COATED AT THE FACTORY, OR POWDER COATED, COLOR SHALL BE PURPLE FOR RECLAIMED WATER APPLICATIONS AND GREEN FOR SANITARY SEWER APPLICATIONS.
4. VALVE BOX SHALL BE SET OR ADJUSTED TO GRADE PER DRAWING NO. C-3.1.4, RISER FOR ADJUSTED VALVE BOX SHALL BE PER DRAWING NO. C-3.1.4. FOR OVERLAY ADJUSTMENTS, RISER WILL NOT REQUIRE REPLACEMENT OR EXTENSION IF IT EXTENDS A MINIMUM OF 2 INCHES INTO ADJUSTED VALVE BOX.
5. GRADE RING IS NOT ALLOWED FOR NEW VALVE BOX INSTALLATIONS. CAST IRON GRADE RING (CHRISTY G5 GRADE RING) MAY BE USED FOR OVERLAY ADJUSTMENTS WHEN OVERLAY DEPTH EQUALS THE GRADE RING DEPTH. NO MORE THAN ONE GRADE RING ALLOWED PER BOX.

NO.	REVISION	DATE	STANDARD DETAIL FOR PUBLIC WORKS CONSTRUCTION	SECTION
			VALVE BOX & LID	CARSON CITY
				DRAWING NO. C-3.1.6 (203,306,307)
APPROVED BY:		07/09		DATE 7/2009

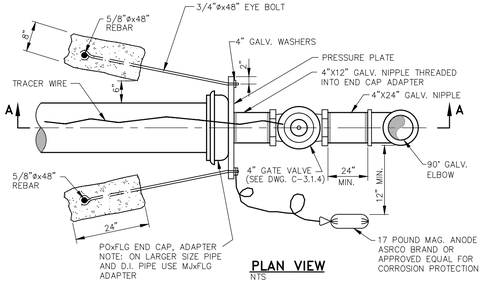

PLAN VIEW
NTS

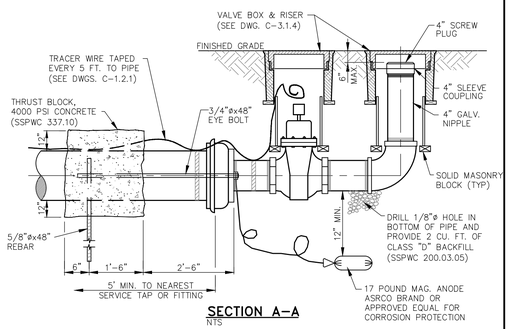

SECTION A-A
NTS

NO.	REVISION	DATE	STANDARD DETAIL FOR PUBLIC WORKS CONSTRUCTION	SECTION
			FLUSH ASSEMBLY PERMANENT	CARSON CITY
				DRAWING NO. C-3.1.12 (203,307)
APPROVED BY:		07/09		DATE 7/2009

1. MANHOLE MATERIALS AND CONSTRUCTION SHALL CONFORM TO THE REQUIREMENTS OF SECTION 204 "MANHOLES AND CATCH BASINS" OF THE SSPWC.
2. MARKING TAPE SHALL BE INSTALLED 12 INCHES ABOVE ALL STORM DRAIN PIPE. TAPE WIDTH SHALL BE 3 INCHES; THICKNESS SHALL BE FOUR (4) MIL OR GREATER AND SHALL BE GREEN AND BEAR LARGE PRINTING DENOTING "CAUTION BURIED STORM DRAIN LINE BELOW" OR EQUIVALENT WORDING.
3. PORTLAND CEMENT CONCRETE (P.C.C.) SHALL HAVE THE FOLLOWING CHARACTERISTICS: 4000 PSI MIN. COMPRESSIVE STRENGTH @ 28 DAYS, (CURB AND GUTTER TRANSITION ONLY, ALL UNEXPOSED CONCRETE MAY BE 3000 PSI) MIN. 6 SACKS OF CEMENT PER CUBIC YARD WITH A MAX. WATER/CEMENT RATIO OF 0.45, AIR ENTRAINMENT 6% ±1.5%, SLUMP AT 1 TO 4 INCHES. ALL MATERIALS SHALL CONFORM TO SSPWC SECTION 202.
4. REINFORCING STEEL SHALL BE GRADE 40 AND HAVE 1.5 INCHES MINIMUM CLEAR COVER.
5. EACH CATCH BASIN SHALL HAVE A 4 INCH ALUMINUM BLUE DISK WITH FISH IMAGE AND THE WORDS "NO DUMPING! DRAINS TO RIVER" (ALMETEK SD-4 OR APPROVED EQUAL) INSTALLED ON THE TOP OF THE CURB BOX.
6. FRAMES AND GRATES SHALL BE MATCHED TO ACHIEVE A CLOSE TOLERANCE FIT, WITH MINIMAL GAPS, AS APPROVED BY THE CARSON CITY ENGINEER OR PUBLIC WORKS DIRECTOR.
7. STORM DRAINAGE IMPROVEMENTS SHALL INCORPORATE WATER QUALITY AND EROSION CONTROLS IN ACCORDANCE WITH THE NEVADA "HANDBOOK OF BEST MANAGEMENT PRACTICES".
8. PRECAST MANHOLES SECTIONS, OTHER THAN GRADE RINGS, SHALL BE JOINED WITH FLEXIBLE PLASTIC GASKET MATERIAL SUCH AS RAM-NEK OR APPROVED EQUAL PER MANUFACTURERS RECOMMENDATIONS.
9. TRACER WIRE SHALL BE ATTACHED TO ANY STORM DRAIN LATERAL WHICH IS NOT PERPENDICULAR TO THE STORM DRAIN MAIN.
10. MANHOLES LOCATED OUTSIDE PAVED AREAS SHALL REQUIRE ALL WEATHER ACCESS ROADWAY CONSISTING OF 6 INCHES TYPE 2, CLASS B AGGREGATE BASE (CONFORMING TO THE SSPWC SECTION 200.01.02) AND STORM DRAIN MANHOLE MARKERS BE INSTALLED. STORM DRAIN MANHOLE MARKERS SHALL BE GREEN CARSONITE UTILITY MARKER (CUM 375), 5 FEET-2 INCHES (5'-2") WITH DECAL READING "STORM DRAIN MANHOLE". PLACE MARKERS ON EASEMENT LINE NEAREST TO MANHOLE OR AS DIRECTED BY THE CARSON CITY ENGINEER OR PUBLIC WORKS DIRECTOR.
11. MANHOLE CONCRETE COLLARS SHALL BE LEFT 2 1/2 INCHES TO 3 INCHES BELOW FINISHED ASPHALT SURFACE. APPLY AN APPROVED TACK COAT (CONFORMING TO THE SSPWC SECTION 316) AND FILL VOID BETWEEN ADJACENT PAVEMENT AND FRAME WITH TYPE 3 AC 20 PAVING (CONFORMING TO THE SSPWC SECTION 320). APPLY FOG SEAL (CONFORMING TO SSPWC SECTION 317) TO THE ASPHALT SURFACE. ALL CUTS IN PAVING SHALL BE STRAIGHT AND EVEN. EXCEPTION: WHEN STRUCTURE NOT LOCATED IN ASPHALT PAVEMENT OR LOCATED IN AN UNPAVED AREA, EXTEND CONCRETE TO FINISH GRADE.
12. GRATES SHALL BE PLACED OUTSIDE OF THE PEDESTRIAN TRAVELED WAY. GRATE OPENINGS SHALL NOT EXCEED 0.5 INCHES IN WIDTH OR 4 INCHES IN LENGTH. GRATES SHALL BE TRAFFIC RATED AND ADA COMPLIANT.

NO.	REVISION	DATE	STANDARD DETAIL FOR PUBLIC WORKS CONSTRUCTION	SECTION
			STORM DRAIN GENERAL NOTES	CARSON CITY
				DRAWING NO. C-4.1.1
APPROVED BY:		7/09		DATE 7/2009

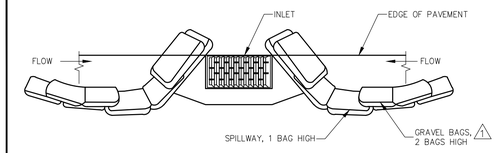

TYPICAL PROTECTION FOR INLET ON SUMP
NTS

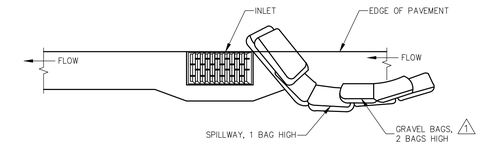

TYPICAL PROTECTION FOR INLET ON GRADE
NTS

NOTES:

1. INTENDED FOR TEMPORARY SHORT-TERM USE.
2. USE TO MANAGE CURB WATER FLOW.
3. SEDIMENT CAPTURED BEHIND GRAVEL BAGS SHALL BE REMOVED WEEKLY DURING CONSTRUCTION.
4. INLET PROTECTION MUST BE PROPERLY MAINTAINED WHILE IN PLACE AND REMOVED WHEN REQUIREMENTS OF NDEP PERMIT HAVE BEEN MET.
5. GRAVEL BAGS SHALL BE FILLED WITH 3/4 INCH WASHED ROCK.

NO.	REVISION	DATE	STANDARD DETAIL FOR PUBLIC WORKS CONSTRUCTION	SECTION
1	GRAVEL BAG	05/14	**STORM DRAIN INLET PROTECTION**	CARSON CITY
				DRAWING NO. C-4.1.7
APPROVED BY:		05/14		DATE 5/2014

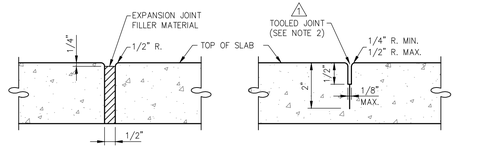

EXPANSION/ISOLATION JOINT

WEAKENED PLANE JOINT SIDEWALK, CURB & GUTTER

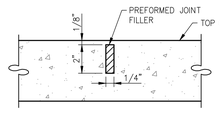

WEAKENED PLANE JOINT P.C.C. PAVEMENT

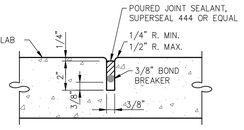

SAWED OR PREFORMED STRIP JOINT

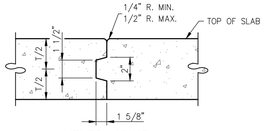

KEYED JOINT

NOTES:

1. ALL CONCRETE EDGING AND JOINTING SHALL CONFORM TO SECTION 312.09 OF THE STANDARD SPECIFICATIONS FOR PUBLIC WORKS CONSTRUCTION (SSPWC).
2. (1) AFTER PRELIMINARY TROWELING, THE CONCRETE SHALL BE PARTED TO A DEPTH OF 2 INCHES WITH A STRAIGHTEDGE. THE CONCRETE SHALL THEN BE REFLOATED TO FILL THE PARTED JOINT WITH MORTAR. FINAL JOINT FINISHING SHALL BE ACCOMPLISHED WITH A JOINTER TOOL AS SHOWN. (SSPWC 312.09.02)

NO.	REVISION	DATE	STANDARD DETAIL FOR PUBLIC WORKS CONSTRUCTION	SECTION
1	REVISED JOINT ADDED NOTE 2	5/14	**P.C.C. JOINTING DETAILS**	CARSON CITY
				DRAWING NO. C-5.1.1 (312)
APPROVED BY:		5/14		DATE 5/2014

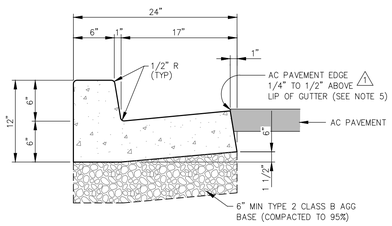

NOTES:

1. PORTLAND CEMENT CONCRETE (P.C.C.) SHALL HAVE THE FOLLOWING CHARACTERISTICS: SYNTHETIC FIBER-REINFORCEMENT (AT A MINIMUM OF 1 POUND PER CUBIC YARD), 4000 PSI MIN COMPRESSIVE STRENGTH @ 28 DAYS, MIN 6 SACKS OF CEMENT PER CUBIC YARD WITH A MAX. WATER/CEMENT RATIO OF 0.45, AIR ENTRAINMENT 6% ±1.5%, SLUMP AT 1 TO 4 INCHES ALL MATERIALS SHALL CONFORM TO SECTION 202 OF THE STANDARD SPECIFICATIONS FOR PUBLIC WORKS CONSTRUCTION.
2. ALL CONCRETE CURB & GUTTER SHALL HAVE 1/2 INCH EXPANSION JOINTS EVERY 30 FEET (UNLESS APPROVED OTHERWISE BY THE ENGINEER) AND AT ALL CURB RETURNS AND SHALL HAVE WEAKENED PLANE JOINTS EVERY 10 FEET. CONCRETE EDGING AND JOINTING SHALL BE CONSTRUCTED IN ACCORDANCE WITH STANDARD DETAIL C-5.1.1 AND CONFORM TO SECTION 312.09 OF THE STANDARD SPECIFICATIONS FOR PUBLIC WORKS CONSTRUCTION (SSPWC).
3. ALL AGGREGATE BASE SHALL BE TYPE 2, CLASS B AND CONFORM TO SECTION 200.01. OF THE STANDARD SPECIFICATIONS FOR PUBLIC WORKS CONSTRUCTION, AND SHALL BE MECHANICALLY COMPACTED TO 95% COMPACTION, IN CONFORMANCE WITH SECTION 308.05 OF THE STANDARD SPECIFICATIONS FOR PUBLIC WORKS CONSTRUCTION.
4. CURBS SHALL BE MARKED WITH A 2 INCH "S" ON THE TOP OF CURB AT SEWER LATERAL LOCATIONS.
5. (2) EXCEPTION: AC PAVEMENT EDGE SHALL BE FLUSH TO 1/4 INCH ABOVE THE LIP OF GUTTER WHEN LOCATED ADJACENT TO A PEDESTRIAN RAMP, WITHIN AN ACCESSIBLE ROUTE OR BIKE LANE.

NO.	REVISION	DATE	STANDARD DETAIL FOR PUBLIC WORKS CONSTRUCTION	SECTION
1	AC/LIP	06/12	**PCC CURB & GUTTER TYPE 1**	CARSON CITY
2	NOTE 5	05/14		DRAWING NO. C-5.1.3
APPROVED BY:		05/14		DATE 5/2014

1. NO CONCRETE SHALL BE PLACED UNTIL FORMS AND SUBGRADE ARE INSPECTED AND APPROVED BY CARSON CITY PUBLIC WORKS.
2. PORTLAND CEMENT CONCRETE (P.C.C.) SHALL HAVE THE FOLLOWING CHARACTERISTICS: SYNTHETIC FIBER-REINFORCEMENT (AT A MINIMUM OF 1 POUND PER CUBIC YARD), WITH COARSE AGGREGATE GRADATION CONFORMING TO SIZE No. 67 PER SECTION 200.05.03 OF THE STANDARD SPECIFICATIONS, AND SHALL HAVE A 1 TO 4 INCH SLUMP, AND 4 TO 7 PERCENT ENTRAINED AIR. 4000 PSI MIN COMPRESSIVE STRENGTH @ 28 DAYS, MIN 6 SACKS OF TYPE II CEMENT PER CUBIC YARD WITH A MAX. WATER/CEMENT RATIO OF 0.45, AIR ENTRAINMENT 6% ±1.5%, SLUMP AT 1 TO 4 INCHES ALL MATERIALS SHALL CONFORM TO SSPWC SECTION 202. OF THE STANDARD SPECIFICATIONS FOR PUBLIC WORKS CONSTRUCTION.
3. ALL CONCRETE EDGING AND JOINTING SHALL BE CONSTRUCTED IN ACCORDANCE WITH STD. DETAIL C-5.1.1 AND CONFORM TO SEC. 312.09 OF THE STANDARD SPECIFICATIONS FOR PUBLIC WORKS CONSTRUCTION (SSPWC).
4. IF OBSTRUCTIONS SUCH AS INLETS, UTILITY POLES, FIRE HYDRANTS, ETC. ARE ENCOUNTERED, THE LOCATION AND DIMENSIONS MAY BE ADJUSTED UPON APPROVAL BY CARSON CITY PUBLIC WORKS. A MINIMUM SURFACE OF 5 FEET X 5 FEET CLEAR IS REQUIRED WHEN DIRECTION OF TRAVEL MAY CHANGE AND A MINIMUM SURFACE OF 4 FEET CLEAR IS REQUIRED WHERE DIRECTION OF TRAVEL IS NOT EXPECTED TO CHANGE, UNLESS OTHERWISE APPROVED BY THE CARSON CITY ENGINEER OR PUBLIC WORKS DIRECTOR.
5. EXISTING CONCRETE SHALL BE REMOVED TO A NEAT SAWCUT LINE OR NEAREST EXPANSION JOINT.
6. ALL AGGREGATE BASE SHALL BE TYPE 2, CLASS B AND SHALL CONFORM TO SEC.200.01. OF THE STANDARD SPECIFICATIONS FOR PUBLIC WORKS CONSTRUCTION (SSPWC).
7. NEW CONCRETE SHALL HAVE A HEAVY BROOM FINISH PERPENDICULAR TO SIDEWALK.
8. (1) AC PAVEMENT EDGE SHALL BE 1/4 INCH TO 1/2 INCH ABOVE THE LIP OF GUTTER. EXCEPTION: AC PAVEMENT EDGE SHALL BE FLUSH TO 1/4 INCH ABOVE THE LIP OF GUTTER WHEN LOCATED ADJACENT TO A PEDESTRIAN RAMP, WITHIN AN ACCESSIBLE ROUTE OR BIKE LANE.

NO.	REVISION	DATE	STANDARD DETAIL FOR PUBLIC WORKS CONSTRUCTION	SECTION
1	NOTE 8	05/14	**SIDEWALK AND DRIVEWAY GENERAL NOTES**	CARSON CITY
				DRAWING NO. C-5.2.1
APPROVED BY:		05/14		DATE 5/2014

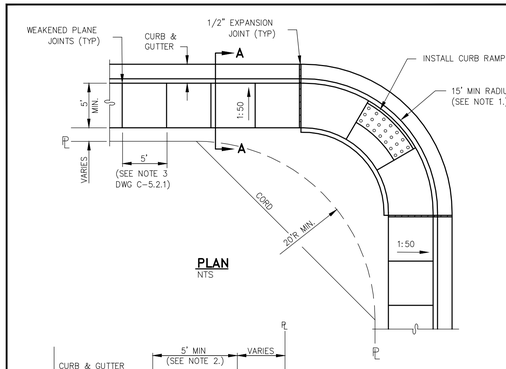

PLAN
NTS

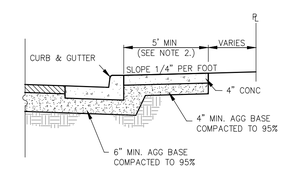

SECTION A-A
NTS

NOTES:

1. MINIMUM CURB RETURN RADIUS SHALL BE 15 FEET UNLESS OTHERWISE APPROVED BY THE CARSON CITY ENGINEER OR PUBLIC WORKS DIRECTOR.
2. SOME STREETS MAY REQUIRE WIDER SIDEWALKS.

NO.	REVISION	DATE	STANDARD DETAIL FOR PUBLIC WORKS CONSTRUCTION	SECTION
			TYPE "A" SIDEWALK	CARSON CITY
				DRAWING NO. C-5.2.2
APPROVED BY:		7/09		DATE 7/2009

DESIGNED BY: BD/DA
DRAWN BY: BD
CHECKED BY: DLR
DWG NO.: LITTLECURB-BS1
SCALE (HORIZ): N/A
SCALE (VERT): N/A
PLOT DATE: 2015MAY011

CARSON CITY PUBLIC WORKS DEPARTMENT
3505 BUTTI WAY CARSON CITY, NEVADA 89701
PH: 775-887-2355 FAX: 775-887-2112

PROFESSIONAL ENGINEER - STATE OF NEVADA
DANIEL L. ROTTER
Exp. 12-31-15
CIVIL
No. 22071

REV.	DATE	DESCRIPTION	BY	APP'D

LITTLE LANE
2015 ROADWAY RECONSTRUCTION
PROJECT No. ST0006
LITTLE LANE
PLAN & PROFILE
STA 28+00 to STA 31+00

SHEET
C8
OF
9

BID SET - NOT FOR CONSTRUCTION

I:\CAPITAL PROJECTS\Projects\ST0006-LittleLaSimpre\02.Design DWG\littlecurb-bs1.dwg, 5/11/2015 10:52:57 AM, bdayal

1. NO CONCRETE SHALL BE PLACED UNTIL FORMS AND SUBGRADE ARE INSPECTED BY CARSON CITY ENGINEERING DIVISION.
2. PORTLAND CEMENT CONCRETE (P.C.C.) SHALL HAVE THE FOLLOWING CHARACTERISTICS: SYNTHETIC FIBER-REINFORCEMENT (AT A MINIMUM OF 1 POUND PER CUBIC YARD), 4000 PSI MIN COMPRESSIVE STRENGTH @ 28 DAYS, MIN 6 SACKS OF CEMENT PER CUBIC YARDS WITH A MAX. WATER/CEMENT RATIO OF 0.45, AIR ENTRAINMENT 6% ±1.5%, SLUMP AT 1 TO 4 INCHES ALL MATERIALS SHALL CONFORM TO SSPWC SECTION 202. OF THE STANDARD SPECIFICATIONS FOR PUBLIC WORKS CONSTRUCTION.
3. ALL CONCRETE EDGING AND JOINTING SHALL BE CONSTRUCTED IN ACCORDANCE WITH STD. DETAIL C-5.1.1 AND CONFORM TO SEC. 312.09 OF THE STANDARD SPECIFICATIONS FOR PUBLIC WORKS CONSTRUCTION (SSPWC).
4. IF OBSTRUCTIONS SUCH AS INLETS, UTILITY POLES, FIRE HYDRANTS, ETC. ARE ENCOUNTERED, THE LOCATION AND DIMENSIONS MAY BE ADJUSTED UPON APPROVAL BY CARSON CITY ENGINEER OR PUBLIC WORKS DIRECTOR. A MINIMUM LANDING OF 5 FEET X 5 FEET CLEAR IS REQUIRED WHEN DIRECTION OF TRAVEL MAY CHANGE. A MINIMUM OF 4 FEET CLEAR IS MAY BE USED UPON APPROVAL OF THE CARSON CITY ENGINEER OR PUBLIC WORKS DIRECTOR WHERE DIRECTION OF TRAVEL IS NOT EXPECTED TO CHANGE.
5. WHEN A CROSSWALK IS SERVICED BY RAMP, LANDINGS SHALL BE CONTAINED WITHIN THE CROSSWALK AREA.
6. EXISTING CONCRETE SHALL BE REMOVED TO A NEAT SAWCUT LINE OR NEAREST EXPANSION JOINT.
7. PLANTMIX BITUMINOUS SURFACE SHALL BE FLUSH WITH THE EDGE OF THE GUTTER PAN IN THE AREA OF THE CURB RAMP. GUTTER SHALL MAINTAIN POSITIVE DRAINAGE TO PREVENT PONDING.
8. ALL AGGREGATE BASE SHALL BE TYPE 2, CLASS B AND SHALL CONFORM TO SEC.200.01. OF THE STANDARD SPECIFICATIONS FOR PUBLIC WORKS CONSTRUCTION (SSPWC).
9. NEW CONCRETE SHALL HAVE A HEAVY BROOM FINISH PERPENDICULAR TO SIDEWALK.
10. DETECTABLE WARNINGS SHALL BE EAST JORDAN IRON WORKS 7005 SERIES CAST IRON DETECTABLE WARNING PLATES OR APPROVED EQUAL. INSTALLED PER MANUFACTURERS INSTALLATION GUIDELINES AND CONFORM TO ADAAG (4.29) "DETECTABLE WARNINGS". COLOR: ASPHALT DIPPED UNLESS OTHERWISE APPROVED BY CARSON CITY ENGINEER OR PUBLIC WORKS DIRECTOR. RADIAL DETECTABLE WARNINGS SHALL BE USED WHEN REQUIRED TO MAINTAIN MINIMUM CLEARANCE OF 3 INCHES AND MAXIMUM CLEARANCE OF 8 INCHES FROM DETECTABLE WARNINGS TO BACK FACE OF CURB. RADIAL DETECTABLE WARNINGS SHALL HAVE A RADIUS WITHIN 5 FEET OF BACK FACE OF CURB RADIUS.
11. AC PAVEMENT EDGE SHALL BE 1/4 INCH TO 1/2 INCH ABOVE THE LIP OF GUTTER.
EXCEPTION: AC PAVEMENT EDGE SHALL BE FLUSH TO 1/4 INCH ABOVE THE LIP OF GUTTER WHEN LOCATED ADJACENT TO A PEDESTRIAN RAMP OR WITHIN AN ACCESSIBLE ROUTE.

NO.	REVISION	DATE	STANDARD DETAIL FOR PUBLIC WORKS CONSTRUCTION	SECTION CARSON CITY
1	NOTE 11	6/12	**CURB RAMP GENERAL NOTES**	DRAWING NO. C-5.3.1
				DATE 6/2012
APPROVED BY:		6/12		

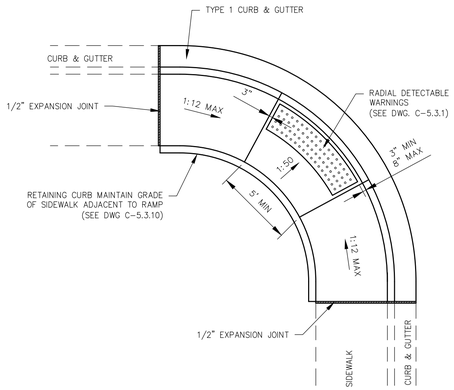

PLAN
NTS

NOTES:

1. NOT FOR USE WITH OFFSET SIDEWALKS.
2. RETAINING CURBS ARE TO BE USED IN ALL CASES AND FINISH GRADE AT BACK OF SIDEWALK IS TO BE RAISED TO TOP OF RETAINING CURB ELEVATION.
3. SEE "CURB RAMP GENERAL NOTES" DWG C-5.3.1 FOR FURTHER REQUIREMENTS.

NO.	REVISION	DATE	STANDARD DETAIL FOR PUBLIC WORKS CONSTRUCTION	SECTION CARSON CITY
			PARALLEL CURB RAMP APEX	DRAWING NO. C-5.3.5
				DATE 7/2009
APPROVED BY:		7/09		

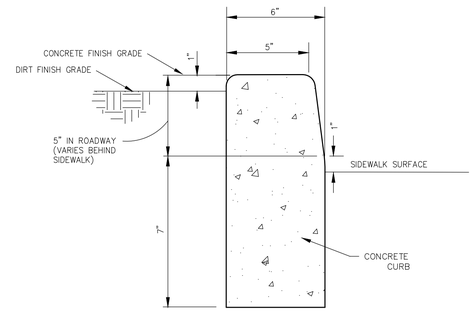

NOTES:

1. NO CONCRETE SHALL BE PLACED UNTIL FORMS AND SUBGRADE ARE INSPECTED BY CARSON CITY PUBLIC WORKS
2. ALL CONCRETE EDGING AND JOINTING SHALL BE CONSTRUCTED IN ACCORDANCE WITH STD. DETAIL 5.1.1 AND CONFORM TO SEC. 312.09 OF THE STANDARD SPECIFICATIONS FOR PUBLIC WORKS CONSTRUCTION (SSPWC).

NO.	REVISION	DATE	STANDARD DETAIL FOR PUBLIC WORKS CONSTRUCTION	SECTION CARSON CITY
			P.C.C. RETAINING CURB	DRAWING NO. C-5.3.10
				DATE 7/2009
APPROVED BY:		7/09		

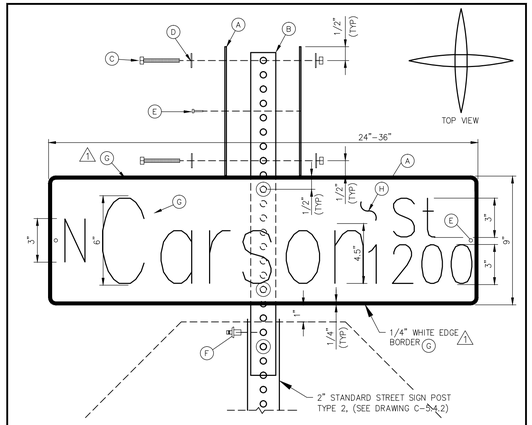

NOTES:

1. STREET NAME SIGN SHALL BE IN CONFORMANCE WITH THE LATEST EDITION OF THE M.U.T.C.D.
2. LETTERING FONT SHALL BE "HIGHWAY EM".
3. SUBMITTAL REQUIRED TO CITY FOR LONGER NAMES OR DROP LETTERS.
4. MATERIALS SHALL CONSIST OF:
   A. (4) FLAT PLATE ALUMINUM NO. 6061-T6, .080 GAUGE.
   B. (1) 2-FOOT LONG 1 3/4-INCH "TELESPAR" OR EQUIVALENT
   C. (4) 2 1/2-INCH LONG, 5/16-INCH SAE GRADE 5 BOLT & NUT
   D. (8) FLAT WASHERS
   E. (4) 1/8-INCH DIAMETER, STEEL POP RIVET (MEDIUM LENGTH) WITH 1/8-INCH WASHER (ALUMINUM OR STEEL)
   F. (1) 3/8-INCH DRIVE RIVET STEEL "SOUTHCO"
   G. WHITE SHEETING – RETROREFLECTIVE ASTM IX DIAMOND GRADE VIP "3M" OR EQUIVALENT
   H. GREEN SHEETING – TRANSPARENCY ELETRO CUT FILM 1177C "3M" OR EQUILVALENT

NO.	REVISION	DATE	STANDARD DETAIL FOR PUBLIC WORKS CONSTRUCTION	SECTION CARSON CITY
1	BORDER	6/12	**STREET NAME SIGN AND MOUNTING**	DRAWING NO. C-5.4.1
				DATE 6/2012
APPROVED BY:		6/12		

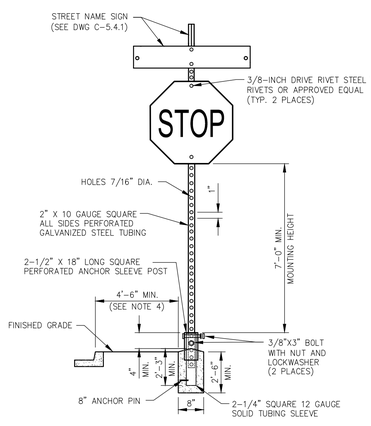

NOTES:

1. SIGN MATERIALS, CONSTRUCTION AND PLACEMENT SHALL BE IN CONFORMANCE WITH THE LATEST EDITION OF THE MANUAL ON UNIFORM TRAFFIC CONTROL DEVICES.
2. STREET NAME SIGN SHALL BE AS SPECIFIED IN STANDARD DETAIL DRAWING NO. C-5.4.1
3. ON STREETS WHERE CURBING DOES NOT EXIST, SET SIGN 6 FEET MINIMUM FROM PAVEMENT EDGE.
4. CONCRETE BASE SHALL BE LOCATED AT BACK OF SIDEWALK, UNLESS OTHERWISE DIRECTED BY THE CITY ENGINEER.
5. ALL REGULATORY SIGNS SHALL USE ASTM TYPE 3 OR 4 INTENSITY SHEETING.

NO.	REVISION	DATE	STANDARD DETAIL FOR PUBLIC WORKS CONSTRUCTION	SECTION CARSON CITY
			TRAFFIC SIGN INSTALLATION	DRAWING NO. C-5.4.2
				DATE 7/2009
APPROVED BY:		7/09		

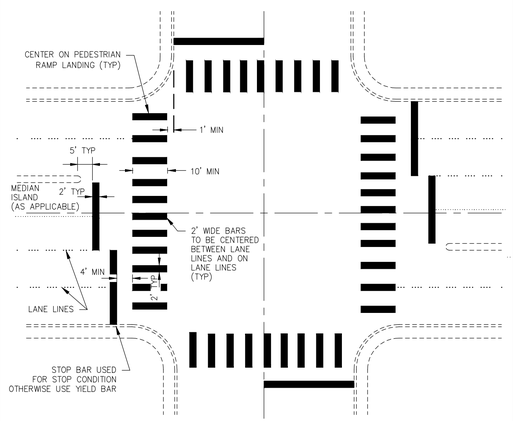

TYPICAL CROSSWALK STRIPING DETAIL

NOTES:

1. ALL STRIPING SHALL CONFORM TO THE MANUAL ON UNIFORM TRAFFIC CONTROL DEVICES (MUTCD) FOR STREETS AND HIGHWAYS, CURRENT EDITION.
2. INLAY TAPE STRIPING AND/OR PAVEMENT LEGENDS SHALL BE INSTALLED PER MANUFACTURERS RECOMMENDATIONS.
3. CROSSWALK MARKINGS SHALL BE INSTALLED AT ALL TRAFFIC SIGNAL LOCATIONS AND AT OTHER LOCATIONS AS DIRECTED BY THE CARSON CITY ENGINEER OR PUBLIC WORKS DIRECTOR.

NO.	REVISION	DATE	STANDARD DETAIL FOR PUBLIC WORKS CONSTRUCTION	SECTION CARSON CITY
			CROSSWALK LEGEND	DRAWING NO. C-5.4.3
				DATE 7/2009
APPROVED BY:		7/09		

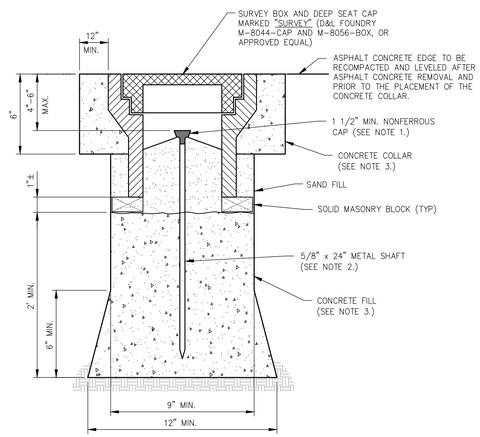

NOTES:

1. 1 1/2 INCH MIN. NONFERROUS CAP WITH PROFESSIONAL LAND SURVEYOR NO. PERMANENTLY ATTACHED PRIOR TO PLACEMENT.
2. 5/8 INCH METALLIC SHAFT (SMOOTH SHAFTS TO BE DEFORMED).
3. PORTLAND CEMENT CONCRETE (P.C.C.) SHALL HAVE THE FOLLOWING CHARACTERISTICS: 4000 PSI MIN. COMPRESSIVE STRENGTH AT 28 DAYS, MIN. 6 SACKS OF CEMENT PER CUBIC YARD WITH A MAX. WATER/CEMENT RATIO OF 0.45, AIR ENTRAINMENT 6% ±1.5%, SLUMP AT 1 TO 4 INCHES. ALL MATERIALS SHALL CONFORM TO SSPWC SECTION 202.
4. PRE-PUNCHED CAPS ARE NOT PERMITTED.

NO.	REVISION	DATE	STANDARD DETAIL FOR PUBLIC WORKS CONSTRUCTION	SECTION CARSON CITY
			CLASS "A" SURVEY MONUMENT	DRAWING NO. C-5.5.3
				DATE 7/2009
APPROVED BY:		7/09		

DESIGNED BY: BD/DA
DRAWN BY: BD
CHECKED BY: DLR
DWG NO.: LITTLECURB-BS1
SCALE (HORIZ): N/A
SCALE (VERT): N/A
PLOT DATE: 2015MAY011

CARSON CITY PUBLIC WORKS DEPARTMENT
3505 BUTTI WAY CARSON CITY, NEVADA 89701
PH: 775-887-2355 FAX: 775-887-2112

PROFESSIONAL ENGINEER - STATE OF NEVADA
DANIEL L. ROTTER
Exp 12-31-15
CIVIL
No. 22071

REV.	DATE	DESCRIPTION	BY	APP'D

LITTLE LANE
2015 ROADWAY RECONSTRUCTION
PROJECT No. ST0006
LITTLE LANE
PLAN & PROFILE
STA 28+00 to STA 31+00

SHEET C9 OF 9

BID SET - NOT FOR CONSTRUCTION

I:\CAPITAL PROJECTS\Projects\ST0006-LittleLaSimpson\02.Design\DWG\littlecurb-bs1.dwg, 5/11/2015 10:52:58 AM, bdayal

I:\CAPITAL PROJECTS\Projects\ST0006-LittleLaSimpson\02.Design\DWG\littlecurb-bs1.dwg