CARSON CITY
SPECIAL EVENT PERMIT PACKET

CARSON CITY WELCOMES YOUR SPECIAL EVENT!!!

Special Event Application Contents:

Section 1: When is a Special Event Permit Required? ..... Page 1
Section 2: Organization and Contact Information ..... Page 2
Section 3: General Special Event Information ..... Page 2
Section 4: Event Application Submittal Deadlines ..... Page 3
Section 5: Event Street Closures ..... Page 3
Section 6: Vendors ..... Page 4
Section 7: Event Food and Beverages (Separate Permit May Be Required) ..... Page 4
Section 8: Event Liquor ..... Page 5
Section 9: Fire (Separate Permit May Be Required) ..... Page 6
Section 10: General Liability Insurance and Indemnification ..... Page 6
Section 11: Acknowledgments and Signatures ..... Page 8

Special Event Permit Fees (payment is due at the time of application submittal):

Special Event Permit	$53.25 per day
Special Event Permit (Non-Profit)	$21.30 per day
Vendor Fees	$ 2.15 per vendor, per day
Temporary Liquor License (5 days maximum)*	$20.00 per day

*Fee is waived if liquor vendor has an active Carson City Catering Liquor License

Submit your COMPLETED application:

In Person or via Regular Mail to:

Carson City Business License Division
108 E. Proctor Street
Carson City, NV 89701

Via Email to:

buslic@carson.org

For applications submitted via email, the Business License staff will contact you for application payment.

If you have any questions about this Special Event Application, please feel free to contact us at (775) 887-2105 or buslic@carson.org.

We look forward to working with you!

	CARSON CITY SPECIAL EVENT PERMIT APPLICATION **Thank you for choosing Carson City as the location for your Special Event!**	Special Event Permit No. Date Permit Submitted:

Below, you'll find important information about the special event permitting process.
In addition, you will be prompted by event-specific questions to guide you through completing the application and guide you through any additional requirements that might apply to your event.

PLEASE COMPLETE ALL SECTIONS OF THIS APPLICATION

SECTION 1: WHEN IS A SPECIAL EVENT PERMIT REQUIRED?

If you answer "yes" to any of the questions below, a Special Event Permit is required.

	Yes	No	
1.	☐	☐	Is your event open to the public? *(Free or able to purchase tickets at the door)*
2.	☐	☐	Is your event located on City property?[1] *(Examples: public streets, sidewalks, McFadden Plaza, city courthouse, etc.)*
3.	☐	☐	Will your event require the closure of any public streets? *(If yes, please also see Section 5 for information on street closures)*
4.	☐	☐	Does your event include live entertainment? *(Examples: live bands, theatrical shows, etc.)*
5.	☐	☐	Will you be offering merchandise for sale? *(If yes, please also see Section 6 for information on vendors)*
6.	☐	☐	If your event is open to the public, will you be serving or selling food? *(If yes, please also see Section 7 for information on food permit requirements)*
7.	☐	☐	If your event is open to the public, will you be serving or selling alcohol? *(If yes, please also see Section 8 for information on temporary liquor licenses)*
8.	☐	☐	Is your event promoted as a festival, trade show, craft show, car show, motorcycle rally, concert or parade?
9.	☐	☐	Will your event require public safety services to support it? *(Examples: Police, Fire, Emergency Medical Services)*

[1] If your event will be located at a facility owned and operated by the Carson City Parks and Recreation Department, this application is not required. For a list of facilities owned by the Carson City Parks and Recreation Department and instructions on how to reserve space, please click the link below.

Reservable Parks Facilities in Carson City

Special Events are regulated by the following sections of the Carson City Municipal Code (CCMC):

CCMC Section 4.04.077 - Special Event Permits
CCMC Section 4.13.240 - Special Event Liquor Permits

Please click the links above to access the applicable sections of the Carson City Municipal Code on the web. At the end of this application, you will be required to sign a statement indicating that you have read and accept the requirements outlined in the code sections above.

SECTION 2: ORGANIZATION AND CONTACT INFORMATION

Business or Organization Name	Type of Business Entity ☐ Commercial ☐ Non-Profit		
Event Organizer Contact Name	Phone		
Email Address	Alternate Phone		
Business Address	City	State	ZIP
Mailing Address	City	State	ZIP

SECTION 3: GENERAL SPECIAL EVENT INFORMATION

Please tell us about the details of your Special Event.

Event Name

Overall Event Start Date and Time	***Overall*** Event Finish Date and Time	***Overall*** Estimated Number of Attendees
Event Setup Start Date and Time	Event Tear Down Finish Date and Time	

For multiple day events, provide the start and finish times for each day:			For multiple day events, provide estimated number of attendees per day:	
Date (Day 1):	Start Time	Finish Time	Day 1:	Estimated Attendees
Date (Day 2):	Start Time	Finish Time	Day 2:	Estimated Attendees
Date (Day 3):	Start Time	Finish Time	Day 3:	Estimated Attendees
Date (Day 4):	Start Time	Finish Time	Day 4:	Estimated Attendees
Date (Day 5):	Start Time	Finish Time	Day 5:	Estimated Attendees

Event Location(s)

Event Description (please attach additional pages if necessary)

Additional General Event Information Required:

1. ☐ Event Site Plan. Please attach a site plan showing the layout of your proposed event including all equipment. (This is **REQUIRED**. Please see Page 9 for an example.)
2. ☐ Daily Event Schedule. Please attach a daily event schedule including start and end times of all associated event activities, including set-up and tear down. (This is **REQUIRED**. Please see Page 10 for an example.)
3. ☐ Private Property Authorization Letter. If your event is being held on private property, please include a letter from the property owner(s) authorizing your event.
4. ☐ Vendor List, if applicable. Please provide a list of vendors selling/serving merchandise, food or liquor at your event. (Please see Section 6 for addition information.)
5. ☐ Liquor Liability Insurance, if applicable. (Please see Section 8 for more information.)
6. ☐ General Liability Insurance, if applicable. (Please see Section 10 for more information.)
7. ☐ Special Event Meeting. A pre-event meeting with City staff may be required depending on the scope of your event. Upon review of your application, City staff will determine the need for a pre-event meeting and will contact you. If you would like to request a pre-event meeting regardless of staff review, please check this box.

SECTION 4: EVENT APPLICATION SUBMITTAL DEADLINES[2]

1. ☐ Events without street closures are required to be submitted at least **30 days prior to the event**.
2. ☐ Events including street closures are required to be submitted at least **60 days prior to the event**.

[2] If submitted after the deadlines above, we will do our very best to accommodate your needs but cannot guarantee the same level of customer service as those applications submitted in a timely manner.

SECTION 5: EVENT STREET CLOSURES[3]

If your event requires street closures, please describe the closures needed here. (Example: Curry Street from Proctor to Spear, Proctor Street from Carson to Curry including entire intersection at Curry and Proctor.)

Streets Proposed for Closure

[3] Please note that most events with street closures will require a pre-event meeting with City staff. Based on the 60-day application deadline, staff will attempt to schedule this pre-event meeting approximately 45 days prior to your event for sufficient coordination time.

Traffic Control Plans for Street Closures

All streets closures require a traffic control plan that will be prepared by City staff as a part of your event. We have several standard traffic control plans available for streets where most events take place. These plans are available for review if you need assistance determining which streets need closure for your event. You may request one of the plans be used as-is, or that one be modified or prepared specifically for your event. Upon determining the scope of your event, City staff will determine the most appropriate traffic control plan based on your needs.

The following steps will occur as a part of your street closure and traffic control plan process:

1. A pre-event meeting will (in most cases) be held to coordinate appropriate street closures needed.
2. A traffic control plan will be prepared by City staff. This may include using an existing plan, modifying an existing plan or creating a new plan.
3. City staff will review the traffic control plan with you and make any needed changes.
4. The final traffic control plan will be sent to you and all applicable city departments.
5. Traffic control equipment will be placed by City staff prior to the event start. This will occur as close to your event start as possible to minimize impact to the traveling public, but will also take into account set-up needs for your event.
6. Traffic control equipment will be removed by City staff after the event ends. This will occur as soon as possible after your event ends and tear-down is completed to minimize impact to the traveling public.

Street Closure Signature Sheet

Property owners and/or tenants that will be impacted by the proposed street, sidewalk or parking space closures must be contacted and informed. A Street Closure Signature Sheet must be provided showing the names, addresses and signatures of all affected parties. Please see Page 11 for the blank sheet.

As your exact street closures may be modified based on input from staff, please wait to obtain signatures until after the street closures have been confirmed by City staff. This is intended to ensure that you don't need to obtain additional signatures on a previously completed sheet as a result of street closure modifications. **The Street Closure Signature Sheet is due no later than 15 days prior to your event.**

SECTION 6: VENDORS

Yes No

1. ☐ ☐ Does your event include vendors offering merchandise, food or alcohol for sale?
   If "yes", please complete the Vendor List located on Page 12 identifying each of your vendors and what product they will be selling.

2. Please note that vendors serving food are subject to the requirements outlined in Section 7 (Event Food) and vendors serving alcohol are subject to the requirements outlined in Section 8 (Event Liquor) below.

SECTION 7: EVENT FOOD AND BEVERAGES (SERVING OR SELLING)[4]

Yes No

1. ☐ ☐ Will you be serving food or drink at your event?
2. ☐ ☐ Is your event open to the public?

If "yes" to both questions above, a Temporary Food Permit issued through Carson City Health and Human Services **MAY** be required depending upon the type of food/drink served. The information below is provided to help you determine if a Temporary Food Permit is required.

Exempt from Temporary Food Permit:

☐ Coffee, tea or both, with powdered non-dairy creamer or ultra-pasturized dairy creamer packaged in individual servings. This does not include beverages such as lattes and espresso that are mixed with a dairy product by the vendor during preparation.

☐ Commercially prepared acidic beverages including, without limitation, orange juice, lemonade and other similar beverages that are served from the original, properly labeled container without the addition of ice or other regulated food products.

☐ Draft beer and other alcoholic beverages that are served without the addition of ice or potentially hazardous food (time/temperature control for safety food). Please note that a Temporary Liquor License is required to serve alcoholic beverages regardless of how the alcohol is served.

Exempt from Temporary Food Permit, Continued:

- ☐ Hermetically sealed (air tight) and unopened containers of nonpotentially hazardous beverages which do not require refrigeration.
- ☐ Hot chocolate prepared without the use of potentially hazardous food (time/temperature control for safety food) or reconstituted dairy products.
- ☐ Non-potentially hazardous prepackaged baked goods, with proper labeling, from an approved source and requiring no on-site preparation.
- ☐ Non-potentially hazardous and unopened prepackaged food from an approved source with proper labeling including, without limitation, honey, jerked meats, potato chips, popcorn and other similar foods. Sampling of these products is not allowed.
- ☐ Produce sold from a produce stand at which no food preparation, breaching (cutting, opening or breaking the produce skin) of produce or product sampling is performed.
- ☐ Food supplements that are offered for sample or sale without the addition of regulated food items. Such food supplements include, but are not limited to, vitamins, minerals, protein powder mixes, energy drinks and herbal mixtures, provided that they are from an approved source.

If the food and/or beverages you would like to serve or sell do not fall within the exempt food and beverage items described above, a Temporary Health Permit is required. Please see Pages 13-20 for the Temporary Health Permit application and instructions as well as a self-inspection checklist for temporary food facilities. Separate submittal of this permit application to the Health and Human Services Division, including the payment of separate fees, will apply.

[4] Regardless of whether a Temporary Food Permit is required, food preparation and handling requirements will still apply. These requirements and other helpful tips are included in this packet on Pages 15-17.

SECTION 8: EVENT LIQUOR (SERVING OR SELLING)

Yes No

1. ☐ ☐ Will you be serving or selling alcohol at your event?

   If "yes", who will be responsible for the selling or serving of alcohol?

   - ☐ Event Organizer Only (as sole alcohol vendor)
   - ☐ Vendors Only (as separate individual vendors each selling or serving alcohol)
   - ☐ Both

2. **Liquor Liability Insurance Required When Alcohol is Served or Offered for Sale**
   a. If liquor will be sold, served or dispensed on any property owned by Carson City (including streets and sidewalks), the event organizer or vendor serving the liquor must provide Liquor Liability Insurance coverage naming the "City of Carson City, its officers, employees and agents" as an Additional Insured for a minimum of $1,000,000 per occurrence. A sample insurance certificate has been provided on Page 21 for your reference.
   b. If the event organizer is acting as the sole alcohol vendor, then he/she must provide a certificate of insurance for the liquor liability coverage identified above for the entire event.
      ☐ Insurance Certificate Attached
   c. If several vendors are serving alcohol, each vendor must provide a separate certificate of insurance for the required liquor liability coverage identified above for their individual operation.
      ☐ Insurance Certificates Attached

3. **Purchase of Wholesale Liquor Required**

   Please note that liquor being served at Special Events must be purchased from a wholesale distributor licensed in Nevada. A list of wholesalers with contact information is attached on Page 22 for your use.

SECTION 9: FIRE[5]

	Yes	No	
1.	☐	☐	Will you have a tent larger than 400 square feet with sides?
2.	☐	☐	Will you have a tent larger than 700 square feet without sides?
3.	☐	☐	Will you have any open flames? This includes cooking, candles, bonfires, or any other use of open flames.
4.	☐	☐	Will you have fireworks or any type of pyrotechnics?

If you have answered "yes" to any of the questions above, a separate, no cost permit from the Carson City Fire Department **MAY** be required. Please call (775) 887-2210 for more information.

Please note the following general requirements applicable to events with fire components and permits through the Fire Department:

1. For open flames, please be prepared to provide the following information to the Fire Department:
   a. If you are cooking:
      Detail on cooking appliances and fuel you will be using (i.e. LPG, wood, electric, etc.)
      Detail on cooking equipment location regardless of whether it is inside or outside.
      Detail on fire extinguishers on site (i.e. type, size, location, etc.)
   b. If you are using candles, you will be asked to provide the following information
      Provide detail on candle type, size and location
      Lit candles can't be passed hand to hand
   c. If you are having a bonfire:
      Provide detail on the bonfire location and expected number of attendees. A site plan will be required. Standby fees may apply for this activity.
   d. If you are using a portable heater:
      Provide detail on the type of heater and whether it is electric, LPG or kerosene.

2. Fireworks and pyrotechnics can only be done by a Nevada licensed pyrotechnician. Please refer to Section 18 of the Fire Prevention Planning Guide for Special Events on Page 29 for a checklist of what must be provided to the Fire Department. Standby fees may apply for these activities.

[5] Fire Department requirements apply to your event regardless of whether a separate Fire Department permit is required. Please refer to the Fire Prevention Planning Guide for Special Events on Pages 23-29 for additional information.

SECTION 10: GENERAL LIABILITY INSURANCE AND INDEMNIFICATION

1. **General Liability Insurance Required.**
   If your event will be held on any portion of property owned by Carson City (sidewalks, streets, etc.), you are required to provide general liability insurance coverage for the specific dates of your event. This coverage is required to name the "City of Carson City, its officers, employees and agents" as Additional Insured for a minimum of $1,000,000 per occurrence. The policy must be obtained from an insurance carrier licensed to do business in the State of Nevada. A sample insurance certificate has been provided on Page 30 for your reference.
   ☐ Insurance Certificate Attached

2. **Hold Harmless and Indemnification.**
   A Hold Harmless and Indemnification Agreement is required as a part of this Special Event Permit. Please complete the agreement on the following page as a part of your application process.
   ☐ Hold Harmless Agreement Completed and Signed by Authorized Party

CARSON CITY SPECIAL EVENTS
PERMIT HOLD HARMLESS & INDEMNIFICATION AGREEMENT

I, the undersigned, submit this hold harmless agreement as part of my request to be issued a special event permit for the dates of _____ to _____ and from the hours of _____ to _____ in the name of the following event:_____.

The provisions of this agreement apply to me, my entity, group or organization and our invitees and/or guests ("permittee"). I agree to abide by all applicable rules and regulations relating to this permit. Failure to do so may result in the revocation of this permit.

I agree to defend, protect, indemnify and hold Carson City, it's officers, employees and agents free and harmless from and against any and all claims, damages, expenses, loss or liability of any kind or nature whatsoever arising out of or resulting from, the alleged acts or omission of permittee, it's officers, agents or employees in connection with the permitted event or activity; and I agree, at my own cost, risk and expense, to defend any and all claims or legal actions that may be commenced or filed against the City, it's officers, agents or employees, and that I will pay any settlement entered into and will satisfy any judgement that may be rendered against the City, it's officers, agents or employees as a result of the alleged acts or omissions of permitee or permittee's officers, agents or employees in connection with the uses, events or activities under the permit.

I agree to give Carson City prompt and timely notice of any claims or suits instituted which may directly or indirectly affect Carson City or is officers, agents or employees.

I agree to reimburse Carson City for any expenses incurred in responding to or defending any claims or suits, including the reasonable value of any services rendered or time spent by City officers, agents or employees in in responding to or defending such claims or suits.

I also agree to obtain and maintain a policy of General Liability Insurance (Occurrence Form) in the amount of $1,000,000 from an insurance carrier with an AM Best Rating, admitted to do business in the State of Nevada and to maintain this policy in full force during the term of this permit. I agree to name Carson City, its officers, agents and employees as additionally insured on this policy and accompanying endorsement page. This insurance policy must provide liability coverage for the activities of vendors and entertainers participating in the special event. If coverage is excluded for any vendor or entertainer, proof of insurance for the vendor or entertainer must be provided through additional insurance policies, also naming Carson City, its officers, agents and employees as the additional insured. Proof of insurance policies covering the permittee and/or vendors and entertainers must be submitted to Carson City at least seven (7) business days in advance of the event. Proof of coverage must be provided in the form of a Certificate of Insurance with the endorsement page. Carson City's acceptance of an insurance certificate does not relieve me of liability nor will the amount of insurance limit my responsibility.

I certify that I have the authority to enter into this agreement on behalf of the entity or organization described below and that I am executing this agreement on its behalf.

Authorized Party _____ Organization _____

Signature _____ Date _____

SECTION 11: ACKNOWLEDGMENTS AND SIGNATURES

I have read and understand/accept the requirements related to this event as stated in this permit application and in Carson City Municipal Code, Sections 4.04.077 and 4.13.240. I further understand that issuance of my special event permit may be contingent upon my acceptance of additional reasonable conditions determined by City staff upon review of my application.

Signature: _____ Date: _____

Print Name: _____

☐ **Please check here if you are willing to attend a post-event meeting with City staff to provide feedback on how we can make your event experience better. (If box is checked, we will contact you to set up a meeting at your convenience.)**

OFFICE USE ONLY

Permit Fees	FEE	Permit Checklist	
Event Permit Fee		Vendor List	☐
Event Permit Fee (Non-Profit)		Authorization Letter from Property Owner	☐
Vendor Fees		Event Layout/Site Plan	☐
Temporary Liquor License Fee		Daily Event Schedule	☐
TOTAL FEES DUE:		Street Closures	☐
Payment Type:		Pre-Event Meeting Required	☐
Received By:	Date:	Street Closure Signature Sheet (15 days prior)	☐
Staff Notes:		Liquor Liability Insurance (if applicable)	☐
		General Liability Insurance Certificate	☐
		Separate Health Permit Required	☐
		Separate Fire Permit Required	☐

SAMPLE EVENT SITE PLAN

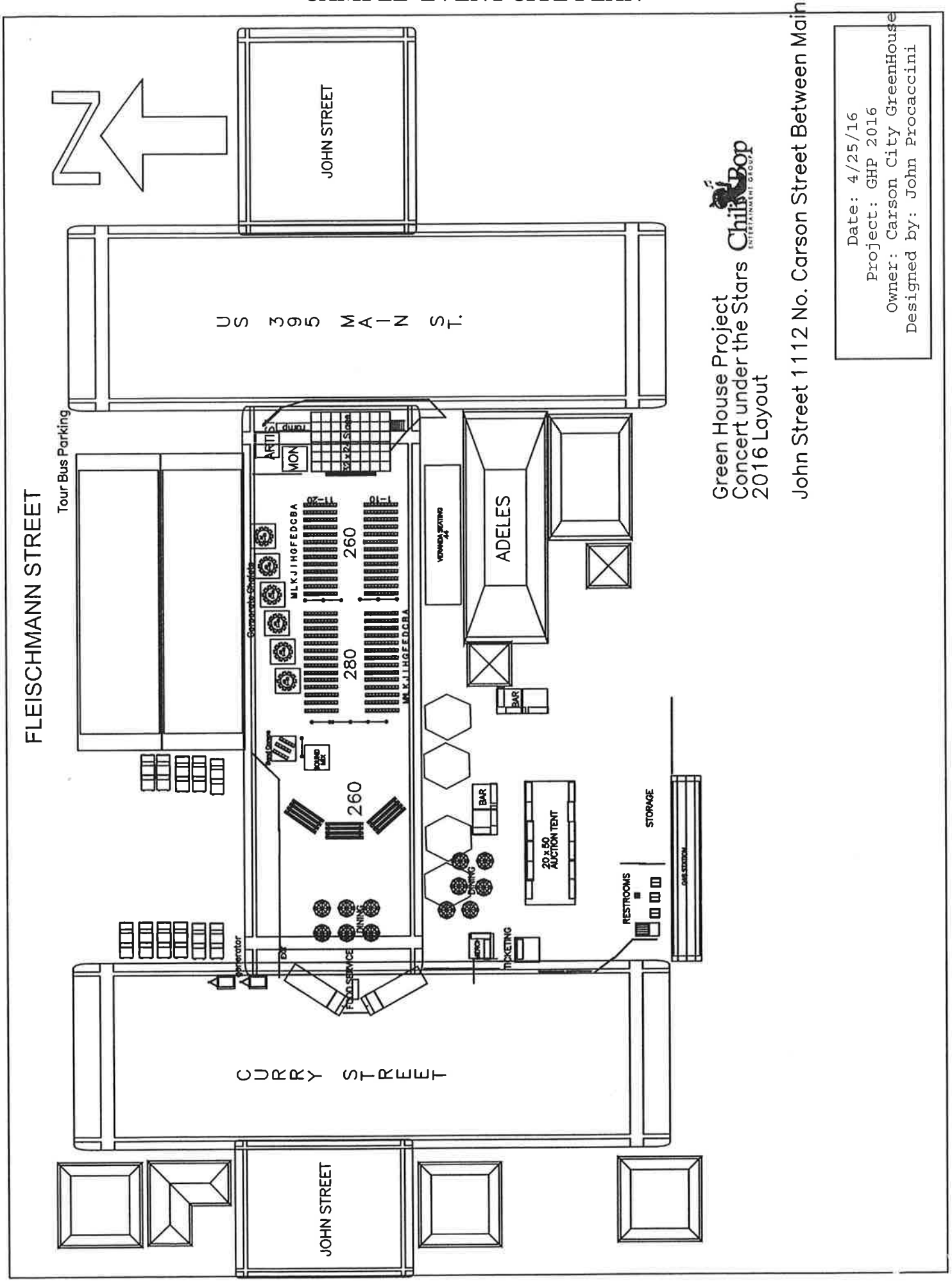

SAMPLE EVENT SCHEDULE

Operational Schedule

Friday June 17
5 a Expo Area Streets are Closed
5:15a Expo area set up begins (tents go up,, vendors begin setting up)
Noon Expo Opens
3:00p Capitol 15 Fun Ride Begins (police escort out)
3:30p Criterium Course Streets are Closed
3:30p Coned safety lane on ingress for returning 15mile riders
6:30p Pro Women Criterium Begins (warm up laps begin at 6p) Police Stationed for Traffic Control)
7:15p Pro Men Criterium Begins
7:30p Community Ride (start time could change to 6p)

Saturday June 18
7:30a Expo Opens
7:30a Capitol 50 starts (Police escort out to dirt road at Kings Canyon)
8:45a Capitol 35 Starts (Police escort out to dirt road at Kings Canyon)
10:30a Coned safety lane on ingress for returning riders
11:30a Riders begin finishing
2:30-4:30p Slow Ride

Sunday June 19th
8:30a Pro Men Start (Police escort out to dirt road at Kings Canyon)
8:40a Pro Women Start (Police escort out to dirt road at Kings Canyon)
9a Kids Ride (Police stationed)
10a Slow Ride Championship
10:30a Coned safety lane on ingress for returning riders
10:50a Pro Men (Police escort in from beginning of pavement on Winnie Ln to finish line) *Estimated finishing time
11:20a Pro Women ((Police escort in from beginning of pavement on Winnie Ln to finish line) *estimated finishing time
3p Bike Lane Cones pulled and expo closes and expo tear down begins
6p Roads reopen

Carson City Special Event
Street Closure Signature Sheet

Event Name			
Event Date(s)			
Proposed Closures (Include Streets, Sidewalks and/or Parking Spaces)			
Closure Start Date:		**Closure Start Time:**	
Closure End Date:		**Closure End Time:**	

Event Organizer Instructions: All property owners and/or tenants impacted by a street, sidewalk or parking space closure(s) as a result of your event **MUST** be contacted and informed of the proposed closure(s). As a part of this contact, you must provide a copy of your City-approved Event Site Plan and Event Schedule to the property owners and/or tenants for their information. If additional sheets are needed, please photocopy this form.

Property Owner/Tenant Instructions: By signing this form, you are acknowledging you have been notified of the event and associated street, sidewalk or parking space closure(s) outlined above and have been given a copy of the Event Site Plan and Event Schedule for this event. Your signature does not indicate your approval of the event, but serves as proof that you are aware of the event and its associated closures.

	Property Owner/Tenant	Property Address Affected	Property Owner/Tenant Signature
1.			
2.			
3.			
4.			
5.			
6.			
7.			
8.			
9.			
10.			
11.			
12.			
13.			
14.			
15.			

Carson City Business License Division

108 E. Proctor St.
Carson City, Nevada 89701
(775) 887-2105

Vendor List

Vendor	Selling/Serving		
	Merchandise	Food	Liquor

Carson City Health & Human Services
Environmental Health Program
Application for a Temporary Food Permit

FOR OFFICE USE ONLY

Date Paid:_____
AMT Paid:_____Late Fee: _____
Check #:_____
Receipt Number: _____
Nonprofit Tax ID#: _____

Please submit a completed application with payment to health department 5 business days prior to event.

1. Event: | Location of Event:
2. Name of Event Coordinator: | Phone:
3. Dates of Participation: Setup Time: Event Start Time: Length of the Event:
4. Business/Organization/Food Service Represented:
5. Applicant's Name: | Phone:
6. Applicant's Address: email:
7. Person(s) in Charge at Food Service Site:
8. Location of Advanced Preparation: Is this location a permitted establishment: ❑ Yes ❑ No

County of event: ❑Carson City ❑Douglas

Please print. If you need more space use additional paper. | **Food Prep Begins:** | **Food Prep Ends:**

FOOD ITEM	*PREP - ON OR OFF SITE	COOKING PROCEDURES	HOLDING HOT OR COLD	SERVING HOT OR COLD

***According to NAC 446.101 subsection 2 No food prepared or stored in a private home may be used, stored, served, offered for sale, sold, given away or offered to the public in a food establishment.** This permit is for a temporary food establishment and falls under the above statement. **Any food found to be prepared at home will be discarded on site and possible revocation of permit.**

9. Describe: Cold/Hot Holding Equipment: Cooking/Reheating Equipment:
10. If Food is Transported to the Food Service Site:
    What is the Length of Time in Transport: How is the Food to be kept Hot or Cold?
11. Stem-Type (0-220 degrees F) food thermometer available? ❑ Yes ❑ No ❑ Not Applicable **REQUIRED**
12. Water Source: | Wastewater Disposal: ❑Sewer ❑Holding Tank

(As a minimum, you need 5 gallons in a container with a free flowing spigot, a covered bucket for wastewater, pump soap container and paper towels)

13. Handwashing Facilities: ❑ Plumbed Sink ❑ Gravity Flow Container **REQUIRED**
14. Utensil Washing Facilities: ❑ Temporary 3 containers ❑ Adequate supply of clean utensils for daily operation (Washed at a permitted establishment)
    ❑Other : **REQUIRED**
15. Garbage disposal: ❑ Covered Trash Cans ❑ Dumpsters
16. Food Booth Construction: ❑ Canopy ❑Mobile Vehicle ❑ Concession Trailer ❑Other: **REQUIRED**
17. To help clarify your location, please include an additional map which can be attached to this document.

I hereby consent to inspection by the HEALTH DEPARTMENT and acknowledge that issuance and retention of this permit is contingent upon satisfactory compliance with local temporary food service requirements.

Applicant's Signature: Date:

Revised: 3/30/15 Supersedes: 03/06/2014

Carson City Health & Human Services
Environmental Health Division
900 E. Long Street
Carson City, NV 89706
Phone: (775) 887-2190
Fax: (775) 887-2248

PUBLIC HEALTH
REGIONAL PARTNERSHIP
Carson City · Douglas County

Douglas County
Environmental Health Department
1323 Waterloo Lane
Gardnerville, NV 89423
Phone: (775) 782-6207
Fax: (775) 887-2248

Food Vending at Temporary Events

NRS 446.870… "It is unlawful for any person to operate a food establishment without a valid permit issued to him by the health authority."

All vendors seeking a temporary health permit must submit an application for the permit to be reviewed by Carson City Health & Human Services officials at least 5 business days before the date of operation. Submittal of application does not guarantee approval to operate. **All fees (listed below) must be paid prior to application review and approval to operate. Late fees will be assessed on all applications received less than 5 working days prior to the event.**

Carson City

Event Duration	Event Fee	Late Fee
1 day	$25.00	$25.00
2-7 days	$50.00	$35.00
8-14 da	$75.00	$40.00
Farmer's Mar	$75.00	$40.00

Non-profit organizations that operate in Carson City, which provide a non-profit tax identification number, are not charged Event Fees*.

Late fees will be assessed on all late applications.

NOTE: HEALTH INSPECTORS CANNOT COLLECT FEES IN THE FIELD

Complete the entire application including the bottom portion. Incomplete applications will cause delays in the review process and may prohibit you from operating a temporary food establishment.

After the application is reviewed and administratively approved, an Environmental Health Specialist will conduct a routine inspection of your temporary food booth during food operations. If the Environmental Health Specialist determines the food booth is in compliance with the temporary food vending requirements, you will be issued a health permit to operate. **Post the permit copy in a conspicuous, observable place for the duration of the temporary food operations. You will not be allowed to operate a temporary food establishment if you do not have a permit for operation and/or your temporary food booth is not in compliance with health regulations.**

Minimum Requirements for Food Preparation and Handling

1. Food booths must have an overhead structure and an acceptable floor surface approved by the health authority.
2. Foods (including ice) must be from an approved source, i.e., restaurant/grocery store/a source approved by the health authority.

   Food prepared in a private residence is strictly prohibited.
3. Potentially hazardous foods served at a temporary food establishment must be prepared and served in the same day and must not be saved for service on the following day.
4. No cooking and cooling of food to be used the next day will be allowed in a temporary food establishment.
5. Minimum cooking temperatures required are as follows:

a) Chicken:	**165 °F**
b) Ground Poultry:	**165 °F**
c) Ground Meat:	**155 °F**
d) Pork:	**155 °F**
e) All other foods:	**145 °F**

6. Hot foods must be held at 135°F or greater. Gas or electric hot holding units are preferred.
7. Heating or cooking equipment must be placed in an area inaccessible to the public.
8. All foods that require reheating must be quickly and thoroughly heated to 165 °F within 30 minutes prior to being held or served.
9. Foods that require cold storage must be held at 41°F or below.
10. A calibrated metal stem thermometer is **required** at each food booth handling any potentially hazardous foods (i.e. raw meats, hot dogs, chili, potatoes, rice, beans, etc.). The thermometer should have a range of at least 0°F to 220°F and accurate to ± 2°F.
11. Raw meats or poultry must be stored and prepared so they will not contaminate other foods.
12. A hand wash station is required at each food booth. A minimum of five gallons of water **dispensed by a spigot (free flowing),** pump soap, paper towels and a catch basin/bucket (for gray water).
13. **Bare hand contact of Ready to Eat foods is prohibited**; this can be accomplished through the use of tongs, dispensing utensils, deli paper, or the proper use of disposable gloves.

14. Cloth sanitizing towels used during the event must be stored in sanitizing bucket with proper mix of an approved sanitizer and water solution. Food service utensils must be washed, rinsed and sanitized in a three-step approved method or an adequate supply of clean utensils, washed at a permitted food establishment must be available for daily operations.
15. All food and paper products must be stored off the ground.
16. Condiments must be dispensed from a pump or served in single-service packets.
17. Booths that offer food samples must serve individual portions so that contact with food products is minimized (i.e. on individual plates or with toothpicks). **Common bowls are strictly prohibited.**
18. Baked goods must be displayed under a cover or in a display case. Baked goods will be served with tongs or other devices that minimize or eliminate bare hand contact.
19. An ice scoop with a handle must be used to serve ice to customers. The scoop must be stored in an upright position so that the handle does not come into contact with ice. Ice or ice products may not be exposed to sources of contamination.
20. Suitable dispensing utensils, adequate in number, must be used when serving food. Utensils must be stored in the food with the handle of the utensil extended out of the food.
21. Solid waste and garbage must be stored in a leak proof container with tight fitting lids.
22. All liquid waste must be contained and disposed of in the sanitary sewer or other means approved by the Health Authority.

Hand Washing and Other Food Safety Quick Tips

Good personal hygiene is a critical protective measure against food borne illness. In addition, customers frequently judge a food service operation by observing the personnel serving them.

WASH YOUR HANDS FOR AT LEAST 20 SECONDS.

This is usually the length of time it takes to sing "Happy Birthday"

- Before handling any foods.
- Before putting on gloves.
- After handling raw foods and before handling foods that do not require cooking.
- After using the restroom, smoking, touching your face, hair or contact with body fluids.

ALL PERSONNEL HANDLING FOODS SHOULD BE VISIBLY HEALTHY AND NOT HAVE:

- Colds and/or Coughs.
- Diarrhea or Stomach Flu.

ALL PERSONNEL SHOULD BE DRESSED APPROPRIATELY FOR SERVING FOOD

- Wear clean clothing and adequate hair restraints.
- No jewelry, watches, rings, bracelets, or finger nail polish.
- No smoking or eating while handling food or in the food prep area.

SANITATION OF YOUR WORK AREA

- Always keep a clean, sanitary work environment.
- Frequently clean counter, equipment and all work surfaces with sanitizing solution.
- To clean food prep areas: keep wiping cloths in a bucket of clean water with bleach (about 1 tablespoon per gallon of water).
- Keep food-serving utensils in a container of 50-100 ppm bleach solution and change solution frequently.

FOOD SAFETY TIPS

- Potentially Hazardous foods are those that support the rapid growth of organisms that cause food borne illness. Such foods include: meats, cut melons, dairy products, gravies, rich, potatoes and beans.
- Pre-processed, pre-cooked foods that are ready-to-serve and individually wrapped or sealed are best for temporary food booths.
- Keep all unsealed foods protected from contamination – especially from flies. Keep lids on all serving dishes or plastic wrap on all containers without lids.

This is only a partial list of the requirements for temporary food establishments and shall not be construed to be exclusive. Contact Carson City Health & Human Services at: (775) 887-2190 for more information.

Booth Set-Up Diagrams

Sample Canopy Set-up Set-up

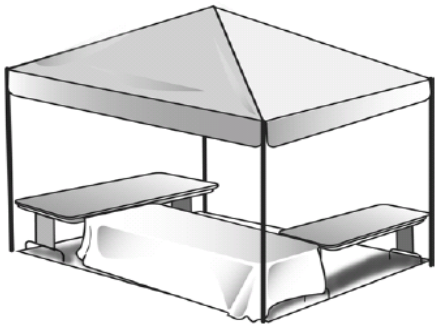

Sample Minimum Hand Wash

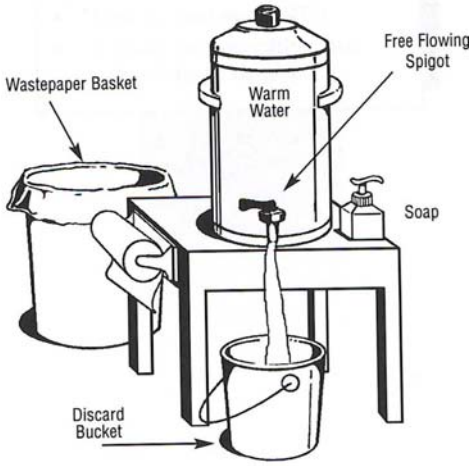

Sample of suggested set up under canopy set-up

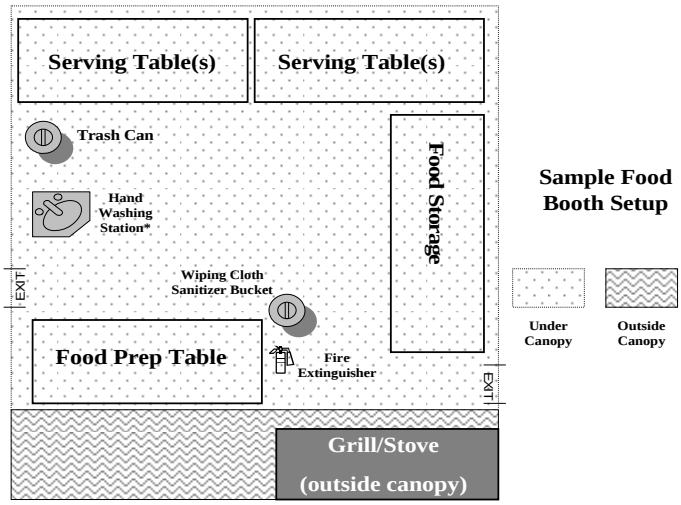

Suggested utensil washing set-up

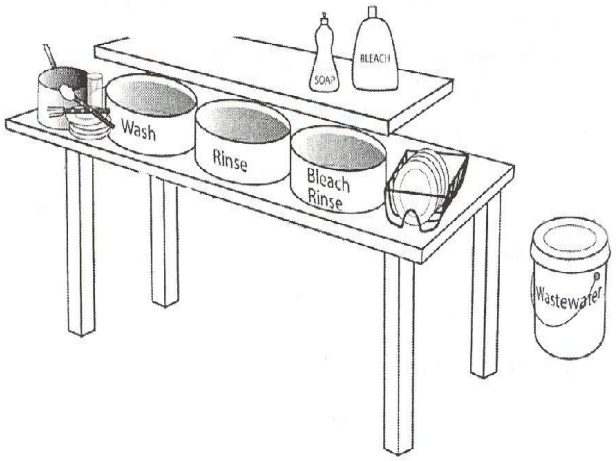

Carson City Health & Human Services
Environmental Health Division
900 E. Long Street
Carson City, NV 89706
Phone: (775) 887-2190
Fax: (775) 887-2248

PUBLIC HEALTH
REGIONAL PARTNERSHIP
Carson City · Douglas County

Douglas County
Environmental Health Department
1323 Waterloo Lane
Gardnerville, NV 89423
Phone: (775) 782-6207
Fax: (775) 887-2248

SELF-INSPECTION CHECKLIST FOR TEMPORARY FOOD FACILITIES

Pre-Opening Requirements

	Initial
An approved supply of potable water is provided.	
All booths have a cleanable floor (grass, dirt and decomposed granite MUST be covered with approved tarps or plywood) and overhead protection.	
REQUIRED—a hand washing station MUST be set up and ready to use inside the booth: o For hand washing: 5 gallons of water from approved water source in a container with a spigot than can be locked in the open position. o Liquid Soap in a pump dispenser. o Paper toweling in a dispenser or off the surface of the storage table. o A trash container with a tight-sealing lid.	
REQUIRED—a utensil wash station that is set up and ready to use inside the booth. o 3 containers large enough to hold the largest piece of equipment or utensil: ▪ 1 container with warm soapy water (Wash) ▪ 1 container with warm clean water (Rinse) ▪ 1 container with 50-100 ppm chlorine bleach sanitizer solution or other approved sanitizer in solution (Sanitize) ▪ Test strips to monitor sanitizer solution must be available.	
REQUIRED—Enough equipment and space provided to hold ALL: o Cold foods at or below 41 degrees F. o Hot foods at or above 135 degrees F.	

**If you intend on selling Jerky and or other processed meat, poultry or port products, ensure that you have read and understand the Health Department document provided entitled: *Requirements for the Sale of Jerky and Dried/Processed Meat/Protein Products.*

Food booth Structure and Operations

Correctly structured and large enough to accommodate all food and equipment (no outside food preparation is allowed).	
Name of the company booth displayed.	
Shatterproof or adequately covered light bulbs over food preparation & storage areas.	
This completed, signed and dated self-inspection checklist must be visibly posted inside the booth during operations.	
All open food stored inside the facility must be off the floor/ground.	
All equipment and utensils must be approved for use in a food facility.	
BBQ and deep-frying cooking areas must be fenced off from public access.	
Live animals are not allowed in the food booth or cooking areas.	
Restroom(s) must be located within 200 feet of the food booth.	
Leak-proof containers must be provided for: Waste water, trash, and grease.	
Employees working in the food booth must know the location of the common waste disposal area.	
An approved sanitizing solution at the proper ppm for wiping cloths must be provided.	

*TO BE POSTED CONSPICUOUSLY INSIDE THE FOOD BOOTH

VERSION 7 (04/14/16)

Carson City Health & Human Services
Environmental Health Division
900 E. Long Street
Carson City, NV 89706
Phone: (775) 887-2190
Fax: (775) 887-2248

PUBLIC HEALTH
REGIONAL PARTNERSHIP
Carson City · Douglas County

Douglas County
Environmental Health Department
1323 Waterloo Lane
Gardnerville, NV 89423
Phone: (775) 782-6207
Fax: (775) 887-2248

Food Preparation and Handling

Food must be from an approved source: o **No foods stored or prepared in a private home unless this is a Cottage Food Operation (invoices/receipts must be available for review).** o **No open food store or displayed at the customer service counters.** o **Condiments must be in single-service, pump-type, or squeeze containers only.**	
Calibrated probe-type metal stem thermometers must be provided.	
Cooking temperatures must be monitored and register at the following temperatures: o **Chicken and Hot Dogs: 165 degrees Fahrenheit (°F)** o **Ground Poultry: 165 degrees Fahrenheit (°F)** o **Ground Meat: 155 degrees Fahrenheit (°F)** o **Pork: 155 degrees Fahrenheit (°F)** o **All other foods: 145 degrees Fahrenheit (°F)**	
Utensils and disposable gloves must be provided to minimize hand/food contact.	

Personnel Practices

Employees must:

Keep hands clean and washed frequently.	
Have no open sores or any disease that is communicable.	
Wear clean clothing and have hair restraints as necessary.	
Not smoke in the food booth, in BBQ area, or in deep-fat fryer areas.	
Only employees of the booth are allowed in the preparation area of the booth.	

Additional Requirements

Temporary Health Permit MUST be prominently displayed in public view.	
The Fire Department has been contacted regarding any additional requirements. o **Proper type of fire extinguisher for food operation.** o **Gas cylinders properly stored and restrained.**	

SIGNATURE OF BOOTH OPERATOR	DATE OF SIGNATURE

***TO BE POSTED CONSPICUOUSLY INSIDE THE FOOD BOOTH**

VERSION 7 (04/14/16)

SAMPLE LIQUOR LIABILITY INSURANCE CERTIFICATE

ACORD®

CERTIFICATE OF LIABILITY INSURANCE

DATE (MM/DD/YYYY): Current Date

THIS CERTIFICATE IS ISSUED AS A MATTER OF INFORMATION ONLY AND CONFERS NO RIGHTS UPON THE CERTIFICATE HOLDER. THIS CERTIFICATE DOES NOT AFFIRMATIVELY OR NEGATIVELY AMEND, EXTEND OR ALTER THE COVERAGE AFFORDED BY THE POLICIES BELOW. THIS CERTIFICATE OF INSURANCE DOES NOT CONSTITUTE A CONTRACT BETWEEN THE ISSUING INSURER(S), AUTHORIZED REPRESENTATIVE OR PRODUCER, AND THE CERTIFICATE HOLDER.

IMPORTANT: If the certificate holder is an ADDITIONAL INSURED, the policy(ies) must be endorsed. If SUBROGATION IS WAIVED, subject to the terms and conditions of the policy, certain policies may require an endorsement. A statement on this certificate does not confer rights to the certificate holder in lieu of such endorsement(s).

PRODUCER	CONTACT NAME: Agent, Broker or Carrier Contact Information	
Name and Address of Producing Broker or Agent	PHONE (A/C, No, Ext):	FAX (A/C, No):
	E-MAIL ADDRESS:	
	INSURER(S) AFFORDING COVERAGE	NAIC #
	INSURER A : Full Name of Insurance Company	#####
INSURED	INSURER B :	
Full Name and Address of Company (must match company name on contract or other written agreement, including DBA when applicable)	INSURER C :	
	INSURER D :	
	INSURER E :	
	INSURER F :	

COVERAGES **CERTIFICATE NUMBER:** **REVISION NUMBER:**

THIS IS TO CERTIFY THAT THE POLICIES OF INSURANCE LISTED BELOW HAVE BEEN ISSUED TO THE INSURED NAMED ABOVE FOR THE POLICY PERIOD INDICATED. NOTWITHSTANDING ANY REQUIREMENT, TERM OR CONDITION OF ANY CONTRACT OR OTHER DOCUMENT WITH RESPECT TO WHICH THIS CERTIFICATE MAY BE ISSUED OR MAY PERTAIN, THE INSURANCE AFFORDED BY THE POLICIES DESCRIBED HEREIN IS SUBJECT TO ALL THE TERMS, EXCLUSIONS AND CONDITIONS OF SUCH POLICIES. LIMITS SHOWN MAY HAVE BEEN REDUCED BY PAID CLAIMS.

INSR LTR	TYPE OF INSURANCE	ADDL INSD	SUBR WVD	POLICY NUMBER	POLICY EFF (MM/DD/YYYY)	POLICY EXP (MM/DD/YYYY)	LIMITS	
A	✓ COMMERCIAL GENERAL LIABILITY ☐ CLAIMS-MADE ✓ OCCUR GEN'L AGGREGATE LIMIT APPLIES PER: ✓ POLICY ☐ PRO-JECT ☐ LOC OTHER:	Y		Policy Number Include Liquor Liability in this section if coverage is provided under the General Liability coverage form or applicable endorsements.	Effective Date of Policy	Expiration Date of Policy	EACH OCCURRENCE DAMAGE TO RENTED PREMISES (Ea occurrence) MED EXP (Any one person) PERSONAL & ADV INJURY GENERAL AGGREGATE PRODUCTS - COMP/OP AGG Liquor Liability	$ 1,000,000 $ 100,000 $ $ $ $ $ 1,000,000
	AUTOMOBILE LIABILITY ☐ ANY AUTO ☐ ALL OWNED AUTOS ☐ SCHEDULED AUTOS ☐ HIRED AUTOS ☐ NON-OWNED AUTOS			INFORMATION ONLY			COMBINED SINGLE LIMIT (Ea accident) BODILY INJURY (Per person) BODILY INJURY (Per accident) PROPERTY DAMAGE (Per accident)	$ $ $ $ $
	☐ UMBRELLA LIAB ☐ OCCUR ☐ EXCESS LIAB ☐ CLAIMS-MADE ☐ DED ☐ RETENTION $						EACH OCCURRENCE AGGREGATE	$ $ $
	WORKERS COMPENSATION AND EMPLOYERS' LIABILITY ANY PROPRIETOR/PARTNER/EXECUTIVE OFFICER/MEMBER EXCLUDED? Y / N ☐ (Mandatory in NH) If yes, describe under DESCRIPTION OF OPERATIONS below	N / A					☐ PER STATUTE ☐ OTH-ER E.L. EACH ACCIDENT E.L. DISEASE - EA EMPLOYEE E.L. DISEASE - POLICY LIMIT	 $ $ $
	Liquor Liability			Policy Number	Effective Date	Expiration Date	Each Common Cause: $1,000,000 Aggregate Limit: $2,000,000	

Include evidence of Liquor Liability coverage here if purchased under separate policy than General Liability.

DESCRIPTION OF OPERATIONS / LOCATIONS / VEHICLES (ACORD 101, Additional Remarks Schedule, may be attached if more space is required)

SAMPLE WORDING ONLY

Certificate Holder, including its officers, employees and agents, are included as Additional Insureds under General Liability as their interests may appear with respect to the operations of the Named Insured at (Event Name) held at (Event Location) scheduled for (Event Dates to include set-up and tear-down). Policy form (or endorsement ###### is attached confirming additional insured status.

CERTIFICATE HOLDER

Carson City Consolidated Municipality
City of Carson City, NV
201 N. Carson St.
Carson City, NV 89701

CANCELLATION

SHOULD ANY OF THE ABOVE DESCRIBED POLICIES BE CANCELLED BEFORE THE EXPIRATION DATE THEREOF, NOTICE WILL BE DELIVERED IN ACCORDANCE WITH THE POLICY PROVISIONS.

AUTHORIZED REPRESENTATIVE

Signature of Authorized Representative

© 1988-2014 ACORD CORPORATION. All rights reserved.

LIQUOR WHOLESALE DISTRIBUTORS

Wholesale Distributors

20-Jan-11

Dba Name	Loc Street 1 Txt	Loc City Txt	Loc State Cd	Loc Zip Cd	Phone Number
CAPITAL BEVERAGES INCORPORATED	2333 FAIRVIEW DR	CARSON CITY	NV	897015858	775-882-2122
HIGH SIERRA BREWING	302 S CARSON ST	CARSON CITY	NV		775-882-7751
CHURCHILL VINEYARDS	1045 DODGE LN	FALLON	NV	89406	775-423-4000
VALLEY DISTRIBUTORS	880 E FRONT ST	FALLON	NV	894068151	775-423-3432
TAHOE RIDGE WINERY & MARKETPLACE	2285 MAIN ST	GENOA	NV	89411	775-783-1566
BIG WOODY WINE CO LLC	876 TANAGER ST	INCLINE VILLAGE	NV	894519417	775 831-6126
BARONE IMPORTS & WHOLESALE LLC	8630 TECHNOLOGY WAY STE A	RENO	NV	89521	775-284-7778
BJ'S RESTAURANT & BREWERY	13999 S VIRGINIA ST #96	RENO	NV	89511	714-500-2435
BUCKBEAN BREWING COMPANY LLC	1155 S ROCK BLVD STE 490	RENO	NV	895027174	775-722-3949
CEPAGE LLC	4690 LONGLEY LN STE 112	RENO	NV	895027939	646-509-0900
EL DORADO HOTEL CASINO	345 N VIRGINIA ST	RENO	NV	89501	775-786-5700
ENCORE BEVERAGE	8550 W 4TH ST	RENO	NV	895238917	775-742-4814
GREAT BASIN BREWING CO	5525 S VIRGINIA ST	RENO	NV	89502	775-355-7711
LUCE & SON INC	2399 VALLEY RD	RENO	NV	895121606	775-785-7810
MCGEE AND MCGEE WINE MERCHANTS	3550 BARRON WAY	RENO	NV	895111851	775-884-1767
NEW WEST DISTRIBUTING INC	127 WOODLAND AVE	RENO	NV	895238910	775-355-5500
SILVER PEAK RESTAURANT & BREWERY	124 WONDER ST	RENO	NV	89502	775-321-1864
CROWN BEVERAGES	1650 LINDA WAY	SPARKS	NV	894316159	775-358-2428
EGG NOG LLC	2225 E GREG ST #108	SPARKS	NV	894317153	775-827-4447
GREAT BASIN BREWING CO	846 VICTORIAN AVE	SPARKS	NV	894315077	775-355-7711
MORREY DISTRIBUTING COMPANY INC	1850 E LINCOLN WAY	SPARKS	NV	894348944	775-352-6000
SIERRA WINE & SPIRITS INC	1201 INDUSTRIAL WAY	SPARKS	NV	894316033	775-355-0490
SOUTHERN WINE & SPIRITS SPARKS	960 UNITED CIRCLE	SPARKS	NV	89431	775-355-4500
WIRTZ BEVERAGE NEVADA RENO INC	100 DISTRIBUTION DR	SPARKS	NV	894415206	775-331-3400
WADE DISTRIBUTING	300 W 2ND ST	WINNEMUCCA	NV	894453303	775-623-3232
TAHOE SIERRA DISTRIBUTING CO	316 HWY 208	YERINGTON	NV	89447	775-463-5356
VALLEY BEVERAGES INC	123 MACKENZIE LN	YERINGTON	NV	894479515	775-463-2922

CARSON CITY FIRE DEPARTMENT

"Service with Pride, Commitment, Compassion"

Fire Prevention Planning Guide
For
Special Events

This guide outlines the fire safety requirements found in the 2012 International Fire Code (IFC) with Northern Nevada Amendments. The Carson City Fire Department (CCFD) is committed to insuring safety for all vendors and participants at community events and have created this guide for your use. Utilizing information in this guide will help you host an organized event with minimal last minute disruptions to correct code violations.

This guide summarizes fire safety requirements to be used by event promoters and/or permit applicants. This guide is a tool to be used by an event planner to prepare your Fire Prevention Permit Application and to advise vendors of the fire safety requirements for the event. In CCFD review of the permit application you may be advised of necessary additions and/or requirements that must be met before the event occurs.

Not all sections of this pamphlet apply to every event. You only need to be concerned with the sections that cover the activities in your event. An example is tents. If you event doesn't involve a tent, you can disregard that section.

The 2012 International Fire Code applies to all events permitted or unpermitted.

When is a Fire Prevention Permit required in addition to the City Special Event Permit?
A permit is required when any of the following are proposed to operate

- TENT (10'x10' pop up style tents are exempt)
- USE OF OPEN FLAME
- PYROTECHNICS/FIREWORKS

How do I apply for a permit?

- City Special Event Permit applications can be obtained at the Special Event/Business License Office located in the Carson City BRIC at 108 E. Proctor Street in Carson City or from the City's website at http://www.carson.org under the Business License page.
- Call the CCFD Fire Prevention Division at 775-887-2210 to apply if your event requires a fire department permit if you are using pyrotechnics, open flames, or large tents. See section 14 of the guide for more info on tents.

777 S. Stewart Street, Carson City, Nevada 89701
Business Phone (775) 887-2210 • Fax (775) 887-2209 • www.carsonfire.org

When will I receive my fire department permit?

- You will be contacted by a fire inspector to schedule a fire inspection for your fire permit prior to the opening of your event. There may be additional inspections conducted in the duration of the permit to confirm continued compliance with conditions as approved.
- Once your fire inspection is complete and any violations corrected you will be issued your Fire Prevention Permit. Your permit will only be valid during dates listed on the permit. An extension of the permit may only be granted by request with possible additional inspections by CCFD.
- Your permit must be posted on-site for the duration of your event.
- Any permit issued may be suspended or revoked by CCFD if the conditions of the permit have been violated OR any false statement or misrepresentation of information provided in the application or plans from which the permit issuance was based were made.

Table of Contents

1. Site & Seating Plans
2. Candles, Heaters and Open Flames
3. Combustible Materials
4. Cooking and Food Warming Equipment
5. Decorative Materials
6. Electrical
7. Occupant Load
8. Seating Arrangement
9. Exiting and Aisle Widths
10. Portable Fire Extinguishers
11. Flame Retardants and Fire Resistive Materials
12. Propane (LPG) Use
13. Exhibit Booths and Sales Displays
14. Tents and Canopies
15. Tents and Canopies used for Cooking
16. Vehicle Display and/or Parking
17. Fenced events-Beer Gardens and Concerts
18. Pyrotechnics

Section 1 Outside event Site & Seating Plans

☐ Planners with events that require a permit must attach a scaled and detailed floor or site plan to the permit application.

The plans must show the following (if applicable):

- Location and width of all stages, platforms, physical structures, fences, exit doors, aisles in large exhibitor areas, and the main event aisle ways.
- Seating arrangement-including any tables and chairs.
- Location, size, and identification number of exhibits, booths, cooking booths, and other display spaces.
- Location and size of propane (LPG) containers and/or helium tanks.
- Location and width of the fire lanes and the location of fire hydrants.
- Distance from tents to property lines, fences, and structures.
- Location of fire extinguishers, egress lighting, and exit signs.
- Description of decorations (i.e. draping, balloons, misc. decorations, etc.)
- Vehicle layout (for vehicle displays)
- Location of dumpsters and waste receptacles.
- Designated smoking areas (if provided)

Section 2 Candles, Heaters and Open Flames

☐ Candles, heaters and other open flame devices add ambience and comfort to a special event but must be used with extra caution. Listed below are safe permitted uses of candles, heaters and open flames. **The use of open flame requires a separate fire department permit.**

- Hand held candles shall not be passed from one person to another while lighted.
- Flammable liquid (canned heat) used for food preparation is limited to 1 oz. containers or 1 quart containers with a controlled pouring device that limits flow to 1 oz. serving.
- If food preparation is being done at a table where guests are seated, a wet towel must be readily available to smother a possible fire or cool a burn.
- Use approved liquid or solid fuel non-spill containers for decorative lighting. Secure to prevent overturning. Decorative shades must be non-combustible.
- Class I and II flammable liquids (i.e. kerosene and gasoline) and propane shall not be used for decorative or lighting purposes indoors of in tents or under canopies.
- Only electrically powered portable heating equipment with high limit/tip-over protection may be used in buildings, tents and canopies.
- Patio/umbrella type heaters (gas or electric) are allowed for outside venues as long as they maintain clearance from combustibles per listing and are secured to prevent tipping. Must be located at least 5' from buildings and exits or exit discharges.

Section 3 Combustible Materials

- ☐ Combustible merchandise being displayed should be limited to a reasonable quantity.
- ☐ Waste materials, such as empty cardboard boxes and packing materials, must be removed from the exhibit area daily.

Section 4 Cooking & Food Warming Equipment

☐ If cooking is approved for your event, you must use an approved appliance and provide adequate number and type of fire extinguishers. A minimum 2A: 10 BC portable fire extinguisher and wet towel are to be available in each cooking area. A Type K portable fire extinguisher must be available if deep fat frying or woks are used. Additional requirements must be met for cooking in tents, canopies or booths see Section 15.

- Gas fired appliances shall be placed on a non-combustible surface. If the manufacturer's instructions require the equipment to be vented to the outside, it must be done.
- Propane/butane is prohibited to be used indoors
- Multi-well deep fat frying equipment is prohibited unless an approved self-contained hood, ventilation, and suppression system is provided.
- Single-well cooking equipment using cooking oils shall:
  1. Have lids for immediate use to cover and smother a fire
  2. Be limited to 288 sq. inches of cooking surface
  3. Be placed on a non-combustible surface
  4. Be separated from other single-well cooking equipment by a minimum horizontal distance of 2 ft.

*****Any cooking device that is indoors, in a trailer, and/or in a combustible booth and creates grease-laden vapors shall be provided with an approved hood and extinguishing system, or be the type with a self-closing lid or other form of self-extinguishment approved by CCFD.**
All hood ventilating systems are required to be installed in accordance with the International Mechanical Code and be cleaned prior to the start of the event and as often as needed to prevent the build-up of grease during the event.

Section 5 Decorative Materials Decorative materials are typically used to make a sales area more appealing to customers. Many of the combustible items used such as wood lath, decorative fabric and plastic or foam signs, are a fuel source for fast developing fires. The following requirements apply to indoor decorative materials:

- Combustible decorative materials, excluding table covers, shall be flame resistant. Wood less than 1/4" thick shall be treated with a flame-retardant coating.
- Foam plastic objects including mannequins, murals, and signs shall cover less than 10% of a wall, ceiling, or floor area.
  ***Note**: If the material is not flame resistant, fire retardant products can be purchased and applied to the material by the vendor or by a professional.*

Section 6 Electrical

Safe use of electrical cords will keep your event's power need running without interruption. For examples of approved cords please see Appendix page 10. The following are specific requirements for the use of extension cords and power strips/taps:

- Residential type (small gauge cord) extension cords are not allowed to be used. Extension cords shall be a minimum 14 gauge, three conductor size with polarized or grounded plug and receptacle.
- Home-made or spliced cords are not to be used.
- Extension cords may be used when plugged directly into outlet. Chaining of cords or power strips is prohibited.
- Multi-plug adapters (i.e. cube adapters) are not allowed in commercial or temporary occupancies.
- Relocatable power taps (power strips) may be used when plugged directly into outlet and equipped with a built in circuit breaker.
- Extension cords used outdoors must be plugged into a GFCI protected outlet.
- Protect cord if it will be subject to foot traffic or unusual weight or tension. Cords may be protected by plastic (office style) cord covers or wood constructed (ramp style). Duct tape may be used to secure a cord if it is placed perpendicular across the cord not horizontally covering the cord.

An electrical permit is required if temporary electrical service or equipment is installed. Contact the Building Department for electrical permit information.

Section 7 Occupant Load A building used for exhibits, entertainment, feeding or instructing more than 49 people shall be assigned an occupant load. It is the responsibility of the promoter and the building owner to ensure that the maximum number of people allowed in an area is not exceeded.

- Established occupant load limits shall be maintained by the facility. An occupant load sign (issued by CCFD or Carson City Building Div.) may be required to be posted.
- A means to monitor the occupant load in a room shall be used. One approved method is to use hand-held counters to track incoming and outgoing people.
- Standby personnel may be required for the sole purpose of maintaining occupant load limits.

Section 8 Seating Arrangements

For events with large numbers of people and chairs or chairs and tables, seating plans shall be included in your Site & Seating Plan (Section 1). Adequate exiting must be provided when developing seating plan.

- When using over 200 chairs, the chairs must be bonded together in groups of three or more.
- Minimum distance between front/back of folding chairs is 12" measured from the front edge of the seat to the back edge of the seat back in front of it.

Section 9 Exiting and Aisle Widths

Adequate exits must be provided for all events.

- Aisles and exits shown on approved site or floor plans must be kept clear and free of obstructions at all times.
- Easels, signs, displays, etc. must not be placed in the aisles or exit paths from all areas of the event.

- Exits and aisles may only be used for exiting. No displays, tables or other objects may be placed in hallways or exits.
- Provide minimum 48” aisles for exiting when using over 200 chairs and 40” aisles for 200 chairs or less.

Section 10 Portable Fire Extinguishers

Portable fire extinguishers are required at all events. A fire extinguisher is an effective means to extinguish a small fire but must only be used by a person who is confident in their abilities to use it safe and effectively. Most commercial buildings will have fire extinguishers distributed throughout however additional ones may be required depending upon your event use of the building. Note fire extinguisher locations on your site plan when applying for permit. Meet the extinguisher requirements for your type of event.

To provide adequate fire extinguisher coverage the following must be met:

- At least one minimum 2A: 10 BC portable fire extinguisher must be provided.
- A minimum 2A: 10 BC extinguisher is required if an open flame and/or cooking will be present. Extinguisher must be located within 30’ of the cooking activity.
- A minimum 3A: 40 BC extinguisher must be provided when a generator is in use. Extinguisher must be located in the vicinity of the generator at all times generator is operating.
- Extinguishers shall have a current service tag (serviced within the last 12 months).
- Place extinguishers adjacent to exits and/or in the paths of egress.
- Promoter/planner may require each booth/vendor to provide an extinguisher for their area ***or*** extinguishers must be provided with maximum travel distance of 75’ (unless otherwise required by CCFD) from any point in the event space.
- Extinguishers must be located in plain sight, mounted so that the top of the extinguisher is no higher than 5’ above the floor.
- Notify vendors/booth operators of the locations of fire extinguishers.

Section 11 Flame Retardants and Fire Resistive Materials

Flame retardants are used to treat a variety of materials to inhibit the spread of fire. Some materials, such as most plastic tarps, cannot be treated with flame retardants unless done by the manufacturer. Products treated with flame retardants must bear proof of treatment and provided to the fire inspector upon request. Proof of treatment may consist of providing a copy of the product label or specification sheet and/or verification that the product was applied according to manufacturers specifications.

Fire resistive materials/products must bear label from manufacturer indicating it meets fire resistive standards.

Section 12 Propane (LPG) Use

LPG may not be used indoors.

For outdoor use the following requirements must be met:

- LPG tanks may only be located on the exterior of buildings, booths, portable concessions or tents.
- LPG tanks shall be a minimum of 10 feet from combustible vegetation and trash containers.
- LPG tanks shall be located a minimum of 20 feet from a potential ignition source
- LPG tanks shall be located so they are not in contact with direct flame, high heat situations or sparks.
- LPG tanks must be secured from falling. Method of securing tank must be sturdy and capable of preventing tank movement.

Section 13 Exhibit Booths and Sales Displays

- The travel distance within a booth or vendors exhibit area to an accessible exit aisle shall not exceed 50’.
- Booths, tables and display areas shall be clearly defined so exhibits do not encroach into aisles and exits.
- Booths, displays and products must not block exit doors, electrical panels, roll up fire doors, fire alarm pull stations or sprinklers.
- Keep combustibles at least 36” from heat sources.

Section 14 Tents and Canopies

<u>Tents with at least one side panel exceeding 400 sq. feet and tents with no side panels exceeding 700 sq. feet require a separate Fire Prevention Permit.</u> <u>The permit application must include a site and seating plan.</u>

Tents must meet the following requirements:

- Tents are not allowed inside a structure.
- Tents shall maintain a distance of 20' from structures, property lines or right of ways. For the purpose of determining required distances, support ropes and guy wires are considered part of the tent or canopy.
- Tents shall be roped, braced and anchored.
- Tents must be made of fire resistant material (must bear label from manufacturer indicating so) or be treated with an approved flame retardant.
- Decorative materials used in tents shall be flame retardant.
- Post NO SMOKING signs inside and or outside tent.
- When multiple tents are arranged or set side by side, the aggregate length shall not exceed 150 feet without a 20 foot fire break.
- A distance of 20 feet shall be maintained between cooking tents/canopies/booths and non-cooking tents/canopies/booths and other structures*.
- Outdoor cooking that produces sparks or grease laden vapors shall not be performed within 20' of a tent. **Exception**: Cooking appliances with approved ventilation.
- No open flame devices are allowed inside tents. For cooking in tents see requirements in Section 15.
- Provide one minimum 2A: 10 BC fire extinguisher for every 3,000 square feet of floor area. See Section 10 for additional fire extinguisher requirements.
- Provide minimum 12' clearance around all sides of tents and canopies unless arranged or set side by side*.
- Maximum distance to an exit shall not exceed 100'
- Exit signs are required when the occupant load is 50 or more. Exits must be spaced evenly around the tent perimeter. For assistance in determining your occupant load contact CCFD.
- When required, provide exits signs above each exit. For occupant capacity over 100 exit signs must be illuminated and provided with a back-up power supply.
- Overnight sleeping is not allowed in Tents

*Separations may be reduced to 10' under special consideration as approved by CCFD.

<u>Section 15 Tents used for Cooking</u>

In addition to the requirements in Section 15, tents used for cooking must met the following requirements:

- Cooking Booths must have 10' clearance on two sides.
- Provide a minimum 4A: 40 BC fire extinguisher. See Section 10 Portable Fire Extinguishers for additional requirements that may apply.
- Cooking and heating equipment must be kept a minimum of 10' from exit or exit aisles and any combustible materials.
- Appliances with open-flame cook tops, fryers; skillet frying and woks *shall not* be located inside a tent with sides. Such appliances *may* be located under a tent with no sides if the appliance is equipped with adequate venting to release cooking related by-products from under the tent to the outside.
- Propane tanks must be placed and/or stored at least 10' from booths, tents and canopies. All tanks must be secured from falling and not subject to extreme heat or open flame.
- Hay, straw, and similar combustible materials shall not be stored inside or within 30' of a tent or canopy used for cooking or public assembly.

<u>Section 16 Vehicle Display and/or Parking</u>

Indoor display of vehicles, boats and recreational vehicles shall comply with the following:

- Batteries shall be disconnected. **Exception**: electric hybrid vehicles.
- Vehicle shall not block or obstruct exits
- Fuel tanks shall be locked or sealed (may use duct tape).
- Fuel tanks shall be no more than ¼ full or contain no more than 5 gallons of fuel.
- Fueling or de-fueling shall not be done inside a building or tent.

Section 17 Fenced Events- Beer Gardens and Concerts

Fenced events shall meet the following requirements:

- Fenced areas with an occupant load of more than 50 people require at least two exits. Additional exits may be required depending upon the occupant load
- Post occupant load sign (will be provided by CCFD)
- Exits shall not be chained or locked and must be easily opened from the inside fenced area.
- Exits shall be marked with an exit sign.
- Egress and emergency lighting may be required at night or after sunset.
- Exit doors, gates shall swing in the direction of egress travel.
- Fencing must be adequately secured to the ground

Section 18 Pyrotechnics

The use of public display fireworks is highly regulated whether indoors or outdoors and a separate Fire Department permit is required. The use of a Nevada State Fire Marshal licensed pyrotechnic company is required. The 2012 IFC and current edition of NFPA 1123 must be followed. Only electrically fired pyrotechnics are allowed.

- Copy of current Carson City NV business license.
- Scaled site plan indicating launch site and fallout zone. North must be indicated.
- Copies of current NV State Fire Marshal pyro technician registration cards.
- Copies of any relevant current BATFE licenses for transport or manufacture of pyrotechnics.
- Product list indicating type and diameter (in inches) of ALL products to be shot.
- Timeline of product movement, site set up, and shoot to include arrival/departure times and locations. Pyrotechnics are not allowed to be stored within the boundaries of Carson City.
- Contact list for pyro technician, key event staff to include names, phone numbers, and email.
- Certificate of Insurance from pyro technician showing City of Carson City as additional insured. Minimum amount of each occurrence shall be $1,000,000. The minimum aggregate amount shall be $2,000,000.
- Pyrotechnic safety plan
- Racking plan and layout. Specify rack materials, tube materials and size.

SAMPLE GENERAL LIABILITY INSURANCE CERTIFICATE

ACORD®

CERTIFICATE OF LIABILITY INSURANCE

DATE (MM/DD/YYYY): Current Date

THIS CERTIFICATE IS ISSUED AS A MATTER OF INFORMATION ONLY AND CONFERS NO RIGHTS UPON THE CERTIFICATE HOLDER. THIS CERTIFICATE DOES NOT AFFIRMATIVELY OR NEGATIVELY AMEND, EXTEND OR ALTER THE COVERAGE AFFORDED BY THE POLICIES BELOW. THIS CERTIFICATE OF INSURANCE DOES NOT CONSTITUTE A CONTRACT BETWEEN THE ISSUING INSURER(S), AUTHORIZED REPRESENTATIVE OR PRODUCER, AND THE CERTIFICATE HOLDER.

IMPORTANT: If the certificate holder is an ADDITIONAL INSURED, the policy(ies) must be endorsed. If SUBROGATION IS WAIVED, subject to the terms and conditions of the policy, certain policies may require an endorsement. A statement on this certificate does not confer rights to the certificate holder in lieu of such endorsement(s).

PRODUCER	CONTACT NAME: Agent, Broker or Carrier Contact Information	
Name and Address of Producing Broker or Agent	PHONE (A/C, No, Ext):	FAX (A/C, No):
	E-MAIL ADDRESS:	
	INSURER(S) AFFORDING COVERAGE	NAIC #
	INSURER A : Full Name of Insurance Company	#####
INSURED	INSURER B :	
Full Name and Address of Company (must match company name on contract or other written agreement, including DBA when applicable)	INSURER C :	
	INSURER D :	
	INSURER E :	
	INSURER F :	

COVERAGES **CERTIFICATE NUMBER:** **REVISION NUMBER:**

THIS IS TO CERTIFY THAT THE POLICIES OF INSURANCE LISTED BELOW HAVE BEEN ISSUED TO THE INSURED NAMED ABOVE FOR THE POLICY PERIOD INDICATED. NOTWITHSTANDING ANY REQUIREMENT, TERM OR CONDITION OF ANY CONTRACT OR OTHER DOCUMENT WITH RESPECT TO WHICH THIS CERTIFICATE MAY BE ISSUED OR MAY PERTAIN, THE INSURANCE AFFORDED BY THE POLICIES DESCRIBED HEREIN IS SUBJECT TO ALL THE TERMS, EXCLUSIONS AND CONDITIONS OF SUCH POLICIES. LIMITS SHOWN MAY HAVE BEEN REDUCED BY PAID CLAIMS.

INSR LTR	TYPE OF INSURANCE	ADDL INSD	SUBR WVD	POLICY NUMBER	POLICY EFF (MM/DD/YYYY)	POLICY EXP (MM/DD/YYYY)	LIMITS	
A	✓ COMMERCIAL GENERAL LIABILITY			Policy Number	Effective Date of Policy	Expiration Date of Policy	EACH OCCURRENCE	$ 1,000,000
	☐ CLAIMS-MADE ✓ OCCUR						DAMAGE TO RENTED PREMISES (Ea occurrence)	$ 100,000
		Y					MED EXP (Any one person)	$
							PERSONAL & ADV INJURY	$
	GEN'L AGGREGATE LIMIT APPLIES PER:						GENERAL AGGREGATE	$
	✓ POLICY ☐ PRO-JECT ☐ LOC						PRODUCTS - COMP/OP AGG	$
	OTHER:							$
	AUTOMOBILE LIABILITY						COMBINED SINGLE LIMIT (Ea accident)	$
	☐ ANY AUTO						BODILY INJURY (Per person)	$
	☐ ALL OWNED AUTOS ☐ SCHEDULED AUTOS						BODILY INJURY (Per accident)	$
	☐ HIRED AUTOS ☐ NON-OWNED AUTOS						PROPERTY DAMAGE (Per accident)	$
								$
	☐ UMBRELLA LIAB ☐ OCCUR						EACH OCCURRENCE	$
	☐ EXCESS LIAB ☐ CLAIMS-MADE						AGGREGATE	$
	☐ DED ☐ RETENTION $							$
	WORKERS COMPENSATION AND EMPLOYERS' LIABILITY						☐ PER STATUTE ☐ OTH-ER	
	ANY PROPRIETOR/PARTNER/EXECUTIVE OFFICER/MEMBER EXCLUDED? Y / N ☐ (Mandatory in NH)	N / A					E.L. EACH ACCIDENT	$
	If yes, describe under DESCRIPTION OF OPERATIONS below						E.L. DISEASE - EA EMPLOYEE	$
							E.L. DISEASE - POLICY LIMIT	$

INFORMATION ONLY

DESCRIPTION OF OPERATIONS / LOCATIONS / VEHICLES (ACORD 101, Additional Remarks Schedule, may be attached if more space is required)

SAMPLE WORDING ONLY
Certificate Holder, including its officers, employees and agents, are included as Additional Insureds under General Liability as their interests may appear with respect to the operations of the Named Insured at (Event Name) held at (Event Location) scheduled for (Event Dates to include set-up and tear-down). Policy form (or endorsement ###### is attached confirming additional insured status.

CERTIFICATE HOLDER

Carson City Consolidated Municipality
City of Carson City, NV
201 N. Carson St.
Carson City, NV 89701

CANCELLATION

SHOULD ANY OF THE ABOVE DESCRIBED POLICIES BE CANCELLED BEFORE THE EXPIRATION DATE THEREOF, NOTICE WILL BE DELIVERED IN ACCORDANCE WITH THE POLICY PROVISIONS.

AUTHORIZED REPRESENTATIVE

Signature of Authorized Representative

© 1988-2014 ACORD CORPORATION. All rights reserved.